MASCOT® FT

Residential Hydronic Combination Boiler

MFTCF	Floor Standing, Combination

Boiler / Water Heater

Indoor, Sizes 140, 199

Submittal Data

LAARS® Heating Systems Company

Date:

Project #:

Engineer:

Prepared By:

Bid Date:

Project Name:

Location:

Contractor:

Standard Equipment

- High condensing efficiency 95% AFUE
- Low pressure drop, fire tube heat exchanger design
- Full modulation
  - •140MBH: 100% down to 20% of full fire (5:1 turndown)
  - •199MBH: 100% down to 10% of full fire(10:1 turndown)
- Sealed combustion chamber
- Pre-mix ceramic fiber burner
- Low NOx system exceeds the most stringent regulations for air quality – 17ppm NOx
- Horizontal or vertical direct vent
- Vent and air pipe lengths of up to 100 equivalent feet (each)
- Stainless steel heat exchanger with finned aluminum core fire tubes, welded construction
- ASME 30 psi (207kPa) working pressure heat exchanger
- ASME "H" stamp
- Inlet DHW filter
- Vent with PVC, CPVC or Polypropolene
- Natural gas or propane
- 30 psi (207kPa) ASME pressure relief valve
- Low lead compliant
- Gas leak detection
- Stainless Steel DHW indirect tank storage heat exchanger with priority for on-demand hot water
- Boiler pump wired and mounted inside jacket
- Built-in condensate trap and drain, priming not required
- Automatic air vent
- Pressure gauge
- Boiler water pressure switch
- Blocked vent pressure switch
- Blocked condensate pressure switch
- Burner site glass
- Electronic PID modulating control
- Direct spark ignition
- Customizable Freeze Protection
- Anti-short cycling
- Large user-interface and display
- Accepts external (0-10VDC) temperature setpoint signal
- Outdoor reset (sensor included)
- Outdoor air reset curve
- Manual reset high limit
- Wall mount bracket
- Field convertible between natural gas and propane
- 10-Year limited warranty

Boiler Data

Number of Units:

Fuel

☐ Natural*

Options

☐ Low Water Cut-off (shipped loose)

*Boilers shipped set up for use with Natural Gas and includes a Propane conversion kit.

Intertek · ASME H · ENERGY STAR · AHRI CERTIFIED www.ahridirectory.org Ask About Our Certified Products

Sizing Data

Model	Input		Output		AFUE	Gas Conn. Size	Heating Supply & Return Conn. Size	DHW Conn. Size	Shipping Weight
	BTU/h	*kW*	**BTU/h**	*kW*		inches	inches	inches	**lbs** *kg*
MFTCF140	**140,000**	*41*	**133,000**	*39*	95%	1/2* NPT	1 NPT	3/4 NPT	**230** *104*
MFTCF199	**199,000**	*58*	**189,050**	*55*	95%	3/4 NPT	1 NPT	3/4 NPT	**242** *110*

NOTES:

1. For other boiler ratings:
Boiler Horsepower: HP = Output / 33,475 Radiation Surface: EDR sq. ft. = Output / 150

*3/4" Coupling included with installation kit.

Domestic Hot Water Capacity

Model	35°F Rise	45°F Rise	77°F Rise	Stored DHW
	GPM *l/m*	**GPM** *l/m*	**GPM** *l/m*	**Gallons** / *liters*
MFTCF140	**7.1** *27*	**5.5** *21*	**3.2** *12*	**3.0** *11.3*
MFTCF199	**9.9** *38*	**7.7** *29*	**4.8** *18*	**3.0** *11.3*

Clearances

APPLIANCE SURFACE	SUGGESTED SERVICE ACCESS CLEARANCE **INCHES**	*CM*
Left Side	**6**	*15*
Right Side	**26**	*64*
Top	**15**	*38*
Back	**5/8**	*1.6*
Front	**40**	*101*
Bottom	**0**	*0*

Electrical Data

Size	Boiler		
	Volts	Phase	Amps
MFTCF140	120	Single	6
MFTCF199	120	Single	6

* Minimum 15A circuit required

Vent System

INTAKE / EXHAUST Max Equivalent Vent and Air Pipe Length (each)						
	STANDARD 2-PIPE			STANDARD 2-PIPE		
SIZES	DIA.	**FT.**	*m*	DIA.	**FT.**	*m*
140 & 199	2" *	**50****	*15.2*	3"	**100**	*30.5*

* Must use 3x2 adaptor within 1ft (3cm) of boiler. Reference the Installation and Operation Manual for more details.

**Propane models are limited to 25 equivalent feet of 2" vent.

Dimensional Data

MFTCF140

Note; The greatest installation difference between the MFTCF140 and MFTCF199, other than general output capability (BTU's), is that the air inlet and exhaust vent are opposite.

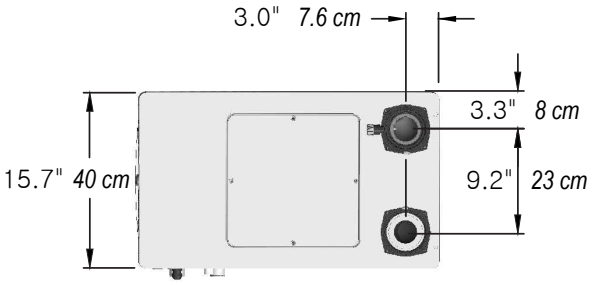

TOP

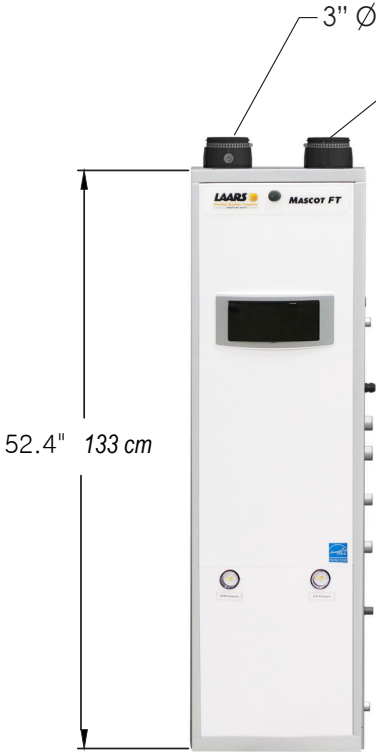

FRONT

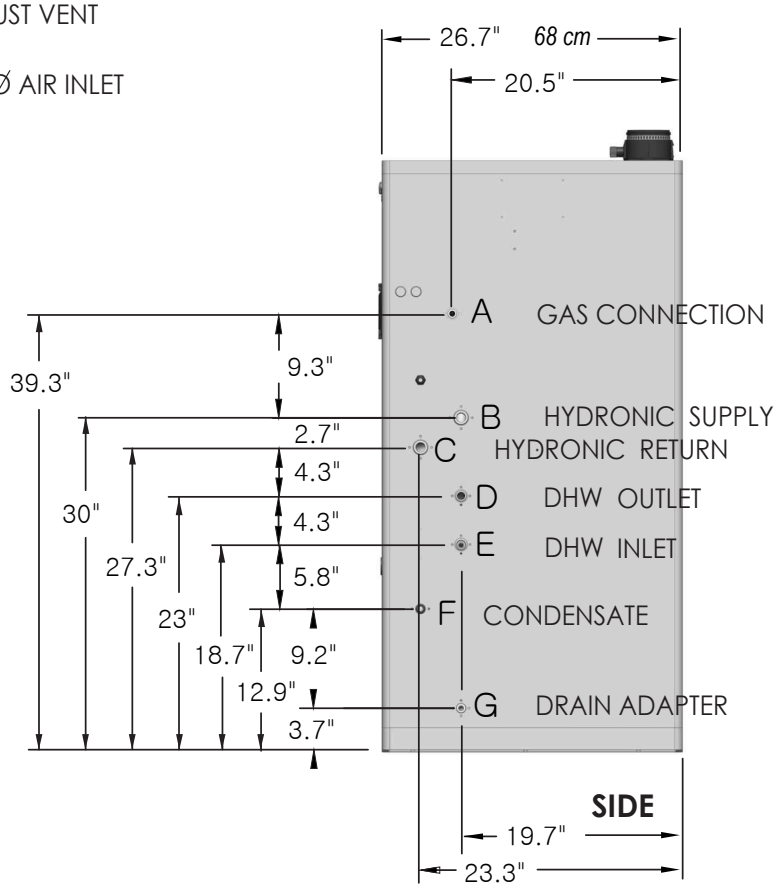

SIDE

	Description	Diameter
A	Gas Connection Adapter*	1/2" NPT
B	'CH supply' Connection Adapter	1" NPT
C	'CH return' Connection Adapter	1" NPT
D	'DHW outlet' Connection Adapter	3/4" NPT
E	'DHW inlet' Connection Adapter	3/4" NPT
F	Condensate Adapter	1/2" NPT
G	Drain Adapter	1/2" NPT

*3/4" Coupling included with installation kit.

MFTCF199

Note; The greatest installation difference between the MFTCF140 and MFTCF199, other than general output capability (BTU's), is that the air inlet and exhaust vent are opposite.

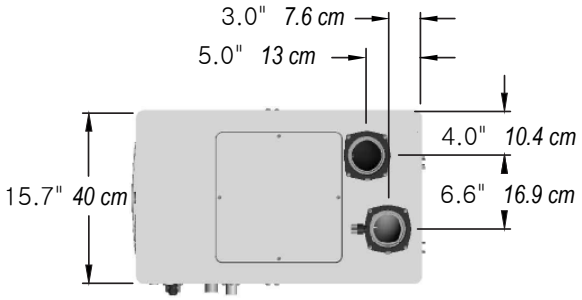

TOP

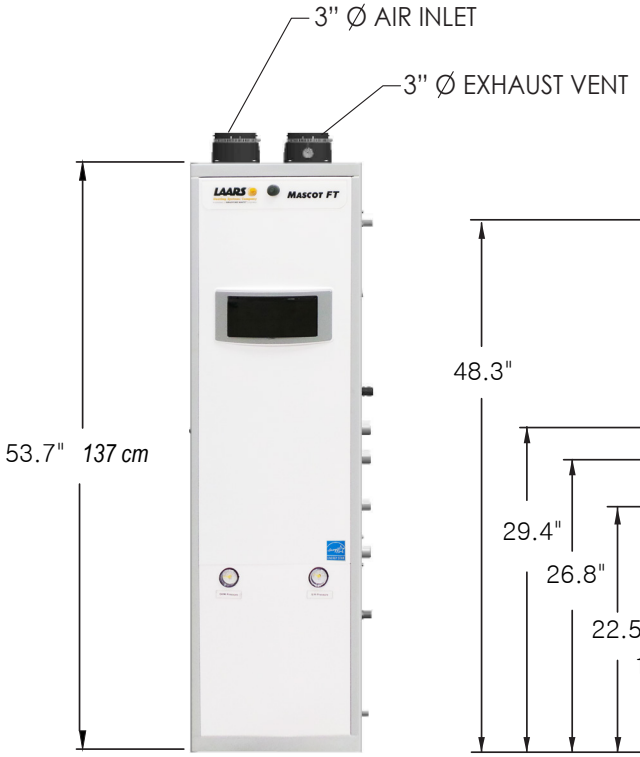

FRONT

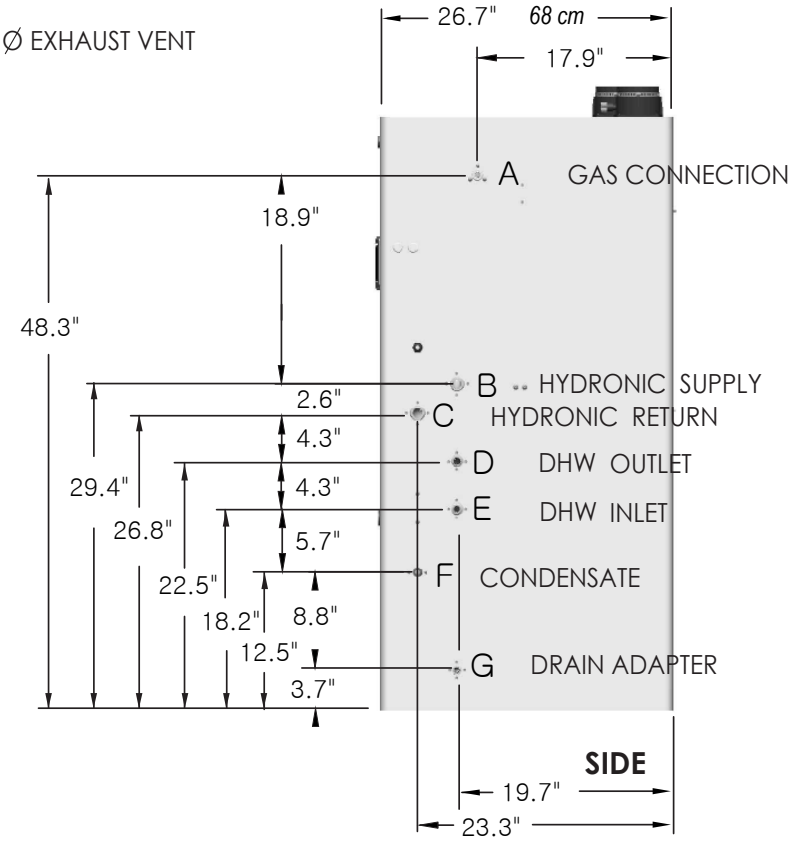

SIDE

	Description	Diameter
A	Gas Connection Adapter	3/4" NPT
B	'CH supply' Connection Adapter	1" NPT
C	'CH return' Connection Adapter	1" NPT
D	'DHW outlet' Connection Adapter	3/4" NPT
E	'DHW inlet' Connection Adapter	3/4" NPT
F	Condensate Adapter	1/2" NPT
G	Drain Adapter	1/2" NPT

LAARS® Heating Systems Company
A subsidiary of BRADFORD WHITE® Corporation

Customer Service and Product Support: **800.900.9276 • Fax 800.559.1583**
Headquarters: **20 Industrial Way, Rochester, NH, USA 03867 • 603.335.6300 • Fax 603.335.3355**
9 Brigden Gate, Halton Hills, Ontario, Canada L7G 0A3 (905) 203-0600 Fax: (905) 636-0666
www.Laars.com

Litho in U.S.A. © Laars Heating Systems 1808 Document 1326B