Installation and Operation Instructions for

NEOTHERM® LC

Modulating Boiler	Water Heater
Model NTH1000	Model NTV1000
1,000 MBTU/h	1,000 MBTU/h
Model NTH1700	Model NTV1700
1,700 MBTU/h	1,700 MBTU/h

FOR YOUR SAFETY: This product must be installed and serviced by a professional service technician, qualified in hot water boiler and heater installation and maintenance. Improper installation and/or operation could create carbon monoxide gas in flue gases which could cause serious injury, property damage, or death. Improper installation and/or operation will void the warranty.

⚠ WARNING

If the information in this manual is not followed exactly, a fire or explosion may result causing property damage, personal injury or loss of life.

Do not store or use gasoline or other flammable vapors and liquids in the vicinity of this or any other appliance.

WHAT TO DO IF YOU SMELL GAS

- **Do not try to light any appliance.**
- **Do not touch any electrical switch; do not use any phone in your building.**
- **Immediately call your gas supplier from a nearby phone. Follow the gas supplier's instructions.**
- **If you cannot reach your gas supplier, call the fire department.**

Installation and service must be performed by a qualified installer, service agency, or gas supplier.

⚠ AVERTISSEMENT

Assurez-vous de bien suivres les instructions données dans cette notice pour réduire au minimum le risque d'incendie ou d'explosion ou pour éviter tout dommage matériel, toute blessure ou la mort.

Ne pas entreposer ni utiliser d'essence ni d'autres vapeurs ou liquides inflammables dans le voisinage de cet appareil ou de tout autre appareil.

QUE FAIRE SI VOUS SENTEZ UNE ODEUR DE GAZ:

- **Ne pas tenter d'allumer d'appareils.**
- **Ne touchez à aucun interrupteur. Ne pas vous servir des téléphones dansle bâtiment où vous vous trouvez.**
- **Appelez immédiatement votre fournisseur de gaz depuis un voisin. Suivez les instructions du fournisseur.**
- **Si vous ne pouvez rejoindre le fournisseur de gaz, appelez le sservice des incendies.**

L'installation et l'entretien doivent être assurés par un installateur ou un service d'entretien qualifié ou par le fournisseur de gaz.

H2352900B

LAARS® Heating Systems Company
A subsidiary of BRADFORD WHITE® Corporation

Table of Contents

Section 1
GENERAL INFORMATION 1
1.1 Introduction 1
1.2 About the Touch Screen 1
1.3 Safety Notes 3
1.4 Model Identification / Nomenclature 3
1.5 Warranty 4
1.6 Appliance Overview 4
1.7 Dimensions 6
1.8 Unpacking 6

Section 2
LOCATING THE APPLIANCE 8
2.1 Locating the Appliance 8
2.2 Correct Vent Distance from Outside Wall or Roof Termination 8

Section 3
VENTING AND COMBUSTION AIR 9
3.1 Combustion Air 9
3.1.1 Combustion Air From Room 9
3.1.2 Ducted Combustion Air 10
3.2 Venting 11
3.2.1 Common Venting 11
3.2.3 Venting Requirements Unique to Canada 11
3.3 Locating the Vent and Combustion Air Terminals 12
3.3.1 Side Wall Vent Terminal 12
3.3.2 Side Wall Combustion Air Terminal 14
3.3.3 Vertical Vent Terminal 15
3.3.4 Vertical Combustion Air Terminal 15
3.3.5 Installations in the Commonwealth of Massachusetts 15
3.4 Common Vent Test 15
3.5 Outdoor Installation 16
3.6 Condensate Trap 16

Section 4
GAS SUPPLY AND PIPING 17
4.1 Gas Supply and Piping 17
Distance & Pipe Size, Tables 18

Section 5
PUMP REQUIREMENTS 19
5.1 NeoTherm LC Boiler Flow and Head Requirements 20
5.2 NeoTherm LC Water Heater Flow and Head Requirements 19

Section 6
WATER CONNECTIONS 20

Section 6A - NTH Systems 20
6A.1 NTH System Piping: Hot Supply Connections 20
6A.2 NTH Cold Water Make-Up 20
6A.3 NTH Freeze Protection 21
6A.4 NTH Suggested Piping Schematics 21
6A.5 Condensate Trap 21

Section 6B - NTV Systems 27
6B.1 NTV Water Quality 27
6B.2 NTV Piping Requirements 27
6B.3 NTV Cold Water Make-Up 28
6B.4 NTV Freeze Protection 28
6B.5 NTV Suggested Piping Schematics 28
6B.6 NTV Suggested Pumps 29
6B.7 Condensate Trap 29

Section 7
ELECTRICAL CONNECTIONS 30
7.1 Main Power 30
7.2 Pump Connections 30
7.3 24 VAC Transformer with Integral Circuit Breaker 32
7.4 Signal Connections 32
7.5 Optional Field Connections 32
7.6 Ladder Diagrams 33
Wiring Diagrams 34

Section 8
USING THE TOUCH SCREEN AND GAUGES 36
8.1 The Touch Screen and Gauges on the Front of the NeoTherm LC 36
8.2 Using the Touch Screen 36
8.3 While Operating – Checking Lead/Lag Operating Information 38
8.4 Checking Lead/Lag Master 38
8.5 While Operating - Checking Individual Parameters 39
8.6 Checking Individual Details 40
8.7 Configuring Parameters on Individual Controllers 40
8.8 Verification Process for Safety-Related Parameters 41

Section 9 –
SETUP AND CONFIGURATION 44
9.1 Review of Lead/Lag Control System 44
9.1.1 About Lead/Lag Operation 44
9.1.2 Lead/Lag Modulation Cycle 45
9.1.3 NTH Lead/Lag with Indirect Domestic Hot Water..... 46
9.2 Connection Terminals 46
9.3 NeoTherm LC System Configurations .. 46-54
9.4 Installation Jobs..... 55
A Note for Systems Using Common Venting..... 55
B Naming the Controllers..... 55
C Make One Control the Lead/Lag Master..... 56
D Disable the Lead/Lag Master Function on the Lead/Lag Slaves..... 57
E Set up the Modbus Control Addressing .. 58
F Set the Flap Valve IDs 59
G Disconnect Unused Operator Interfaces..... 63
H Connect the Modbus Wiring 63
I Set the Parameters Used by the Lead/Lag System..... 64
About the “Time of Day” Function..... 68
J Install the System Sensor and Adjust the Setpoint 68
K Set the Lead/Lag Outdoor Reset and Warm Weather Shutdown..... 68
About “Outdoor Reset” 69
L Building Automation or Multiple Boiler Control Thermostat Demand 70
M Building Automation or Multiple Boiler 4-20mA Setpoint Control 70
N Building Automation or Multiple Boiler 4-20mA Modulation Control 71
O Combustion Setup Procedure 71
P Setting the Date and Time on the System Display..... 76
9.5 Setup for Domestic Hot Water on a Lead/Lag System..... 77
Setup Type 1..... 77
Setup Type 2..... 78
Setup Type 3..... 79
9.6 Gateway Connections to a Building Automation System..... 80
9.7 Setup for High Altitude Operation - NT 1700 Only..... 80
9.8 Installer Parameters 81-87

Section 10 -
INITIAL STARTUP INSTRUCTIONS 88
10.1 Filling the Boiler System 88
10.2 Initial Operation 89
10.2.1 Initial Burner Operation..... 89
10.2.2 Combustion Setup Procedure 89
10.3 Shutting Down the NeoTherm LC..... 89
10.4 Restarting the NeoTherm LC..... 89

Section 11
MAINTENANCE 90
11.1 System Maintenance 90
11.2 Maintenance Notes..... 90
11.2.1 Burner..... 90
11.2.2 Modulating Gas Valve/ Venturi..... 90
11.2.3 Controllers 91
11.2.4 Ignitor Assembly 91
11.2.5 Flame Sensor 91
11.2.6 Transformer with Integral Circuit Breaker..... 91
11.2.7 Blower..... 92
11.2.8 Heat Exchanger Coils..... 92
11.2.9 Gas Pressure Switches (optional) 92
11.2.10 Natural/Propane Gas Conversion..... 93
11.2.11 Condensate Trap 93
11.2.12 Battery (Date & Time Back-Up) 93

Section 12
TROUBLESHOOTING 94
12.1 Potential Setup and Synchronization Problems 94
12.1.1 Controller Synchronization 94
12.1.2 Flap Valve Status Checks..... 95
12.2 About Lockouts, Holds, and Alerts..... 95
12.2.1 Responding to a Lockout, Hold, or Alert 95
12.2.2 Viewing the Lockout and Alert Histories..... 96
12.3 Troubleshooting Tables (all codes).....98-112
12.4 Diagnostic Tests and Input/Output Indicators 113
12.5 Lead/Lag Slave Diagnostics 114
12.6 Statistics 114
12.7 Analysis 114
12.8 Control Snapshot.....115
12.9 Operating Sequence.....115

Section 13
REPLACEMENT PARTS.....118
13.1 General Information.....118
13.2 Parts List.....118
13.3 Parts Illustrations 124

Section 1
GENERAL INFORMATION

1.1 Introduction

This manual includes information which will help you to install, operate, and maintain the NeoTherm LC 1000 and 1700 systems. Please read this manual completely before proceeding with the installation. If you have any questions regarding this equipment, please consult the LAARS Heating Systems factory, or a local factory representative. Many operating problems are caused by improper installation.

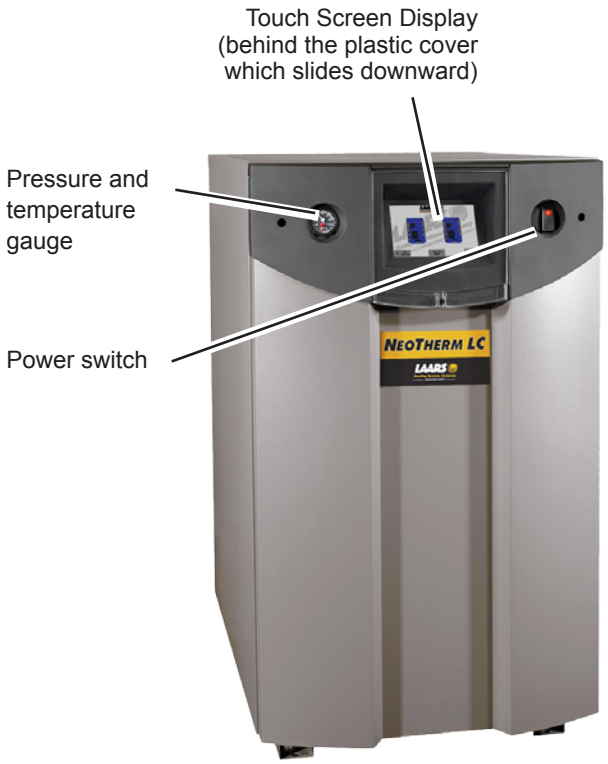

⚠ WARNING

NeoTherm LC units **must** be installed in accordance with the procedures detailed in this manual, or the LAARS Heating Systems warranty will be voided. The installation must conform to the requirements of the local jurisdiction having authority, and, in the United States, to the latest edition of the National Fuel Gas Code, ANSI Z223.1/NFPA54. In Canada, the installation must conform to the latest edition of CSA B149.1 Natural Gas and Propane Gas Installation Code, and/or local codes. Where required by the authority having jurisdiction, the installation of NeoTherm LC boilers must conform to the Standard for Controls and Safety Devices for Automatically Fired Boilers, ANSI/ ASME CSD-1. Any modifications to the boiler, its gas controls, or wiring may void the warranty.

If field conditions require modifications, consult the factory representative before initiating such modifications.

1.2 About the NeoTherm LC Touch Screen Display

The NeoTherm LC has an advanced control system which can perform many functions. This is part of the reason why the NeoTherm LC 1000 or 1700 can deliver such outstanding performance. You can access the control system using the 'Touch Screen Display' (see Section 8). There are several "branches" in the control software, and many different display screens. For clarity, throughout this manual we have made a special effort to show you how to reach each of the important setup and operating functions. We have done this in two ways:

- In many cases, we have shown you the actual touch screen display that you will see while performing a function.
- Sometimes, instead of showing the screens, we have just listed the series of choices you should make in order to reach the section you want.

The arrangement of the control software is actually quite logical, and after you have worked with it a bit, you will not have any problems "finding your way around." We just want to give you some help with the first part of the process, when you are "getting used to" the control system .

Later in this manual, we will detail information on the setup and operating procedures. There are a couple of concepts you will need to understand right from the start.

- Each boiler has two controllers (internal electronic burner controllers) and two burners, as shown in Fig. 1.
- A single Touch Screen is used to communicate with these two controllers.

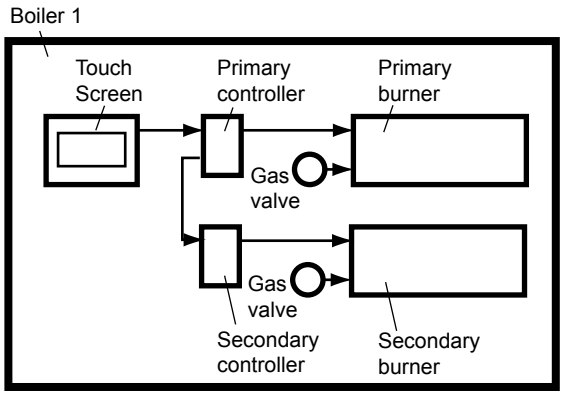

Fig. 1 – Control Arrangement in a Single-Boiler Installation

- Each controller and burner work together. Each boiler includes two of these controller/burner combinations.

  Notice the different terms we are using here. The term ***boiler*** refers to the whole appliance – the complete NeoTherm LC 1000 or 1700. Each boiler includes two separate ***controller/ burner pairs***.
- NeoTherm LC 1000 and 1700 units are always set up for "Lead/Lag" operation. The term "Lead/Lag" means that, as the heating load increases, the control system brings additional burners on automatically.

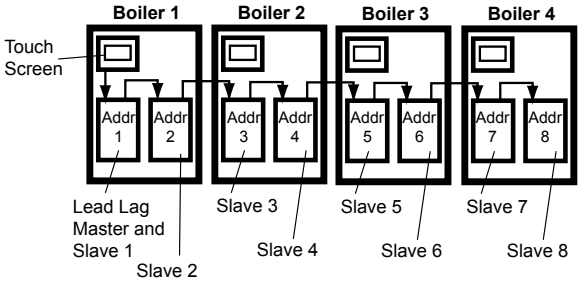

Fig. 2 – Lead/Lag Arrangement in a Multiple-Boiler Installation

On a multiple-boiler installation, each of the individual boilers is still set up as shown in Fig. 1 above, but the controller/burner pairs on all of the boilers are arranged in a "daisy chain."
Up to four boilers, with up to eight controller/burner pairs, can be connected in this way. See Fig. 2.

In all NeoTherm LC multiple-boiler installations, just one of the Touch Screens is active. It can communicate with all of the controller/burner pairs in the system, so it displays information from all of the burners. A single system sensor provides the control input for the system.

All NeoTherm LC's that are set up as a single boiler will still uses a Lead/Lag operation. If the heating load becomes too great for the first burner, the control system automatically starts the second burner.

To work with this control system, you will need to understand the difference between two kinds of control functions:

- SYSTEM FUNCTIONS, Some of the functions control all of the controller/burner pairs, working together as part of the Lead/ Lag system. As an example, the setpoint for a whole multiple-boiler system is set by a single value: "Central Heat Lead/Lag Setpoint."

  By changing this one value, you change the setpoint used by the whole system. The action of all of the controller/burner pairs will refer back to that single value.

  On the Touch Screen, from the 'home' screen you can reach all of the Lead/Lag functions by pressing the View Lead Lag button. See Fig. 3.
- INDIVIDUAL FUNCTIONS, Other functions apply only to each separate controller/burner pair. As an example, each controller/burner has a name, and this can be changed.

  The 'home' screen on the Touch Screen will show icons for each of the controller/burner pairs connected to the system. To reach one of the functions for an individual controller/ burner, press the icon for that controller/ burner. On the following screen, press the Configure button. This will take you to all of the configuration options for that individual controller/burner.

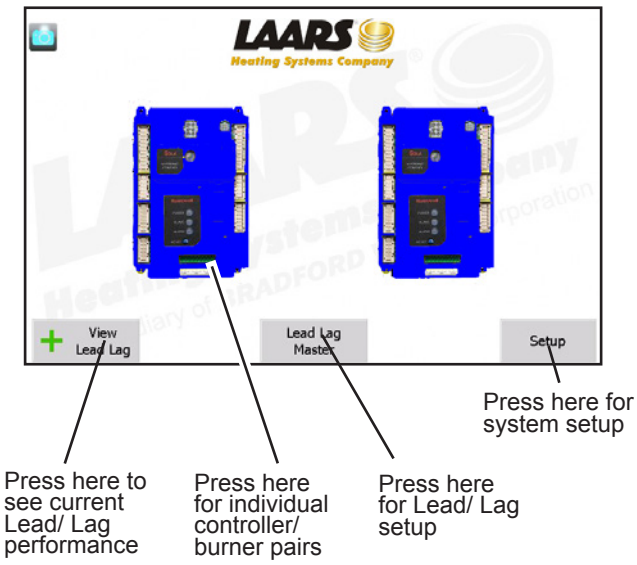

Fig. 3 – Going to Lead/Lag and Individual Functions

Note – For individual functions, if you want to make a change on all of the controller/burner pairs in the system, you will have to go to each controller/burner separately and repeat the change for each of them. If there are eight controller/burners in the system, and you want to make the same change on all of them, go to each of the eight controller/burner pairs separately.

As we go through the explanations in this manual, we will point out whether a control function affects the whole Lead/Lag system, or just an individual controller/burner pair.

This has been just a quick introduction, but this

manual includes two longer sections that will help you to work with the control system:

- Section 8 – "Using the Touch Screen and the Gauges."

  This section will explain how to "Navigate" through the Touch Screen : how to enter and change values, and so on.
- Section 9 – "Setup and Configuration"

  The first part of this section includes a more complete explanation of the Lead/Lag system. The rest of the section includes detailed setup instructions.

If you are not familiar with the control system, the installation and setup process will go much more smoothly if you read through these three sections before beginning work.

1.3 Safety Notes

⚠ WARNING

Fire or Explosion Hazard

Improper configuration can cause fuel buildup and explosion. Improper user operation may result in property loss, severe physical injury, or death.

Any changes to safety-related configuration parameters must only be done by experienced and/or licensed burner/boiler operators and mechanics.

If any odor of gas is detected, or if the gas burner does not appear to be functioning in a normal manner, ***close the main gas shutoff valve***. Do not shut off the power switch. Contact your heating contractor, gas company, or factory representative.

The NeoTherm LC Appliance is protected against over-pressurization. A pressure relief valve is included with each NeoTherm LC.

The inlet gas pressure to the appliance must not exceed 13" W.C. (3.2 kPa).

All installations must be made in accordance with 1) American National Standard Z223.1/NFPA54-Latest Edition "National Fuel Gas Code" or 2) CSA B149.1 "Natural Gas and Propane Installation Code" and with the requirement of the local utility or other authorities having jurisdiction. Such applicable requirements take precedence over the general instructions contained herein.

⚠ WARNING

Carbon Monoxide Hazard

Improper adjustment of the burners may lead to poor combustion quality, increasing the amount of carbon monoxide produced. Excessive carbon monoxide levels may lead to personal injury or death.

⚠ WARNING

Electrical Shock Hazard

Electrical shock can cause severe injury, death or property damage. Disconnect the power supply before beginning installation or changing the wiring to prevent electrical shock or damage to the equipment. It may be necessary to turn off more than one power supply disconnect.

All electrical wiring is to be done in accordance with local codes, or in the absence of local codes, with: 1) The National Electrical Code ANSI/NFPA No. 70 - latest Edition, or 2) CSA STD. C22.1 "Canadian Electrical Code - Part 1." This appliance must be electrically grounded in accordance with these codes.

1.4 Model Identification

Consult the rating plate on the unit. The following information describes the model number structure.

(1-2) **Model Series Designation**
N T = NeoTherm LC

(3) **Usage**
H = Hydronic
V = Volume Water

(4-7) **Size**
1 0 0 0 = 1,000,000 BTU/hr input
1 7 0 0 = 1,700,000 BTU/hr input

(8) **Fuel**
N = Natural Gas
P = LP Gas

(9) **Options Code**
J = CSD1 Version
X = Standard Unit

(10) **Pump Options**
X = No pump

(11) **Revision**
1 = First version

Model Nomenclature

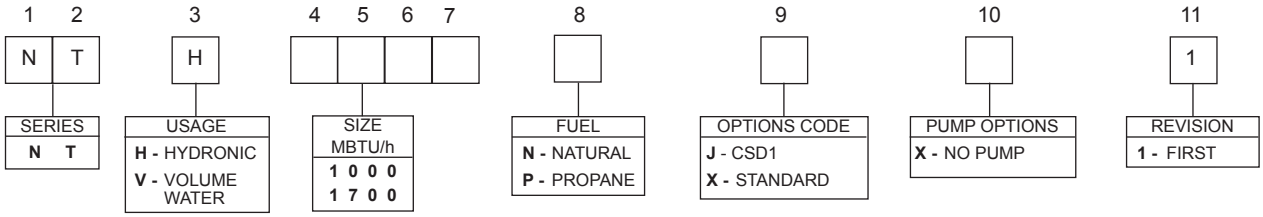

1.5 Warranty

LAARS Heating Systems' NeoTherm LC appliances are covered by a limited warranty. The owner should complete the warranty registration at:

http://www.Laars.com

All warranty claims must be made to an authorized LAARS Heating Systems representative. Claims must include the serial number and model. (This information can be found on the rating plate.) The claim must also include the installation date and name of the installer. Shipping costs are not included in the warranty coverage.

Some accessory items may be shipped in separate packages. Verify receipt of all packages listed on the packing slip. Inspect everything for damage immediately upon delivery, and advise the carrier of any shortages or damage. Any such claims should be filed with the carrier. **The carrier, not the shipper, is responsible for shortages and damage to the shipment whether visible or concealed.**

1.6 Appliance Overview

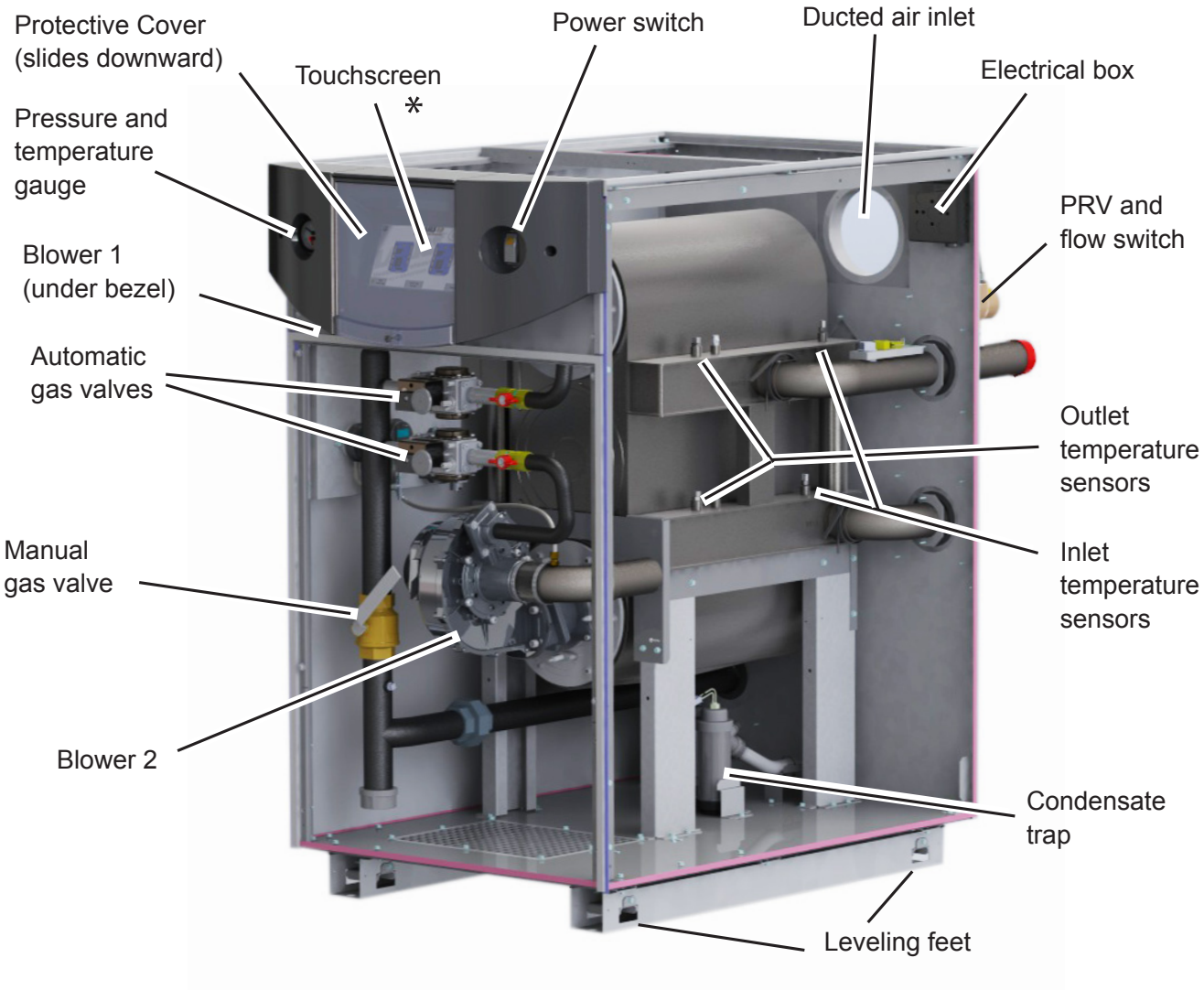

Model 1000

* The Touchscreen does have an internal battery for back-up of the date and time settings. To access the battery, the front panel and the Touchscreen must be removed so that the small plastic door on the back of the touchscreen can be accessed.

  The battery is a CR2032 ‘coin type’ battery and has an expected shelf life of 10 years.

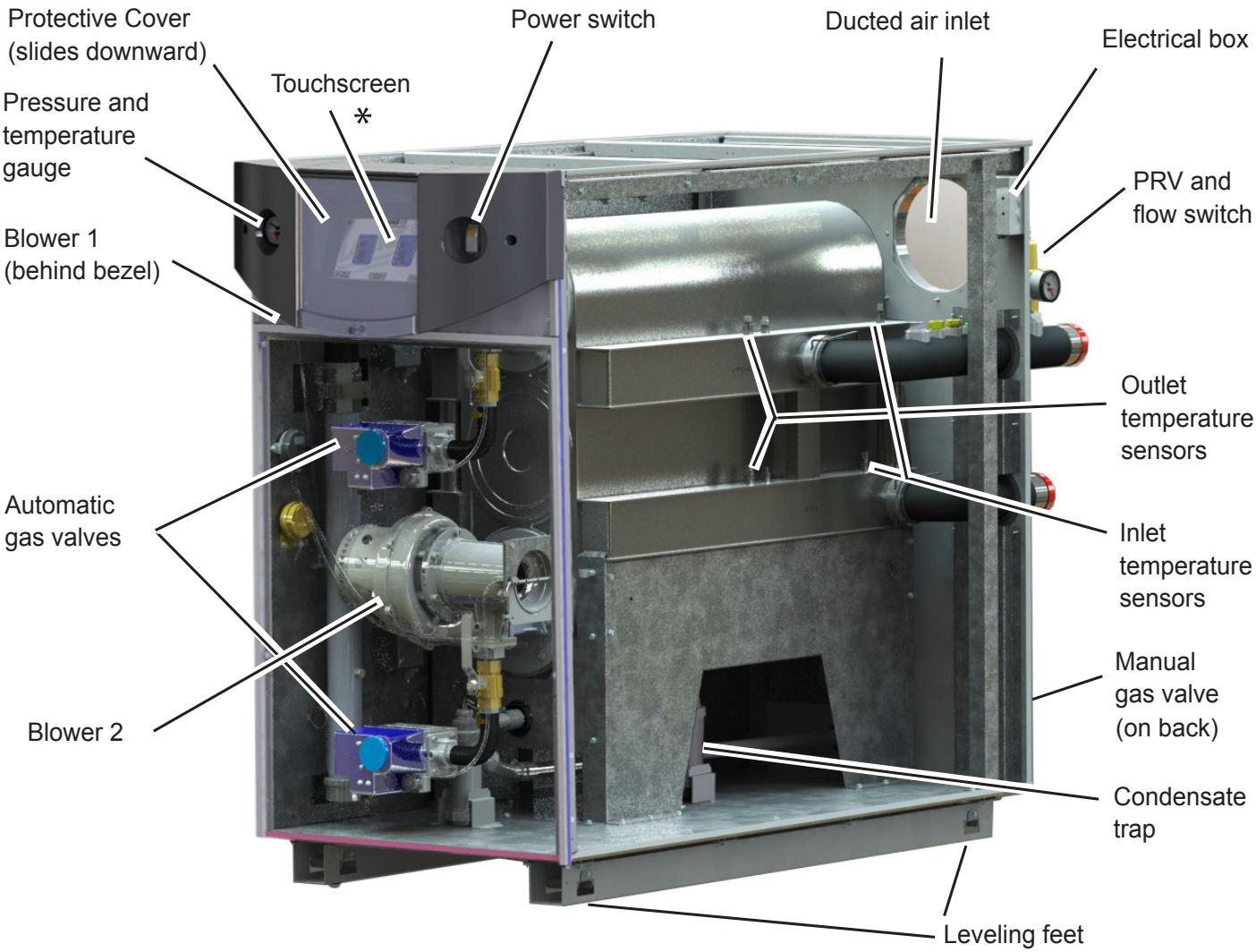

Model 1700

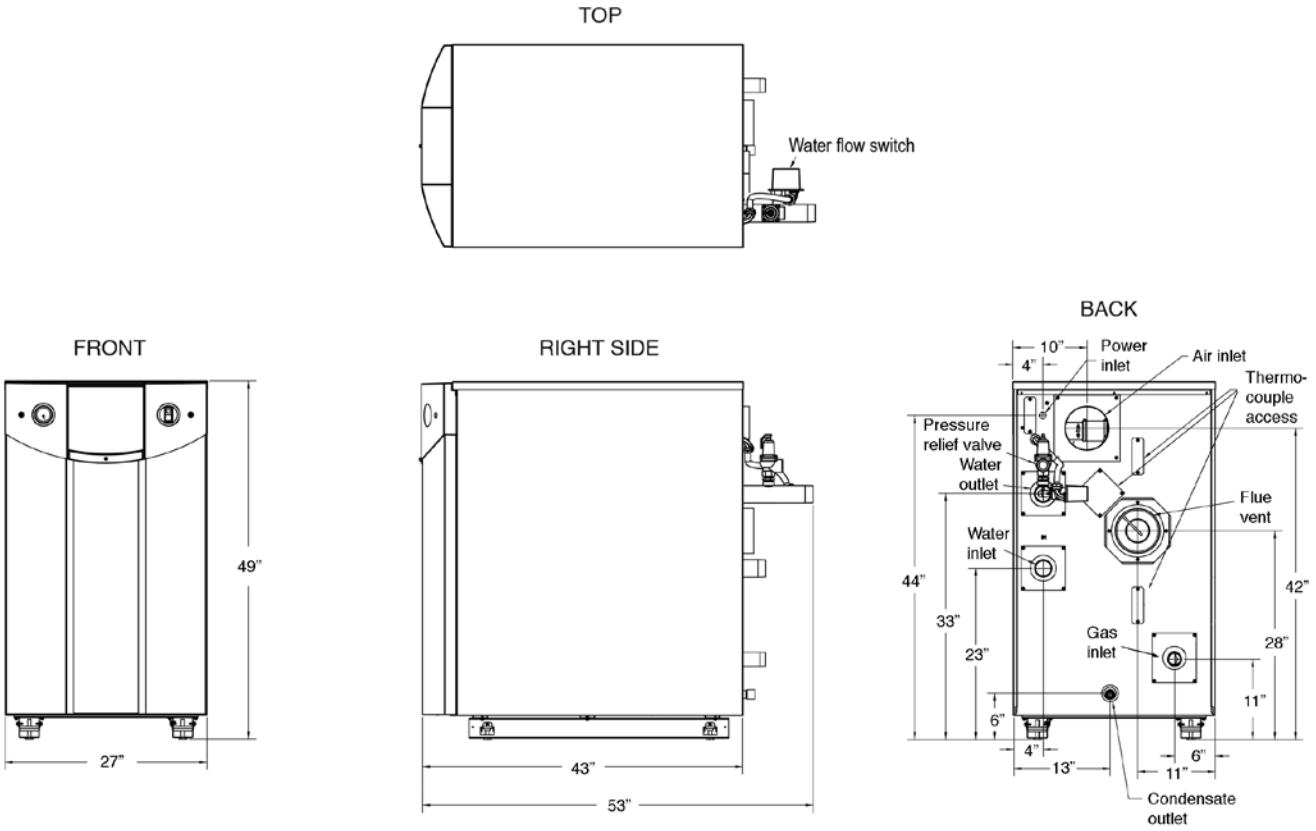

Fig. 5 - Dimensions - NT 1000

1.7 Dimensions

The dimensions are shown in Fig. 5 and Fig. 6.

1.8 Unpacking

The NeoTherm LC is shipped in a single crate. The standard outdoor/system sensor kit is packed inside the same crate.

1. Remove all packing and tie-down materials.
2. Check that the outdoor/system sensor kit is included.

⚠ DANGER

- Water temperature over 125°F (52°C) can cause severe burns instantly or death from scalds.
- Children, disabled and elderly are at highest risk of being scalded.
- See instruction manual before setting temperature at heating appliance.
- Feel water before bathing or showering.
- If this appliance is used to produce water that could scald if too hot, such as domestic hot water use, adjust the outlet control (limit) or use temperature limiting valves to obtain a maximum water temperature of 125°F (52°C).

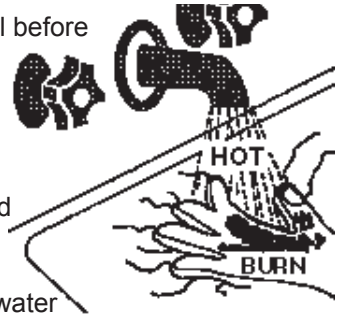

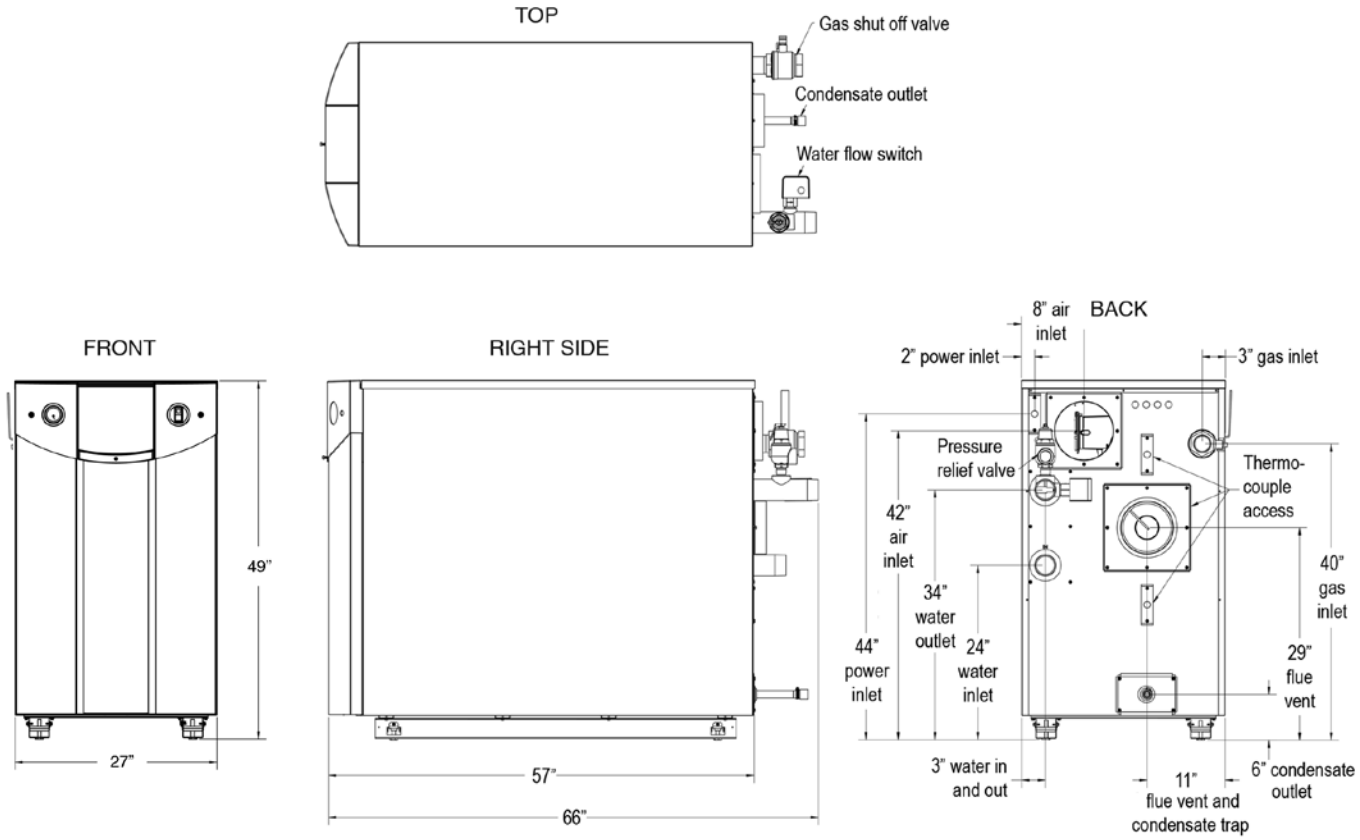

Fig. 6 - Dimensions - NT 1700

Section 2
LOCATING THE APPLIANCE

2.1 Locating the Appliance

The NeoTherm LC may be installed indoors or outdoors. The unit may only be installed outdoors in a location which will never experience freezing temperatures. Choose a location for the unit which allows clearances on all sides for maintenance and inspection. See Table 1. Always install the unit on a firm, level surface. Level the unit using the leveling feet.

The unit should not be located in an area where leakage of any connections will result in damage to the area adjacent to the appliance, or to lower floors of the structure.

When this type of location is not available, install a suitable drain pan, adequately drained, under the appliance.

The appliance is design-certified by CSA-International for installation on combustible flooring; in basements; in closets, utility rooms or alcoves**. NeoTherm LC boilers must never be installed on carpeting.** The location for the appliance should be chosen with regard to the vent pipe lengths and external plumbing.

The unit shall be installed such that the gas ignition system components are protected from water (dripping, spraying, rain, etc.) during operation and service (circulator replacement, control replacement, etc.).

When vented vertically, the NeoTherm LC must be located as close as practical to the vertical section of the vent. If the vent terminal and/or combustion air terminal terminate through a wall, and there is potential for snow accumulation in the local area, both terminals should be installed at an appropriate level above grade or the maximum expected snow line.

The dimensions and requirements that are shown in Table 1 should be met when choosing the locations for the appliance.

APPLIANCE SURFACE	SUGGESTED SERVICE ACCESS CLEARANCE **INCHES**	*CM*
Front	**24**	*60.9*
Left Side	**12**	*30.5*
Right Side	**18**	*45.7*
Back	**24**	*60.9*
Top	**24**	*60.9*

APPLIANCE SURFACE	REQUIRED CLEARANCE TO COMBUSTIBLES **INCHES**	*CM*
Front	**2**	*5.1*
Left Side	**0**	*0*
Right Side	**0**	*0*
Back	**0**	*0*
Top	**8**	*20.3*
Vent	**1**	*2.6*

Table 1 - Clearances

INTAKE / EXHAUST			
SIZE	STANDARD VENT	MAX EQUIV. **FT.**	*M*
1000	6”	**100**	*30*
1700	8”	**100**	*30*

Installations in the U.S. require exhaust vent pipe that is PVC or CPVC complying with ANSI/ASTM D1785 F441, polypropylene complying with ULC-S636, or stainless steel complying with UL1738. Installations in Canada require exhaust vent pipe that is certified to ULC S636.

Intake (air) pipe must be PVC or CPVC that complies with ANSI/ASTM D1785 F441, ABS that complies with ANSI/ASTM D1527, stainless steel, or galvanized material.

Closet and alcove installations do not allow the use of PVC under any circumstances

To calculate max equivalent length, measure the linear feet of the pipe, and add 5 feet *(1.5 m)* for each elbow used.

Table 2 - Vent / Air Pipe Sizes

2.2 Correct Vent Distance from Outside Wall or Roof Termination

The forced draft combustion air blower in the appliance has sufficient power to vent properly when the guidelines in Table 2 are followed.

Note - When located on the same wall, the NeoTherm LC combustion air intake terminal must be installed a minimum of 12” below the exhaust terminal. There must also be a minimum horizontal distance from intake to the exhaust terminal of 36.”

For the concentric vent terminal kit (optional), follow the installation instructions included with the kit.

Section 3
VENTING AND COMBUSTION AIR

3.1 Combustion Air

NeoTherm LC boilers and water heaters must have provisions for combustion and ventilation air in accordance with the applicable requirements for Combustion Air Supply and Ventilation in the National Fuel Gas Code, ANSI Z223 1; or in Canada, the Natural Gas and Propane Installation Code, CSA B149.1. All applicable provisions of local building codes must also be adhered to.

A NeoTherm LC can take combustion air from the space in which it is installed, or the combustion air can be ducted directly to the unit. Ventilation air must be provided in either case.

3.1.1 Combustion Air From Room

In the United States, the most common requirements specify that the space shall communicate with the outdoors in accordance with Method 1 or 2. (See the following descriptions.) Where ducts are used, they shall be of the same cross-sectional area as the free area of the openings to which they connect.

Method 1: Two permanent openings, one commencing within 12" (300 mm) of the top and one commencing within 12" (300 mm) of the bottom, of the enclosure shall be provided. The openings shall communicate directly, or by ducts, with the outdoors or spaces that freely communicate with the outdoors. When directly communicating with the outdoors, or when communicating to the outdoors through vertical ducts, each opening shall have a minimum free area of 1 square inch per 4000 Btu/hr (550 square mm/kW) of total input rating of all equipment in the enclosure. When communicating to the outdoors through horizontal ducts, each opening shall have a minimum free area of not less than 1 square inch per 2000 Btu/hr (1100 square mm/kW) of total input rating of all equipment in the enclosure.

	PVC		CPVC		Stainless Steel		Polypropylene	
Model	Ducted Air	Exhaust	Ducted Air	Exhaust	Ducted Air	Exhaust	Ducted Air	Exhaust
1,000	CA008100	CA008300	CA008100	CA008300	CA008200	D2004500	CA008500	CS008500
1,700	CA010700	CA010900	CA010700	CA010900	CA011000	CA011100	CA011000	CA011100

Table 3a - Horizontal Terminations for Indoor Use

	PVC		CPVC		Stainless Steel		Polypropylene	
Model	Ducted Air	Exhaust	Ducted Air	Exhaust	Ducted Air	Exhaust	Ducted Air	Exhaust
1,000	CA008400	CA008300	CA008400	CA008300	CA008500	CA008500	CA008500	CA008500
1,700	CA010800	CA010900	CA010700	CA010900	CA011300	CA011200	CA011200	CA011200

Table 3b - Vertical Terminations for Indoor Use

Model	Ducted Air	Exhaust
1,000	CA008700	CA008900
1,700	CA010400	CA011500

Table 3c - Outdoor Terminations

Material	United States	Canada
ABS	ANSI/ASTM D1527	The air pipe material must be chosen based upon the intended application of the boiler, and must be installed according to the vent manufacturer's installation instructions.
PVC, sch. 40	ANSI/ASTM D1785 or D2665	
CPVC, sch. 40	ANSI/ASTM F441	
Single wall galv. steel	26 gauge	
Polypropylene	ULC-S636 Class 2C	

Table 4 - Required Combustion Air Pipe Material

Method 2: One permanent opening, commencing within 12" (300 mm) of the top of the enclosure, shall be permitted. The opening shall directly communicate with the outdoors or shall communicate through a vertical or horizontal duct to the outdoors or spaces that directly communicate with the outdoors and shall have a minimum free area of 1 square inch per 3000 Btu/hr (734 square mm/kW) of the total input rating of all equipment located in the enclosure. This opening must not be less than the sum of the areas of all vent connectors in the confined space.

Other methods of introducing combustion and ventilation air are acceptable, providing they conform to the requirements in the applicable codes listed above.

In Canada, consult local building and safety codes or, in absence of such requirements, follow CAN/CSA B149.

3.1.2 Ducted Combustion Air

The combustion air can be taken through the wall, or through the roof. When taken from the wall, it must be taken from out-of-doors by means of the LAARS horizontal wall terminal, shown in Table 3a. See Table 2 to select the appropriate diameter air pipe. When taken from the roof, a field-supplied rain cap or an elbow arrangement must be used to prevent entry of rain water. (See Fig. 7).

Use ABS, PVC, CPVC, polypropylene, stainless steel, or galvanized pipe for the combustion air intake. (See Table 4.) The intake must be sized per Table 2. Route the intake to the boiler as directly as possible. Seal all joints. Provide adequate hangers. The unit must not support the weight of the combustion air intake pipe. The maximum linear pipe length allowed is 100 feet (39 m). Subtract 5 allowable linear ft. (1.5 m) for every elbow used.

When using polypropylene or stainless steel materials in horizontal duct configurations, a single elbow must be installed on the end of the air inlet to act as an outdoor terminal. In vertical duct applications, two elbows must be installed on the end of the inlet to act as a vent terminal. In both installation types, Laars part number CA008500 (for Model 1,000) or CA011300 (for Model 1,700) can then be installed into the elbow to prevent foreign objects from entering the air inlet system. The elbow(s) required to complete the vent terminal is not included.

The connection for the intake air pipe is on the back panel.

In addition to air needed for combustion, air shall also be supplied for ventilation, including air required for comfort and proper working conditions for personnel. Refer to the applicable codes.

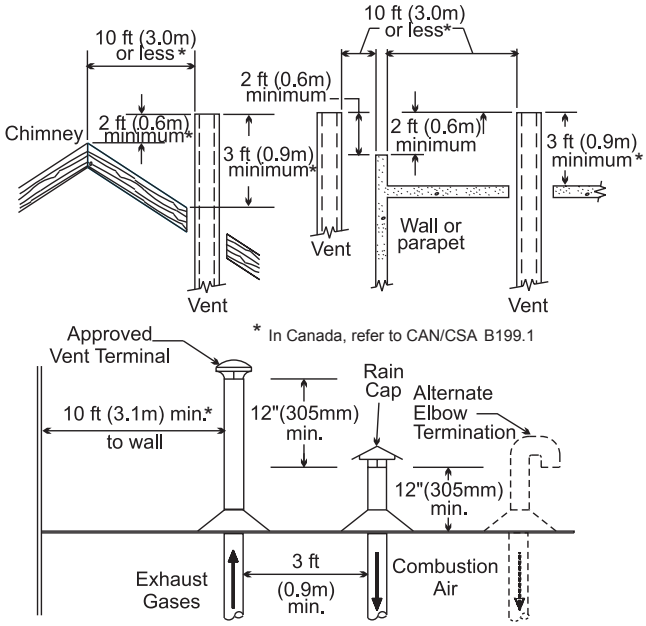

Fig. 7 - Combustion Air and Vent Through Roof

Installation Standards		
Material	United States	Canada
Stainless steel	UL 1738	Venting must be ULC-S636 certified for use as venting material. The venting material class must be chosen based upon the intended application of the boiler, and must be installed according to the maximum flue gas temperature and the vent manufacturer's instructions.
PVC*, sch 40	ANSI/ASTM D178	
CPVC, sch 40	ANSI/ASTM F441	
Polypropylene	UL-S636 Class 2C	

* PVC cannot be used for the first 12 inches of vent material

Table 5 - Required Exhaust Vent Material

3.2 Venting

⚠ WARNING

Selection of improper vent materials for installations that are installed in closets, or will be operated in high ambient temperature levels, may lead to property damage, personal injury, or death.

⚠ WARNING

A 12" or 305 mm section (for Model 1000) or 36" or 915 mm section (for Model 1700) of CPVC must be connected directly to the boiler before a PVC vent system can be used. Connecting PVC directly to the boiler's flue collar may cause vent failure, leading to property damage, personal injury, or death.

⚠ WARNING

Failure to use the appropriate vent material, installation techniques, or glues and sealants could lead to vent failure causing property damage, personal injury or death.

⚠ WARNING

All venting must be installed according to this manual and any other applicable local codes, including but not limited to, ANSI Z223.1/NFPA 54, CSA B149.1, CSAB149.2 and ULC-S636. Failure to follow this manual and applicable codes may lead to property damage, severe injury, or death.

The flue temperature of the NeoTherm LC changes dramatically with changes in operating water temperature. Therefore, it is necessary to assess the application of the boiler to determine the required certified vent class. If the NeoTherm LC is installed in an application where the ambient temperature is elevated, and/or installed in a closet/alcove, CPVC, polypropylene, or stainless steel material is required. If the system temperatures are unknown at the time of installation, class IIC or higher venting material is recommended.

The NeoTherm LC is a Category IV appliance and may be installed with PVC, CPVC that complies with ANSI/ASTM D1785 F441, or polypropylene that complies with ULC-S636 Class 2C, or a stainless steel venting system that complies with the UL 1738 Standard. (See Table 5.) The unit's vent can terminate through the roof, or through an outside wall.

The use of polypropylene vent material has been accepted by CSA for use with exhaust and combustion. The polypropylene vent manufacturer shall have ULCS636 Class 2C approval or higher with a recognized listing agency for all components used in the venting system. All components used must be from the same manufacturer and designed for use with exhaust temperatures of 195°F (90°C) or higher. When installing polypropylene vent systems, please, refer to the vent supplier's installation instructions for proper installation techniques.

When using PVC/CPVC for the vent material, the first 12 inches or 305 mm (for Model 1000) or 36" or 915 mm (for Model 1700) of the vent must be connected to the CPVC section included with the NeoTherm LC. The CPVC vent section included with the NeoTherm LC may be broken by CPVC fittings if necessary, but never reduced in total length. See Table 2 to select the appropriate vent pipe diameter.

When using polypropylene, all vent material must be from the same manufacturer and UL-S636 rated.

All installations must be done following the vent supplier's recommended installation techniques. If these are not available, refer to the Laars recommendations for the material used.

The vent pipe must pitch upward, toward the vent terminal, not less than 1/4" per foot, so that condensate will run back to the NeoTherm LC to drain. Route the vent pipe to the heater as directly as possible. Seal all joints. Provide adequate hangers as required in the venting system manufacturer's Installation Instructions. Horizontal portions of the venting system must be supported to prevent sagging and may not have any low sections that could trap condensate. The unit must not support the weight of the vent pipe. Please see Table 2 for proper diameter vs. length allowed.

3.2.1 Common Venting

A single vent that is shared by multiple NeoTherm LC's **must** be engineered by a competent venting specialist, and could involve the selection of draft inducing equipment, hardware and controls to properly balance flue gas pressures. **Do not common vent NeoTherm LC's unless the vent system meets this requirement. NeoTherm LC's are never permitted to share a vent with Category I appliances.**

3.2.2 Venting Requirements Unique to Canada

NeoTherm LC boilers and water heaters are Vent Category IV appliances. Per the requirements of CAN/CSA-B149.1, only BH vent systems can be connected to these units and such vent systems, either ULC S636 certified stainless steel or other ULC S636 certified BH vent (eg. plastics) must be installed per the vent manufacturer's certified installation instructions.

It is the responsibility of the appropriately licensed technician installing this NeoTherm LC to use ULC S636 certified vent material consistent with the requirements as described in the Venting and Combustion Air section.

Class I venting systems are suitable for gas-fired appliances producing flue gas temperature of more than 135°C, but not more than 245°C.

Class II venting systems are suitable for gas-fired appliances producing flue gas temperatures of 135°C or less.

Class II venting systems are further classified into four temperature ratings as follows:

A Up to and including 65°C

B Up to and including 90°C

C Up to and including 110°C, and

D Up to and including 135°C

Flue Gas Sampling Port -

It is also the responsibility of the installer to ensure that a flue gas sampling port is installed in the vent system. This flue gas sampling port must be installed near the flue connection of the NeoTherm LC: within 2 feet of the flue connection. There is no flue gas sampling port internal to the NeoTherm LC, so one must be installed in the vent system external to the NeoTherm LC. A flue gas sampling port available as a component of the ULC S636 certified vent system is preferred. However, if one is not available with the certified vent system, Laars suggests using a tee with the branch connection sized to allow for insertion of a flue gas analyzer probe. The branch connection must be resealable with a cap or other means to ensure the vent system remains sealed. (See Fig. 8.)

Consideration must be given to the placement and orientation of the flue gas sampling port to ensure that condensate is free to flow back into the NeoTherm LC and not collect anywhere in the vent system - including in the flue gas sampling port.

Exhaust Vent Terminal -

An exhaust vent terminal must be installed. If an exhaust vent terminal is not available with the certified vent system, Laars suggests the use of a coupler fitting from the certified vent system into which the vent terminal screen can be installed. Be sure to install and terminate both vent and combustion air pipes per the instructions in this section.

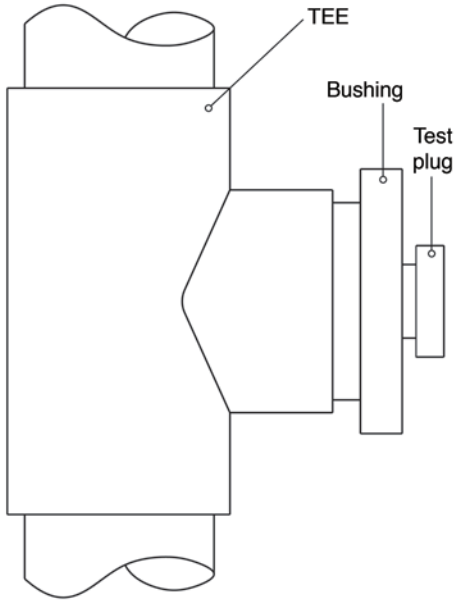

Fig. 8 - Test Port

3.3 Locating the Vent and Combustion Air Terminals

3.3.1 Side Wall Vent Terminal

The appropriate Laars side wall vent terminal must be used. The terminal must be located in accordance with ANSI Z223.1/NFPA 54 and applicable local codes. In Canada, the installation must be in accordance with CSA B149.1 or .2 and local applicable codes.

Consider the following when installing the terminal:

1. Figure 9 shows the requirements for mechanical vent terminal clearances for the U.S. and Canada.
2. Vent terminals for condensing appliances or appliances with condensing vents are **not** permitted to terminate above a public walkway, or over an area where condensate or vapor could create a nuisance or hazard.
3. Locate the vent terminal so that vent gases cannot be drawn into air conditioning system inlets.
4. Locate the vent terminal so that vent gases cannot enter the building through doors, windows, gravity inlets or other openings. Whenever possible, avoid locations under windows or near doors.

		U.S. Installations (see note 1)	Canadian Installations (see note 2)
A=	Clearance above grade, veranda, porch, deck, or balcony	12 inches (30 cm) See note 6	12 inches (30 cm) See note 6
B=	Clearance to window or door that may be opened	Direct vent only: 12 inches (30 cm); Other than Direct vent: 4 ft (1.2m) below or to side of opening; 1 ft (30 cm) above opening	36 inches (91 cm)
C=	Clearance to permanently closed window	See note 4	See note 5
D=	Vertical clearance to ventilated soffit located above the terminal within a horizontal distance of 2 feet (61 cm) from the center line of the terminal	See note 4	See note 5
E=	Clearance to unventilated soffit	See note 4	See note 5
F=	Clearance to outside corner	See note 4	See note 5
G=	Clearance to inside corner	See note 4	See note 5
H=	Clearance to each side of center line extended above meter/regulator assembly	See note 4	3 feet (91 cm) within a height 15 feet above the meter/regulator assembly
I=	Clearance to service regulator vent outlet	See note 4	3 feet (91 cm)
J=	Clearance to nonmechanical air supply inlet to building or the combustion air inlet to any other appliance	Direct vent only: 36” (91cm) Other than Direct vent: 4 ft (1.2m) below or to side of opening; 1 ft (30 cm) above opening	36 inches (91 cm)
K=	Clearance to a mechanical air supply inlet	3 feet (91 cm) above if within 10 feet (3 m) horizontally	6 feet (1.83 m)
L=	Clearance above paved sidewalk or paved driveway located on public property	Vent termination not allowed in this location for category IV appliances.	7 ft (2.1 m) See note 5
M=	Clearance under veranda, porch, deck, or balcony	See note 4	12 inches (30 cm) See note 5

Notes:

1. In accordance with the current ANSI Z223.1 / NFPA 54 National Fuel Gas Code.
2. In accordance with the current CAN/CSA-B149 Installation Codes.
3. Permitted only if veranda, porch, deck, or balcony is fully open on a minimum of two sides beneath the floor.
4. For clearances not specified in ANSI Z223.1 / NFPA 54, clearance is in accordance with local installation codes and the requirements of the gas supplier.
5. For clearances not specified in CAN/CSA-B149, clearance is in accordance with local installation codes and the requirements of the gas supplier.
6. IMPORTANT: All terminals must be placed so that they remain a minimum 12” above expected snow line. Local codes may have more specific requirements, and must be consulted.

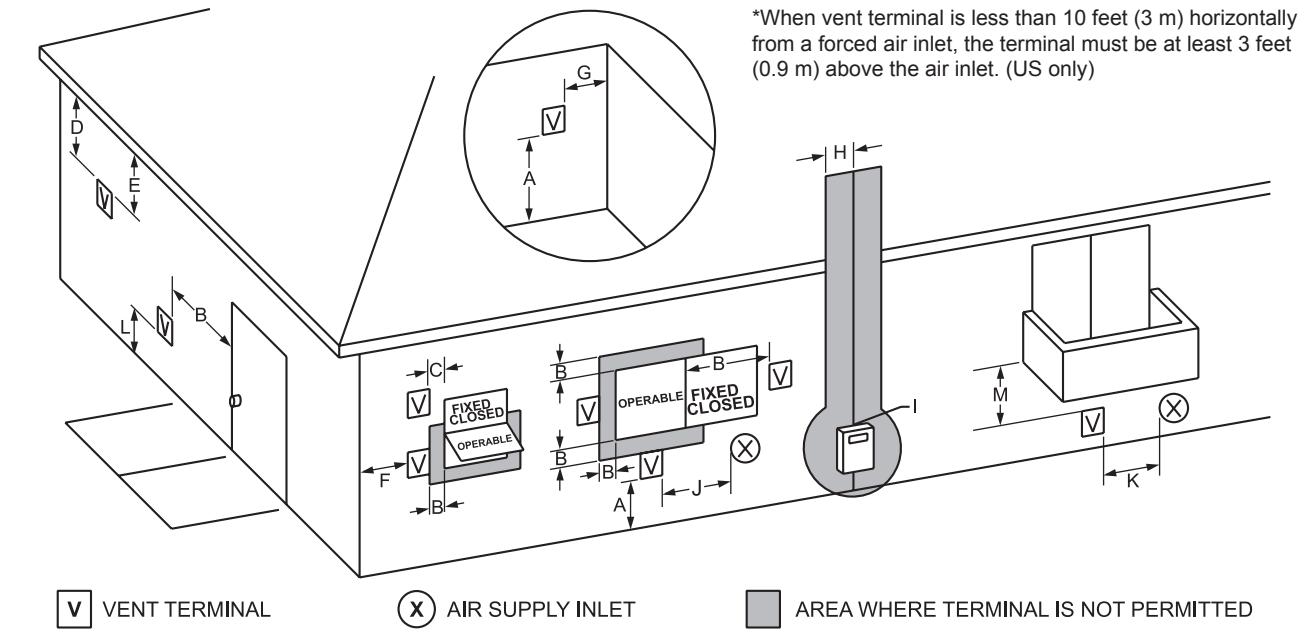

Fig. 9 - Combustion Air and Vent Through Side Wall

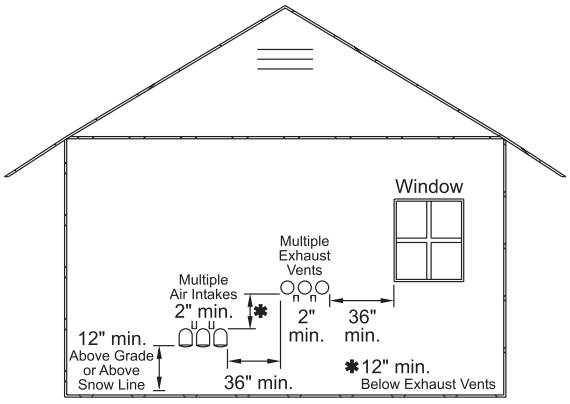

IMPORTANT: All terminals must be placed so that they remain at least 12" above the expected snow line. Local codes may have more specific requirements, and must be consulted. Refer to the NFPA54 National Fuel Gas Code and your local codes for all required clearances for venting.

Fig. 10 - Multiple Side-Wall Terminals, Air and Vent

5. **Locate the vent terminal so that it cannot be blocked by snow. The installer may determine that a vent terminal must be higher than the minimum shown in codes, depending upon local conditions.**
6. Locate the terminal so the vent exhaust does not settle on building surfaces or other nearby objects. Vent products may damage surfaces or objects.
7. If the boiler or water heater uses ducted combustion air from an intake terminal located on the same wall, see Figures 10 and 11 for proper spacing and orientation.

If the vent termination is located in an area exposed to high winds, an optional PVC tee (the same diameter as the vent pipe) may be used. The tee'd vent termination offers greater protection from wind related operating issues.

3.3.2 Side Wall Combustion Air Terminal

The LAARS side wall combustion air terminal must be used when the heater takes air from a side wall. (See Table 3.) Contact Laars for AL29-4C termination fittings. Consider the following when installing the terminal. (See Figures 10 and 11).

1. Do not locate the air inlet terminal near a source of corrosive chemical fumes (e.g., cleaning fluid, chlorine compounds, etc.).
2. Locate the terminal so that it will not be subject to damage by accident or vandalism. It must be at least 7 feet (2.1 m) above a public walkway.
3. Locate the combustion air terminal so that it cannot be blocked by snow. The National Fuel Gas Code requires that it be at least 12 inches (30 cm) above grade, but the installer may determine it should be higher, depending upon local conditions.
4. If the NeoTherm LC is side-wall vented to the same wall, locate the vent terminal at least 1 foot (0.3 m) above the combustion air terminal.
5. Multiple vent kits should be installed such that the horizontal distance between outlet group and inlet group is 36" (90 cm). (See Figure 10.)
6. The vent outlet must be at least 12" above the top of the air inlet, and must be at least 36" (90 cm) horizontally from the air inlet. (See Figure 10.)

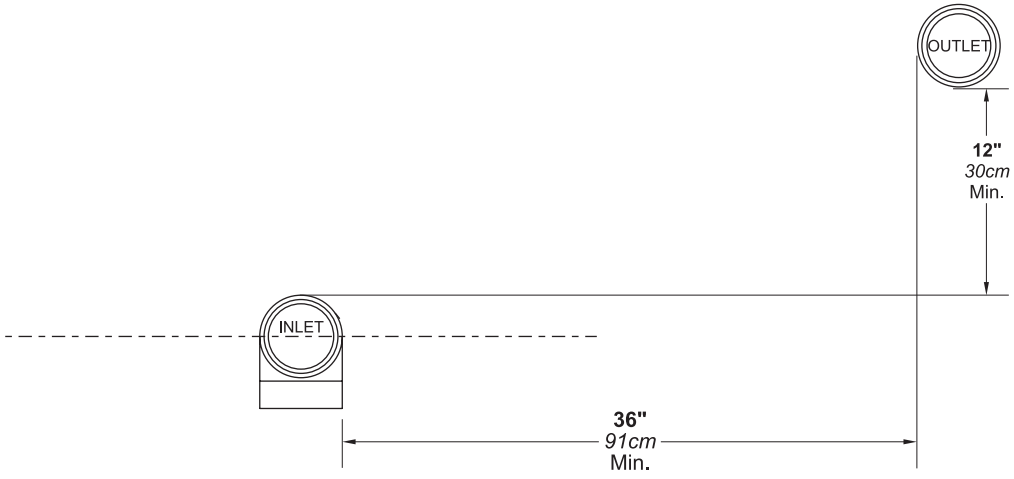

Fig. 11 - Minimum Venting Distance

3.3.3 Vertical Vent Terminal

When the unit is vented through the roof, the vent must extend at least 3 feet (0.9 m) above the point at which it penetrates the roof. It must extend at least 2 feet (0.6 m) higher than any portion of a building within a horizontal distance of 10 feet (3.0 m), and high enough above the roof line to prevent blockage from snow. The vent terminal offered with the NeoTherm LC can be used in both vertical and horizontal applications. When the combustion air is taken from the roof, the combustion air must terminate at least 12" (30 cm) below the vent terminal.

3.3.4 Vertical Combustion Air Terminal

When combustion air is taken from the roof, a field-supplied rain cap or an elbow arrangement must be used to prevent entry of rain water. The opening on the end of the terminal must be at least 12" (30 cm) above the point at which it penetrates the roof, and high enough above the roof line to prevent blockage from snow. When the vent terminates on the roof, the combustion air must terminate at least 12" (30 cm) below the vent terminal.

3.3.5 Installations in the Commonwealth of Massachusetts

In Massachusetts the following items are required if the side-wall exhaust vent termination is less than seven (7) feet above finished grade in the area of the venting, including but not limited to decks and porches. (From Massachusetts Rules and regulations 248 CMR 5.08.)

1. **Installation of Carbon Monoxide Detectors**

   At the time of installation of the side wall vented gas fueled appliance, the installing plumber or gas-fitter shall observe that a hard-wired carbon monoxide detector with an alarm battery back-up is installed on the floor level where the gas appliance is to be installed. In addition, the installing plumber or gasfitter shall observe that a battery operated or hard-wired carbon monoxide detector with an alarm is installed on each additional level of the dwelling, building or structure served by the side-wall horizontally vented gas fueled equipment. It shall be the responsibility of the property owner to secure the services of qualified licensed professionals for installation of hard-wired carbon monoxide detectors.

   a. In the event that the side-wall horizontally vented gas fueled equipment is installed in a crawl space or an attic, the hard-wired carbon monoxide with alarm and battery back-up may be installed on the next adjacent floor level.

   b. In the event that the requirements of the subdivision cannot be met at the time of completion of installation, the owner shall have a period of thirty (30) days to comply with the above requirements, provided, however, that during said thirty (30) day period, a battery operated carbon monoxide detector with an alarm be installed.

2. **Approved Carbon Monoxide Detectors**

   Each carbon monoxide detector shall comply with NFPA 720 and be ANSI/UL 2034 listed and IAS certified.

3. **Signage**

   A metal or plastic identification plate shall be permanently mounted to the exterior of the building at a minimum height of eight (8) feet above grade directly in line with the exhaust vent terminal for horizontally vented gas fueled heating appliance or equipment. The sign shall read, in print no less than one-half (1/2) inch in size: "GAS VENT DIRECTLY BELOW, KEEP CLEAR OF ALL OBSTRUCTIONS."

4. **Inspection**

   The state or local gas inspector of the side-wall horizontally vented gas fueled appliance shall not approve the installation unless, upon inspection, the inspector observes carbon monoxide detectors and signage installed in accordance with the provisions of 248 CMR 5.08(2)(a) 1-4.

3.4 Common Vent Test

Note -This section does not describe a method for common venting NeoTherm LC's. It describes what must be done when a unit is removed from a common vent system. NeoTherm LC's require special vent systems and fans for common vent. Contact the factory if you have questions about common venting NeoTherm LC's.

When an existing boiler is removed from a common venting system, the common venting system is likely to be too large for proper venting of the appliances remaining connected to it.

At the time of removal of an existing boiler, the following steps shall be followed with each appliance remaining connected to the common venting system placed in operation, while the other appliances remaining connected to the common venting system are not in operation.

1. Seal any unused openings in the common venting system.
2. Visually inspect the venting system for proper size and horizontal pitch and determine there is no blockage or restriction, leakage, corrosion or other deficiencies which could cause an unsafe condition.

3. As much as possible, close all building doors and windows. Also close all doors between the space in which the appliances remaining connected to the common venting system are located and other spaces of the building. Turn on any clothes dryers or other appliances not connected to the common venting system. Turn on any exhaust fans, such as range hoods and bathroom exhausts, so they will operate at maximum speed. Do not operate a summer exhaust fan. Close any fireplace dampers.
4. Place in operation the appliance being inspected. Follow the lighting instructions. Adjust the thermostat so the appliance will operate continuously.
5. Test for spillage at the draft hood relief opening after five minutes of main burner operation. Use the flame of a match or candle, or smoke from a cigarette, cigar or pipe.
6. After it has been determined that each appliance remaining connected to the common venting system properly vents when tested as outlined above, return the doors, windows, exhaust fans, fireplace dampers and any other gas burning appliances to their previous conditions of use.
7. Any improper operation of the common venting system should be corrected so that the installation conforms to the National Fuel Gas Code, ANSI Z223.1/NFPA 54 and/or CSA B149.1, Installation Codes. When resizing any portion of the common venting system, the common venting system should be resized to approach the minimum size as determined using the appropriate tables and guidelines in the National Fuel Gas Code, ANSI Z223.1 NFPA 54 and/or CSA B149.1, Installation Codes.

3.5 Outdoor Installation

The NeoTherm LC may only be installed outdoors in applications where the outdoor temperature doesn't drop below freezing. For proper operation in outdoor installations, the boiler must be equipped with the inlet air and exhaust terminal kits listed in Table 3C. The bottom panel cover plate must be removed. Additional instructions are supplied with the terminal kits.

3.6 Condensate Drain Trap

A condensate drain trap is included with the NeoTherm LC and is designed to drain the boiler of condensate. The vent condensate should be drained through a drain tee located in the vent line. This will help prevent excessive condensate from entering the boiler condensate trap and preventing the boiler from operating.

Connect a 3/4" PVC pipe between the drain connection and a floor drain (or condensate pump if a floor drain is not accessible).

The condensate drain must be installed to prevent the accumulation of condensate. When a condensate pump is not used, the tubing must continuously slope downward toward the drain with no spiraling.

Consult local codes for the disposal method.

⚠ Caution

Condensate is mildly acidic (pH=5), and may harm some floor drains and/or pipes, particularly those that are metal. Ensure that the drain, drainpipe, and anything that will come in contact with the condensate can withstand the acidity, or neutralize the condensate before disposal. **Damage caused by failure to install a neutralizer kit or to adequately treat condensate will not be the manufacturer's responsibility.**

Section 4
GAS SUPPLY AND PIPING

4.1 Gas Supply and Piping

Gas piping should be supported by suitable hangers or floor stands, not the appliance.

Installers should refer to local building and safety codes or, in the absence of such requirements, follow the National Fuel Gas Code, ANSI Z223.1 NFPA 54 and/or CSA B149.1, Installation Codes.

Review the following instructions before proceeding with the installation.

1. Verify that the appliance is fitted for the proper type of gas by checking the rating plate. NeoTherm LC will function properly without the use of high altitude modification at elevations up to 10,000 feet (3050 m).
2. The maximum inlet gas pressure must not exceed 13" W.C. (3.2 kPa). The minimum inlet gas pressure is 4" W.C. (1.0 kPa).
3. Refer to Tables 6A, 6B, 6C and 6D to size the piping.
4. Run the gas supply line in accordance with all applicable codes.
5. Locate and install manual shutoff valves in accordance with state and local requirements.
6. A sediment trap must be provided upstream of the gas controls.
7. All threaded joints should be coated with piping compound resistant to the action of liquefied petroleum gas.
8. The appliance and its individual shutoff valve must be disconnected from the gas supply piping during any pressure testing of that system at test pressures in excess of 1/2 PSIG (3.45 kPa).
9. The unit must be isolated from the gas supply system by closing its individual manual shutoff valve during any pressure testing of the gas supply piping system at test pressures equal to or less than 1/2 PSIG (3.45 kPa).
10. The appliance and its gas connection must be leak tested before placing it in operation.
11. Purge all air from gas lines.

⚠ WARNING

Open flame can cause gas to ignite and result in property damage, severe injury, or loss of life.

Note - The NeoTherm LC appliance and all other gas appliances sharing the gas supply line must be firing at maximum capacity to properly measure the inlet supply pressure. The pressure can be measured at the supply pressure port on the gas valve. Low gas pressure could be an indication of an undersized gas meter, undersized gas supply lines and/or an obstructed gas supply line. Some NeoTherm LC's are equipped with low and high gas pressure switches that are integrally vent limited. These types of devices do not require venting to atmosphere.

NeoTherm LC NATURAL GAS REQUIRED

SIZE	CU FT / HR.
1000	1000
1700	1700

TO SIZE PIPING:

Measure linear distance from meter outlet to last boiler. Add total input of all boilers and divide by 1000 to obtain cu ft / hr required. Add total equivalent length of fittings used according to Table 6B. Align total length (pipe and fittings) on left side column of Table 6C with highest cubic feet of gas required.

Notes:

Consult and confirm with Applicable Fuel Gas Code before beginning work.
Verify gas inlet pressure is between 4 and 13 in W.C. before starting boiler.

Table 6A - Natural Gas Requirements

EQUIVALENT LENGTHS OF STRAIGHT PIPE FOR TYPICAL SCH 40 FITTINGS

	NOMINAL PIPE SIZE					
FITTING	1/2"	3/4"	1"	1-1/4"	1-1/2"	2"
	LINEAR FEET					
90° ELBOW	3.6	4.4	5.2	6.6	7.4	8.5
TEE	4.2	5.3	6.6	8.7	9.9	12

Table 6B - Equivalent Pipe Lengths

SCH 40 METAL PIPE CAPACITY FOR 0.60 SPECIFIC GRAVITY NATURAL GAS

	NOMINAL PIPE SIZE @ 0.30" W.C. PRESSURE DROP					
LENGTH	1/2"	3/4"	1"	1-1/4"	1-1/2"	2"
FT	CUBIC FEET OF GAS PER HOUR					
20	92	190	350	730	1100	2100
40		130	245	500	760	1450
60		105	195	400	610	1150
80		90	170	350	530	990
100			150	305	460	870

Table 6C - Pipe Capacity for Natural Gas

SCHED 40 METAL PIPE CAPACITY FOR 1.50 SPECIFIC GRAVITY UNDILUTED PROPANE

	NOMINAL PIPE SIZE @ 11" W.C. INLET AND 0.5" W.C. PRESSURE DROP					
SIZE	1/2"	3/4"	1"	1-1/4"	1-1/2"	2"
LENGTH	MAXIMUM CAPACITY IN THOUSANDS OF BTU PER HOUR					
20	200	418	787	1616	2422	4664
40	137	287	541	1111	1664	3205
60	110	231	434	892	1337	2574
80	94	197	372	763	1144	2203
100	84	175	330	677	1014	1952

Notes:

1. Follow all local and national LP gas codes for line sizing and equipment requirements.
2. Verify that inlet gas pressure remains between 4 and 13 inches of water column before and during operation.

Source: ANSI Z223.1-80 National Fuel Gas Code.

Table 6D - Pipe Capacity for Propane

Section 5
PUMP REQUIREMENTS

5.1 NeoTherm LC Boiler Flow and Head Requirements

Model	Temperature Rise in °F											
	20°F		25°F		30°F		35°F		40°F		45°F	
	Flow GPM	H/L-Ft	Flow GPM	H/L-Ft	Flow GPM	H/L-Ft	Flow GPM	H/L-Ft	Flow GPM	H/L-Ft	Flow GPM	H/L-Ft
1,000	95	30	75	20	62	15	54	11	48	9	42	7
1,700	161	41	129	27	107	19	92	14	81	11	72	9

Model	*Temperature Rise in °C*											
	11.0°C		*13.7°C*		*16.5°C*		*19.3°C*		*22.0°C*		*24.7°C*	
	Flow LPM	*H/L-m*	*Flow LPM*	*H/L-m*	*Flow LPM*	*H/L-m*	*Flow LPM*	*H/L-m*	*Flow LPM*	*H/L-m*	*Flow LPM*	*H/L-m*
1,000	*359*	*9.0*	*283*	*6.0*	*234*	*4.5*	*204*	*3.3*	*182*	*2.7*	*159*	*2.1*
1,700	*609*	*12.3*	*488*	*8.1*	*405*	*5.7*	*348*	*4.3*	*306*	*3.3*	*272*	*2.7*

Table 7 - Water Flow Requirements

5.2 NeoTherm LC Water Heater Flow and Head Requirements

Model	Temperature Rise			
	20°F		*11.0°C*	
	Flow GPM	H/L-Ft	*Flow LPM*	*H/L-m*
1,000	95	30	*359*	*9.0*
1,700	161	41	*609*	*12.3*

Notes -
Figures listed are for soft/normal water.
Maximum hardness of 10 grains per gallon allowed.

Table 8 - NeoTherm LC Water Heater Flow Data

Section 6 - WATER CONNECTIONS

Section 6 is divided into TWO parts. Section 6A covers NTH units designed for hydronic heating. Many installations include indirect domestic hot water. Section 6B covers NTV models, which are designed exclusively for "volume water" domestic hot water applications. Refer to the proper section for instructions on installing and piping your product. Refer to Table 9 for the connection pipe sizes required.

Section 6A - NTH Systems

6A.1 NTH System Piping: Hot Supply Connections

Note -This appliance must be installed in a closed pressure system with a minimum of 12 psi (82.7 kPa) static pressure at the boiler.

The hot water piping should be supported by suitable hangers or floor stands. Do not support the piping with this appliance. The hangers used should allow for expansion and contraction of copper pipe. Rigid hangers may transmit noise through the system resulting from the piping sliding in the hangers. We recommend that padding be used when rigid hangers are installed. Maintain 1" (2.5 cm) clearance to combustibles for all hot water pipes.

Pipe the discharge of the relief valve (full size) to a drain or in a manner to prevent injury in the event of pressure relief. Install an air purger, an air vent, a diaphragm-type expansion tank, a hydronic flow check in the system supply loop, and any other devices required by local codes. The minimum fill pressure must be 12 psig (82.7 kPa). Install shutoff valves where required by code.

NTH SIZE	PIPE SIZE, INCHES	NTV SIZE	PIPE SIZE, INCHES
1000	2	1000	2
1700	2.5	1700	2.5

Table 9 - Water Connection Pipe Sizes

Suggested piping diagrams are shown in Figures 12 through 16. These diagrams are meant only as guides. Components required by local codes must be properly installed.

The NeoTherm LC's efficiency is higher with lower return water temperatures. Therefore, to get the best low return temperature with multiple boilers, pipe as shown in Figures 15 and 16.

6A.2 NTH Cold Water Make-Up

1. Connect the cold water supply to the inlet connection of an automatic fill valve.
2. Install a suitable back flow preventer between the automatic fill valve and the cold water supply.
3. Install shut off valves where required.

In some installations, a hot water heating boiler is connected to heating coils located in an air handling appliance where the coils may be exposed to refrigerated air circulation. In these cases, the boiler piping system must be equipped with flow control valves or other automatic means to prevent gravity circulation of the boiler water during the cooling cycle.

A boiler installed above radiation level, or as required by the authority having jurisdiction, must be provided with a low water cutoff device either as a part of the boiler or at the time of boiler installation.

6A.3 NTH Freeze Protection

⚠ WARNING

Glycol must not be used in domestic hot water applications. Refer to Section 6B.4 for instructions on freeze protection for NTV units (domestic hot water).

NeoTherm LC's may be installed indoors or outdoors. If installed outdoors, the NTH unit must never be installed in a location which may experience freezing temperatures. If installed indoors, and there is an event such as a power outage, interruption of gas supply, failure of system components, activation of safety devices, etc., this may prevent a boiler from firing. **Any time a boiler is subjected to freezing conditions, and the boiler is not able to fire, and/or the water is not able to circulate, there is a risk of freezing in the boiler or in the pipes in the system.** When water freezes, it expands. This may result in bursting of pipes, or damage to the boiler, and this could result in leaking or flooding conditions.

Do not use automotive antifreeze. To help prevent freezing, Laars recommends the use of inhibited glycol concentrations between 20% and 35% glycol. Typically, this concentration will serve as burst protection for temperatures down to approximately -5°F (-20°C). If temperatures are expected to be lower than -5°F (-20°C), glycol concentrations up to 50% can be used. **When concentrations greater than 35% are used, water flow rates must be increased to maintain a 20°F to 25°F temperature rise through the boiler.**

Different glycol products may provide varying degrees of protection. Glycol products must be maintained properly in a heating system, or they may become ineffective. Consult the glycol specifications, or the glycol manufacturer, for information about specific products, maintenance of solutions, and set up according to your particular conditions.

The following manufacturers offer glycols, inhibitors, and anti foamants that are suitable for use in the NeoTherm LC. Please refer to the manufacturers instructions for proper selection and application.

- Sentinel Performance Solutions Group
- Hercules Chemical Company
- Dow Chemical Company

6A.4 NTH Suggested Piping Schematics

Figures 12 through 16 (the next several pages) show suggested piping configurations for NTH boilers. These diagrams are only meant as guides. All components or piping required by local code must be installed.

6A.5 Condensate Drain Trap

A condensate drain trap is included with the NeoTherm LC and is designed to drain the boiler of condensate. The vent condensate should be drained through a drain tee located in the vent line. This will help prevent excessive condensate from entering the boiler condensate trap and preventing the boiler from operating.

Connect a 3/4" PVC pipe between the drain connection and a floor drain (or condensate pump if a floor drain is not accessible).

The condensate drain must be installed to prevent the accumulation of condensate. When a condensate pump is not used, the tubing must continuously slope downward toward the drain with no spiraling.

Consult local codes for the disposal method.

⚠ Caution

Condensate is mildly acidic (pH=5), and may harm some floor drains and/or pipes, particularly those that are metal. Ensure that the drain, drainpipe, and anything that will come in contact with the condensate can withstand the acidity, or neutralize the condensate before disposal. **Damage caused by failure to install a neutralizer kit or to adequately treat condensate will not be the manufacturer's responsibility.**

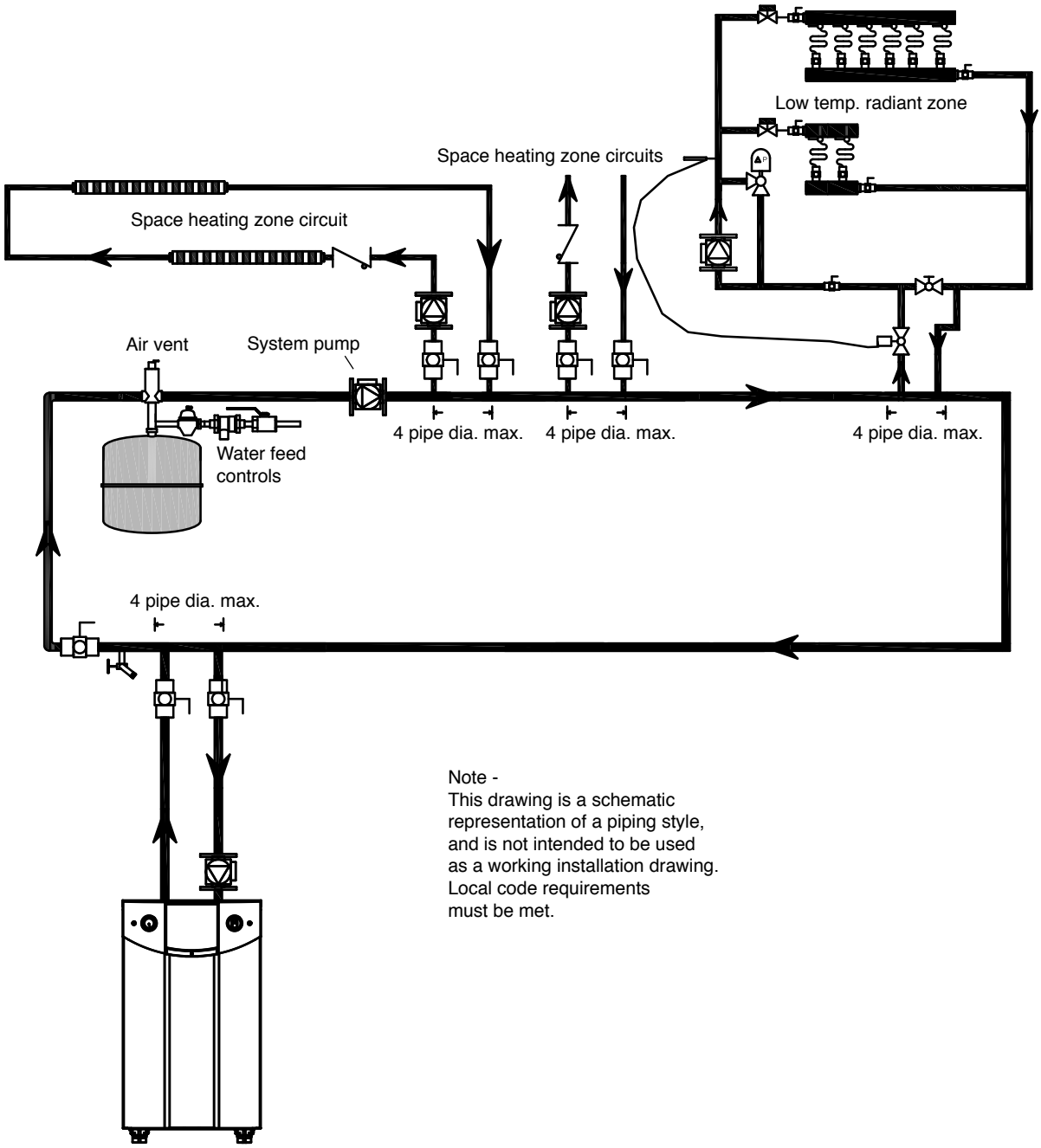

Fig. 12 - Hydronic Piping — Single Boiler, Multiple Temperature Zones

Zoning with circulators

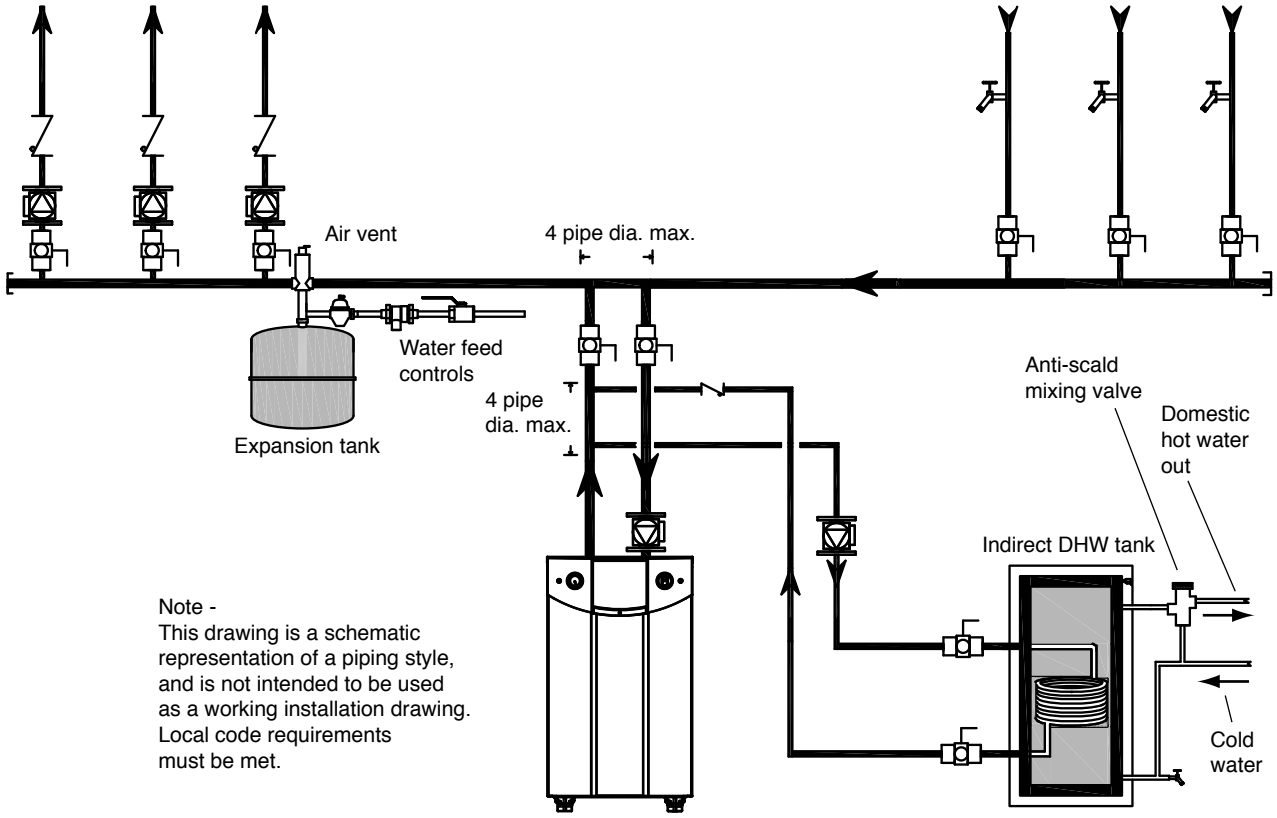

Fig. 13 - Hydronic Piping — Single Boiler, Zoning with Circulators, Indirect DHW Tank with Zone Pumps

Indirect tank directly off of boiler

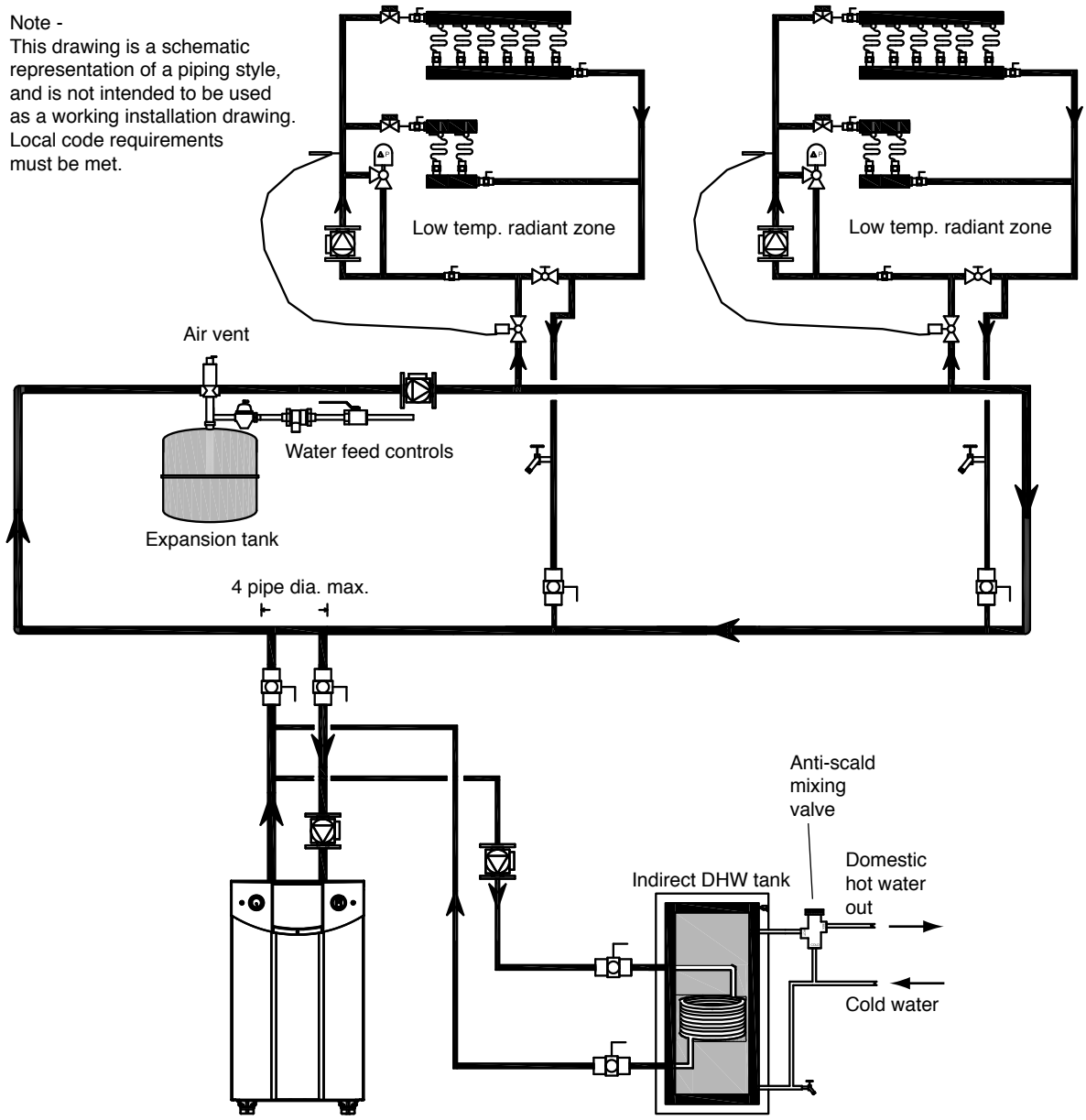

Fig. 14 - Hydronic Piping — Single Boiler with Low Temperature Zones and Indirect DHW Tank

Indirect tank directly off of boiler

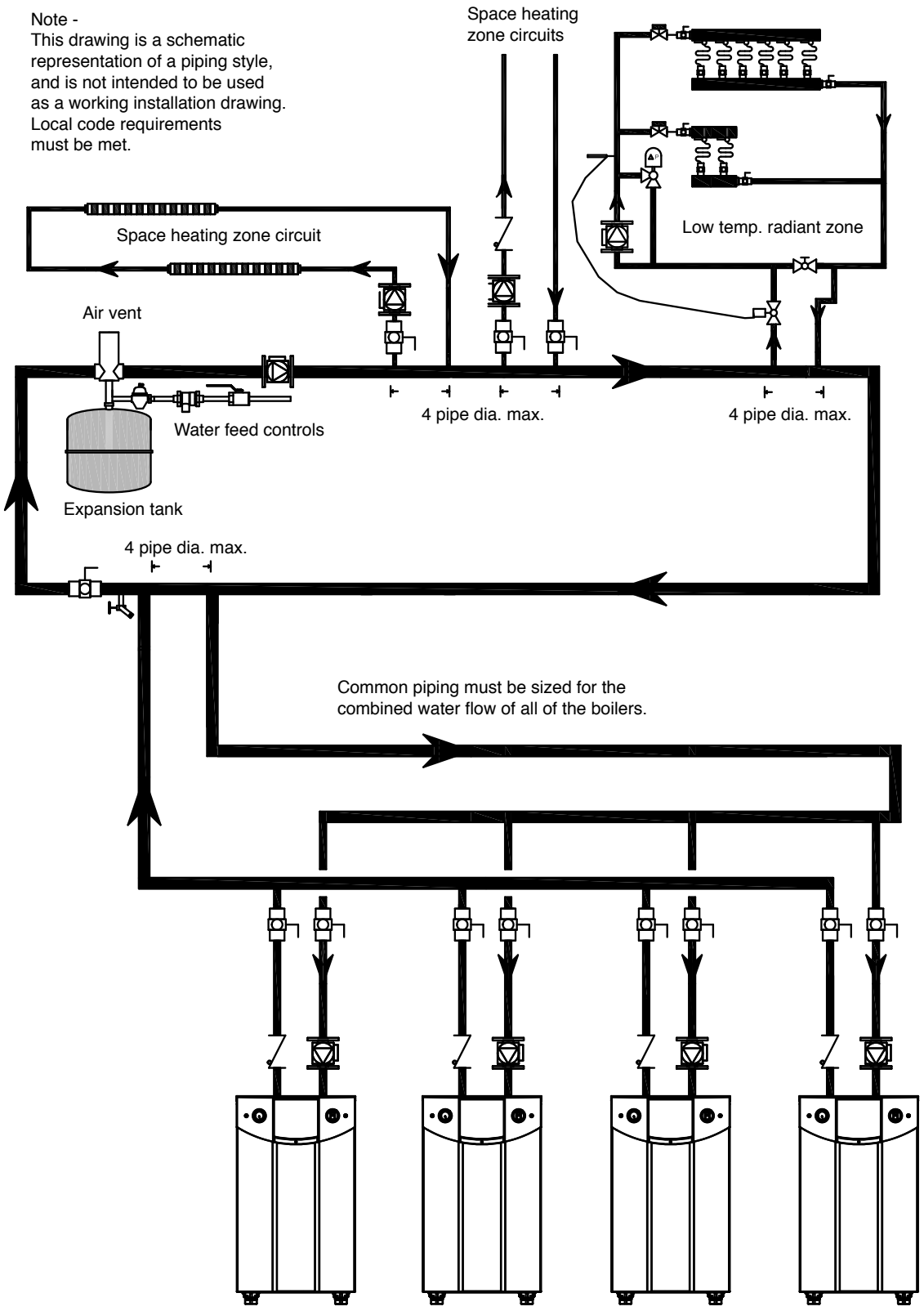

Fig. 15 - Hydronic Piping — Multiple Boilers, Multiple Temperature Zones, Reverse Return

Zoning with circulators

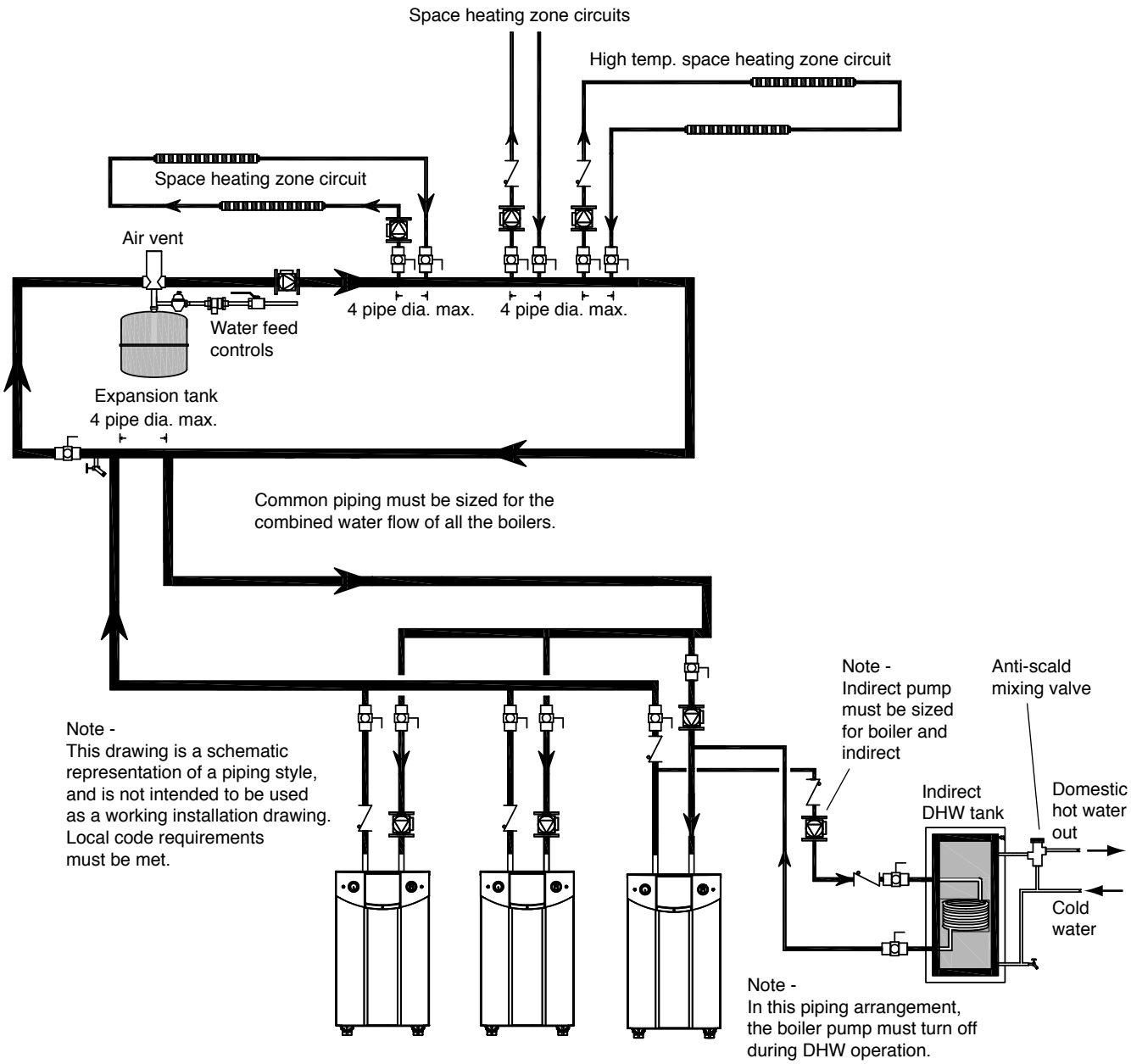

Fig. 16 - Hydronic Piping — Multiple Boilers, Indirect DHW Off of One Boiler

Section 6B - NTV Systems

6B.1 NTV Water Quality

NTV water heaters must be installed in water conditions of 10 gpg hardness or less, with a pH range of 6.5 to 9.5 pH. Values outside of this range may reduce the life expectancy of the product. Operating the NTV in water with higher hardness levels will cause heat exchanger fouling, erosion, or corrosion, leading to premature component failure, reduced efficiency, heat exchanger failure or system failure. Failure of this type will not be warranted. If the water in use exceeds the conditions recommended, water softeners or other devices should be installed to improve water quality.

6B.2 NTV Piping Requirements

The water piping should be supported by suitable hangers and floor stands. Do not support the piping with this appliance. The hangers used should allow for expansion and contraction of copper pipe. Rigid hangers may transmit noise through the system resulting from piping sliding in the hangers. We recommend that padding be used when rigid hangers are installed. Maintain 1" (2.5 cm) clearance to combustibles for hot water pipes.

Pipe the discharge of the relief valve (full size) to the drain or in a manner to prevent injury in the event of pressure relief. Install a diaphragm-type expansion tank, flow check, and shutoff valves where needed or as required by code.

The piping should be installed so that each pump supplies flow only to the heater to which it is attached.

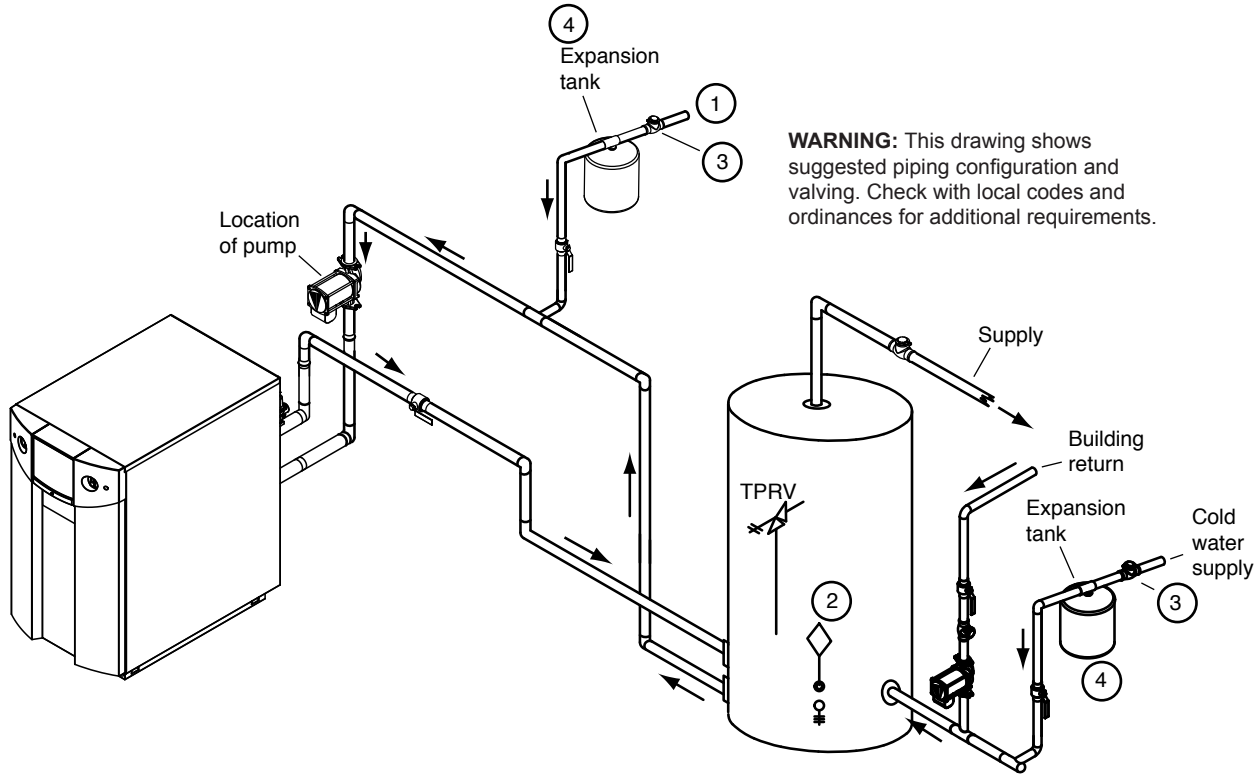

NOTES:

1. Optional CWMU & recirculation line location.
2. Locate NTV DHW sensor or remote aquastat well in lower 1/3 of tank.
3. Back flow preventer may be required - check local codes.
4. Thermal expansion tank may be required - check local codes.

Fig. 17 - DHW Piping - One Heater, One Vertical Tank

6B.3 NTV Cold Water Make-Up

The cold water make-up may be connected to the tank or to the inlet of the boiler as shown in Figures 17-19. Install back-flow preventers and shut-offs where needed or required by code.

6B.4 NTV Freeze Protection

The NTV unit must never be installed outdoors in a location which may experience freezing temperatures. If installed indoors, and there is an event such as a power outage, component failure or other issue when freezing is likely, the heater and system must be drained to avoid the risk of damage due to freezing. Glycol must ***not*** be used in volume water heating applications.

6B.5 NTV Suggested Piping Schematics

Figures 17-19 show suggested piping configurations for NTV boilers. These diagrams are only meant as guides. All components or piping required by local code must be installed.

NOTES:

1. Optional CWMU & recirculation line location.
2. Locate the NTV DHW sensor or remote aquastat well in lower 1/3 of tank.
3. Back flow preventer may be required - check local codes.
4. Thermal expansion tank may be required - check local codes.
5. **Caution: Pump sizing must be based upon water hardness at job site.**

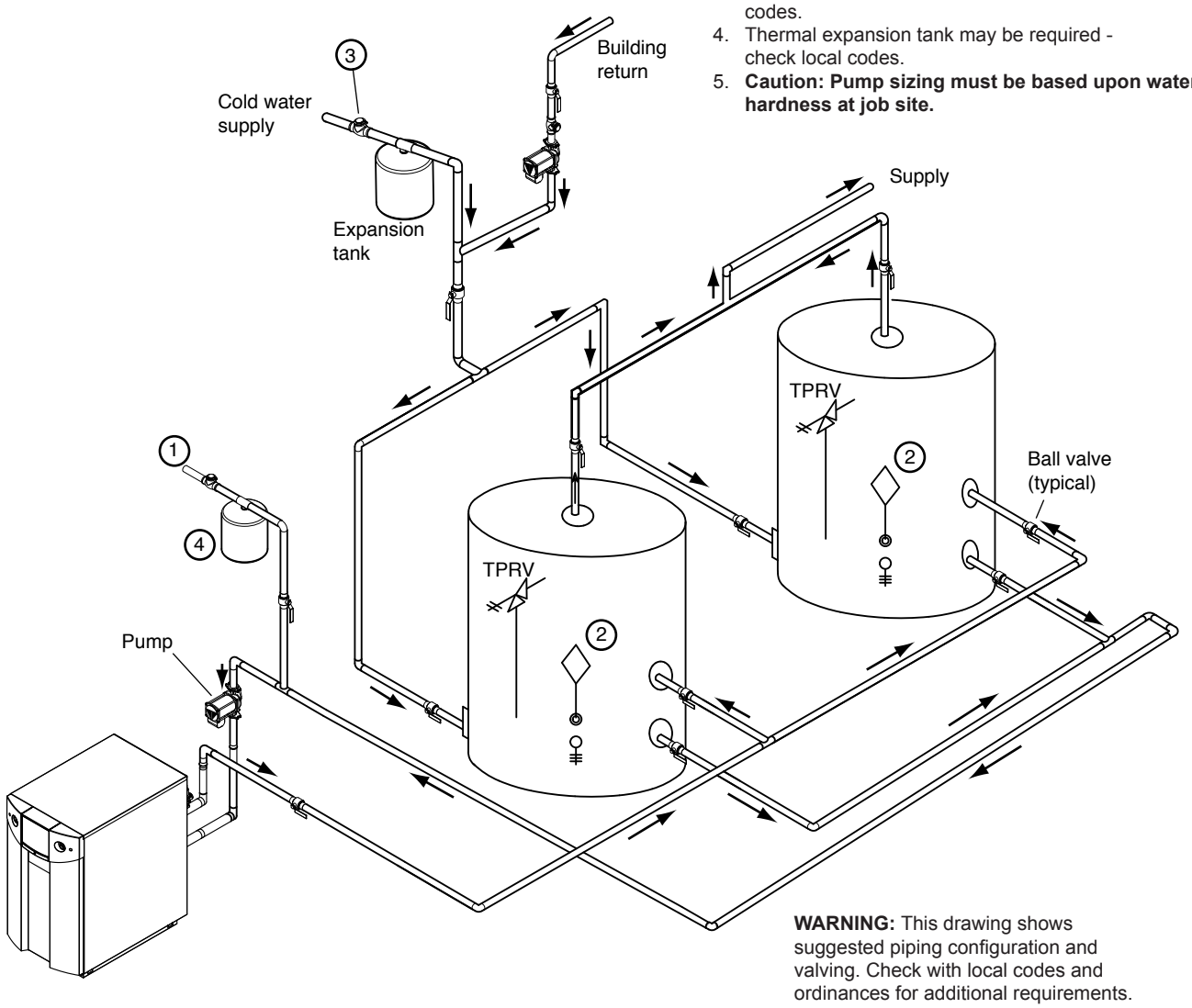

WARNING: This drawing shows suggested piping configuration and valving. Check with local codes and ordinances for additional requirements.

Fig. 18 - DHW Piping - One Heater, Two Vertical Tanks

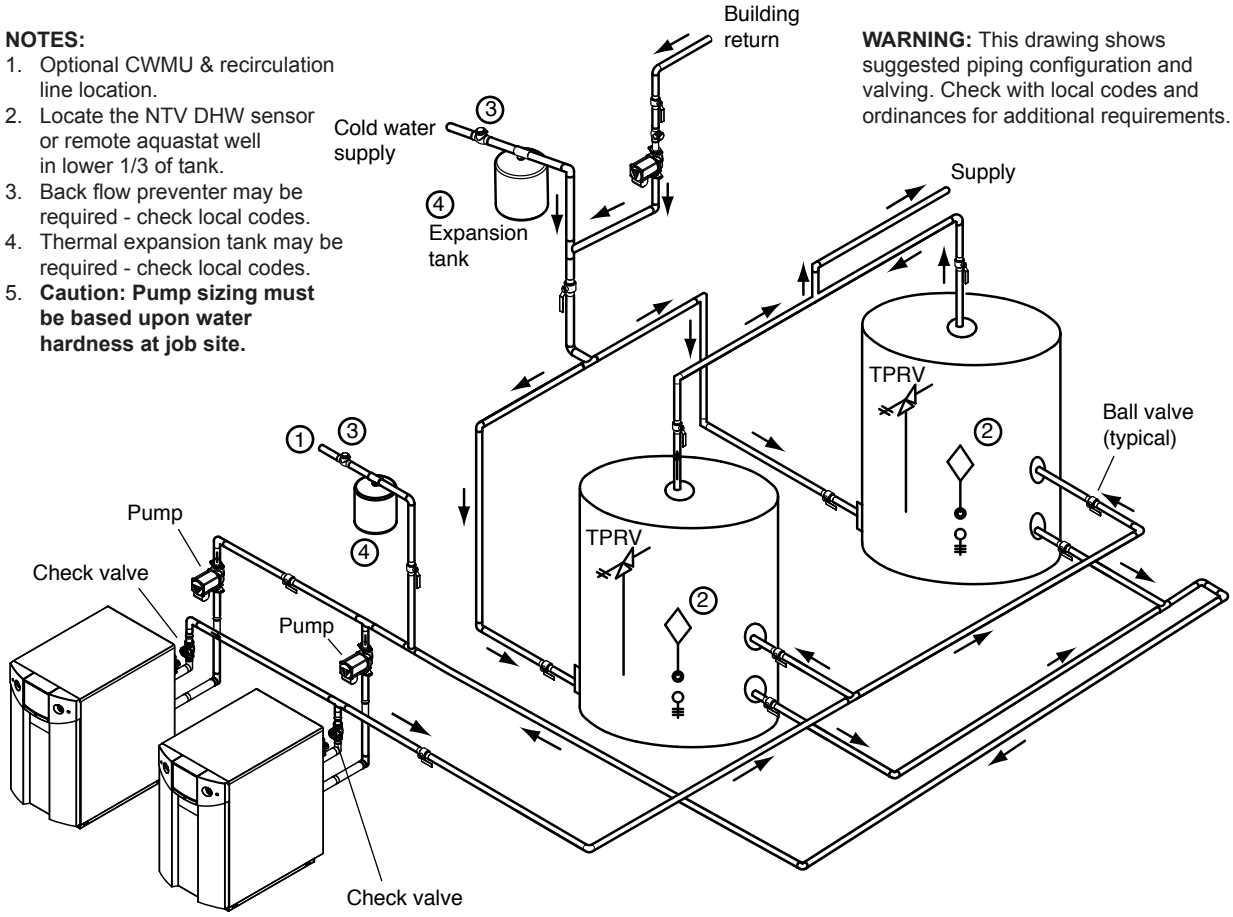

Fig. 19 - DHW Piping - Two Heaters, Two Vertical Tanks

6B.6 NTV Suggested Pumps

See Table 8 for water flow and head requirements.

Note - The head loss for the piping, fittings, and accessories must be calculated and added to the heater head loss to get the total required pump head. An undersized pump will result in insufficient flow. The can result in scale buildup and failure of the heat exchanger.

6B.7 Condensate Drain Trap

A condensate drain trap is included with the NeoTherm LC and is designed to drain the boiler of condensate. The vent condensate should be drained through a drain tee located in the vent line. This will help prevent excessive condensate from entering the boiler condensate trap and preventing the boiler from operating.

Connect a 3/4" PVC pipe between the drain connection and a floor drain (or condensate pump if a floor drain is not accessible).

The condensate drain must be installed to prevent the accumulation of condensate. When a condensate pump is not used, the tubing must continuously slope downward toward the drain with no spiraling.

Consult local codes for the disposal method.

⚠ Caution

Condensate is mildly acidic (pH=5), and may harm some floor drains and/or pipes, particularly those that are metal. Ensure that the drain, drainpipe, and anything that will come in contact with the condensate can withstand the acidity, or neutralize the condensate before disposal. **Damage caused by failure to install a neutralizer kit or to adequately treat condensate will not be the manufacturer's responsibility.**

Section 7
ELECTRICAL CONNECTIONS

⚠ WARNING

The NeoTherm LC appliance must be electrically grounded in accordance with the requirements of the authority having jurisdiction or, in the absence of such requirements, with the latest edition of the National Electrical Code, ANSI/NFPA 70, in the U.S. and with latest edition of CSA C22.1 Canadian Electrical Code, Part 1, in Canada. Do not rely on the gas or water piping to ground the metal parts of the boiler. Plastic pipe or dielectric unions may isolate the boiler electrically. Service and maintenance personnel who work on or around the boiler, may be standing on wet floors and could be electrocuted by an ungrounded boiler. Electrocution can result in severe injury or death.

Single pole switches, including those included in safety controls and protective devices, must not be wired in a grounded line.

All electrical connections are made on the terminal blocks that are located inside the control panel.

Note - All internal electrical components have been prewired. No attempt should be made to connect electrical wires to any other locations except the terminal blocks.

The wiring connections are shown in Figures 19 and 21.

Note - Do not make and break the line voltage to the NeoTherm LC as a signal to call for heat.

On a system operating as a Lead/Lag installation - A "call for heat/ end call for heat" ***must*** be connected to the Primary TT or Interlock terminals (terminals 5 and 6 on TB7) on the controller which is acting as the Lead/Lag master.

On a boiler operating individually - A "call for heat/ end call for heat" ***must*** be connected to the Primary Thermostat terminals (terminals 5 and 6 on TB7). Any jumper to the System terminals (terminals 3 and 4 on TB6) must be removed. For details, see Section 9.
Some NeoTherm LC components are designed to have constant voltage during normal operation. If the NeoTherm LC's supply voltage is toggled as a call for heat signal, premature failure of these components may result.

The NeoTherm LC does not recognize 4 mA as a signal to shut off. If the call for heat is not connected between the field interlock terminals, NeoTherm LC will remain in low fire when it sees 4 mA as a modulating signal.

⚠ Caution

The supply voltage to the NeoTherm LC must not be disengaged, except for service or isolation, or unless otherwise instructed by procedures outlined in this manual. To signal a call for heat, use the correct terminals as instructed in Section 9.

7.1 Main Power

For the convenience of the installer, a junction box has been placed at the rear of the boiler (internal) for power connections. These connections include three pre-stripped wires (black, white and green) for power connections.

For Model 1000 use a single 120-volt 15 Amp fused supply. For Model 1700 use a single 120-volt 30 Amp fused supply.

7.2 Pump Connections

The NeoTherm LC energizes the appropriate pump contacts when it receives a call for heat or domestic hot water. Once the call for heat or DHW is satisfied, the pump will remain on for the defined pump overrun time.

Note - The contacts for the System and DHW pumps are dry contacts. Appropriate voltage must be supplied to the System and DHW pumps for proper operation.

The Boiler pump is controlled in two different ways, depending on the NeoTherm LC model:

- On NeoTherm LC 1000 units the appliance will supply 120V single-phase power to the Boiler pump. The current supplied by this source cannot exceed 7.4 FLA. If more current is required, an additional relay/pump contactor must be installed. Wire the relay so it is energized from the contacts on the boiler to allow the pump to be turned on and off with the demand.
- On NeoTherm LC 1700 units the appliance will include a dry contact to operate the Boiler pump. The current from an alternate power source through this contact cannot exceed 7.4 FLA at 120V. If more current is required, then an additional relay/pump contactor must be installed and controlled by the boiler pump dry contacts.

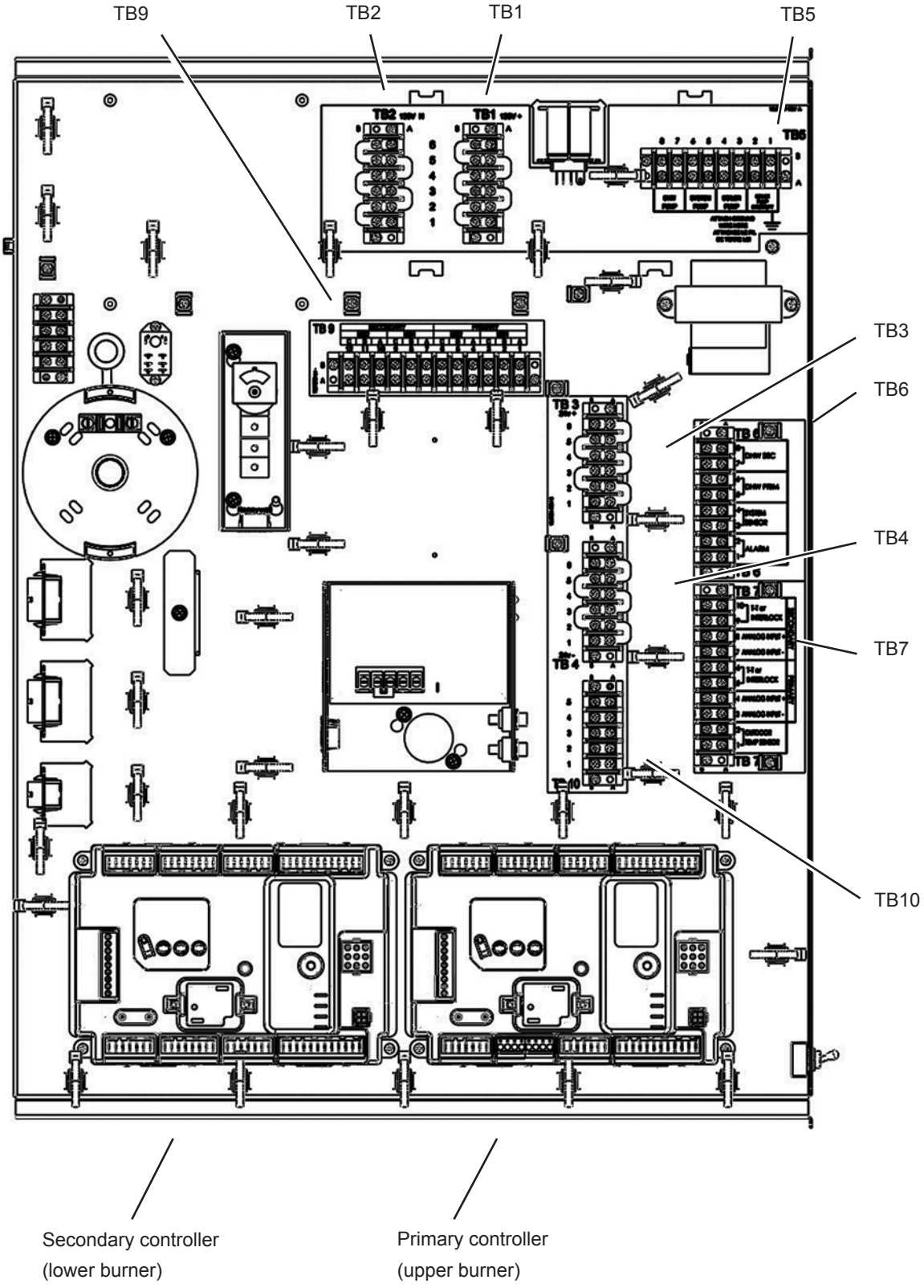

Fig. 20 - Electronics Panel Layout

Model	1,000	1,700
Voltage	120 V AC	120 V AC
Current - FLA	12 A	30 A
Current - Nominal	5 A	16 A

Table 10 - Electrical Data

The System pump connections are located on terminal block 5 (5-6 on TB5) in the control panel. (See Figure 20.) The System pump contacts are rated for 120 VAC, 7.4 Amps. To use the contacts, power must be supplied on one terminal with the other terminal wired to the relay controlling the pump.

The DHW pump connections are located on terminal block 5 (7-8 on TB5) in the control panel and are rated for 120 VAC, 7.4 Amps. To use the contacts, power must be supplied on one terminal, and the other terminal wired to the relay controlling the pump.

Additional 120 VAC circuits may be required for the pumps.

7.3 24 VAC Transformer with Integral Circuit Breaker

24 VAC is supplied by a transformer mounted on the control panel. All 24 VAC power is supplied through a circuit breaker that is part of the transformer. The transformer is then connected to terminal blocks 1 and 2 (TB1 and TB2).

7.4 Signal Connections

See Section 9 for details on the following connections:

- System sensor
- Call for heat/thermostat
- Outdoor air temperature sensor
- Aquastat for domestic hot water
- External control connections

7.5 Optional Field Connections

Optional components, such as low water cutoffs, flow switches, additional high limits and other field supplied devices can be installed as shown on the wiring diagram (Fig. 22).

7.6 Ladder and Wiring Diagrams

See Figures 21 and 22.

⚠ Caution

When servicing controls, label all wires prior to disconnection. Wiring errors can cause improper and dangerous operation. Verify proper operation after servicing

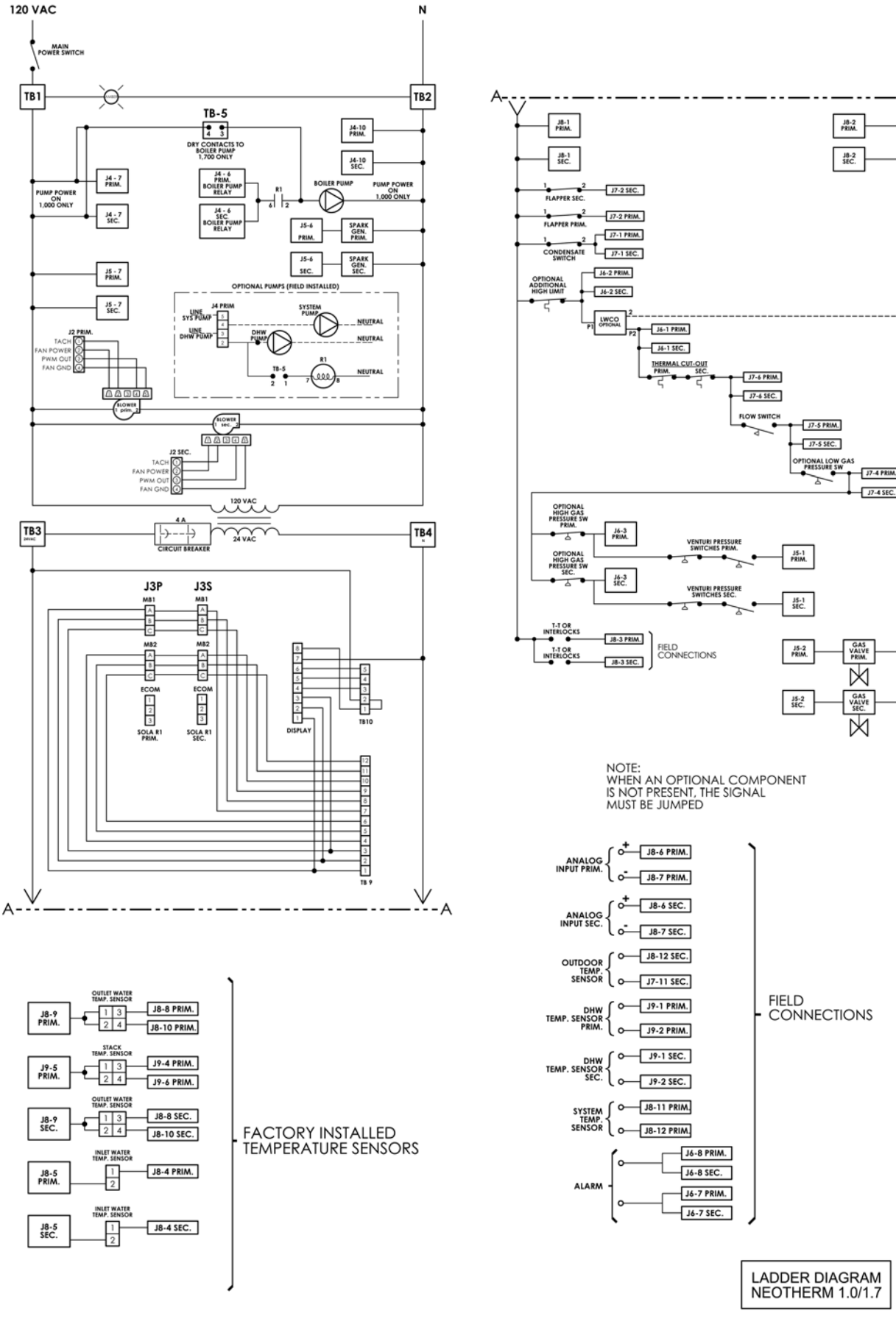

Fig. 21 - Ladder Diagram

WIRE COLOR ABBREVIATIONS			
BK	BLACK	OR	ORANGE
BK/O	BLACK/ORANGE	OR/BK	ORANGE/BLACK
BK/R	BLACK/RED	OR/W	ORANGE/WHITE
BK/V	BLACK/VIOLET	PK	PINK
BK/Y	BLACK/YELLOW	PK/BK	PINK/BLACK
BL	BLUE	PK/W	PINK/WHITE
BL/Y	BLUE/YELLOW	R	RED
BL/R	BLUE/RED	R/BK	RED/BLACK
BL/BK	BLUE/BLACK	TN	TAN
BL/G	BLUE/GREEN	TN/BL	TAN/BLUE
BL/R	BLUE/RED	TN/R	TAN/RED
BL/V	BLUE/VIOLET	TN/Y	TAN/YELLOW
BL/W	BLUE/WHITE	V	VIOLET
BN	BROWN	V/BK	VIOLET/BLACK
BN/BK	BROWN/BLACK	V/W	VIOLET/WHITE
BN/G	BROWN/GREEN	W	WHITE
BN/R	BROWN/RED	W/BL	WHITE/BLUE
BN/W	BROWN/WHITE	W/BK	WHITE/BLACK
BN/Y	BROWN/YELLOW	W/G	WHITE/GREEN
DKBL	DARK BLUE	W/GY	WHITE/GRAY
DKBL/Y	DARK BLUE/YELLOW	W/O	WHITE/ORANGE
G	GREEN	W/R	WHITE/RED
G/R	GREEN/RED	W/V	WHITE/VIOLET
GY	GRAY	Y	YELLOW
GY/BK	GRAY/BLACK	Y/BK	YELLOW/BLACK
GY/R	GRAY/RED	Y/G	YELLOW/GREEN
GY/V	GRAY/VIOLET	Y/R	YELLOW/RED
GY/W	GRAY/WHITE	Y/W	YELLOW/WHITE
LTBL/W	LIGHTBLUE/WHITE		

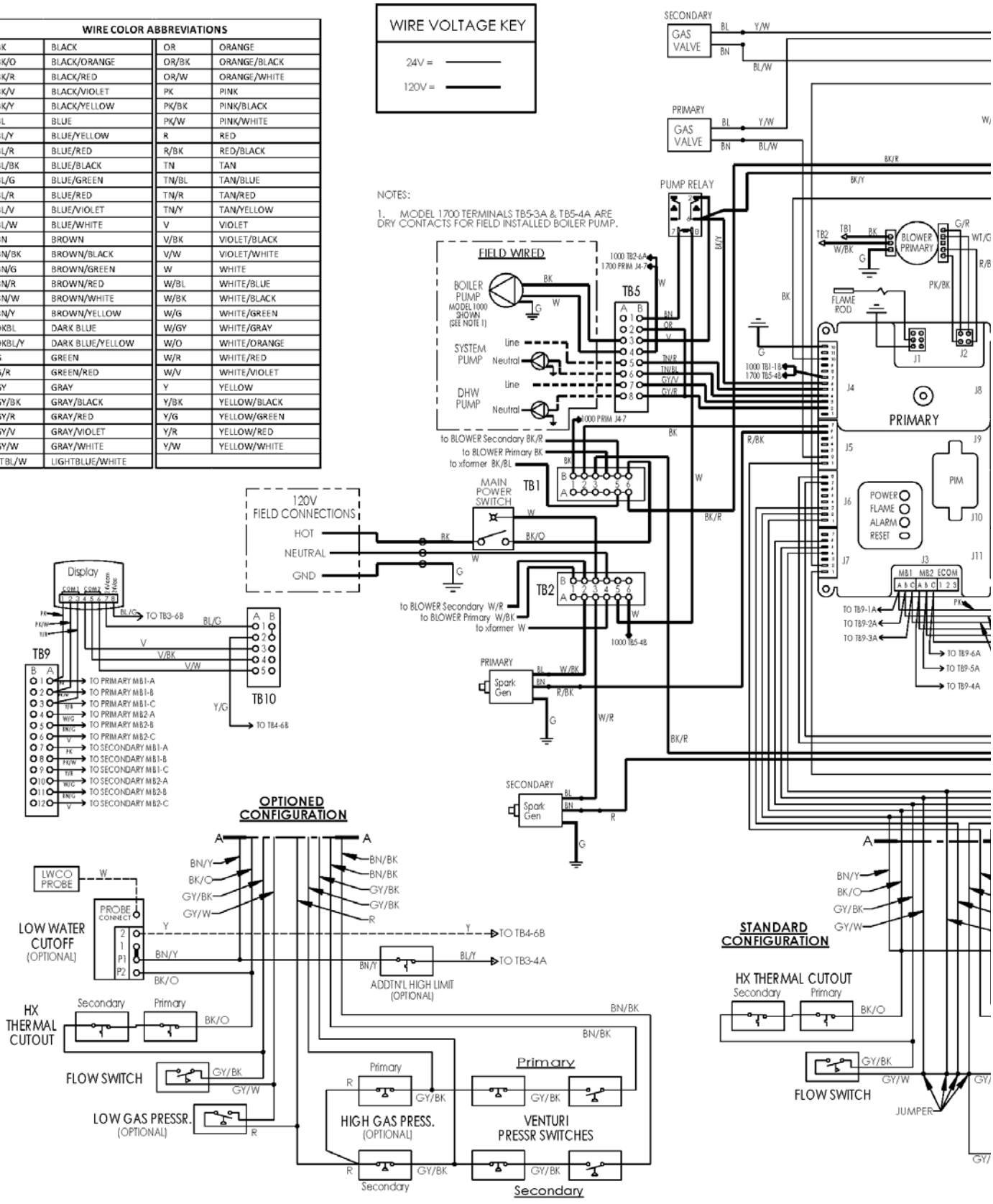

Fig. 22 - Wiring Diagram

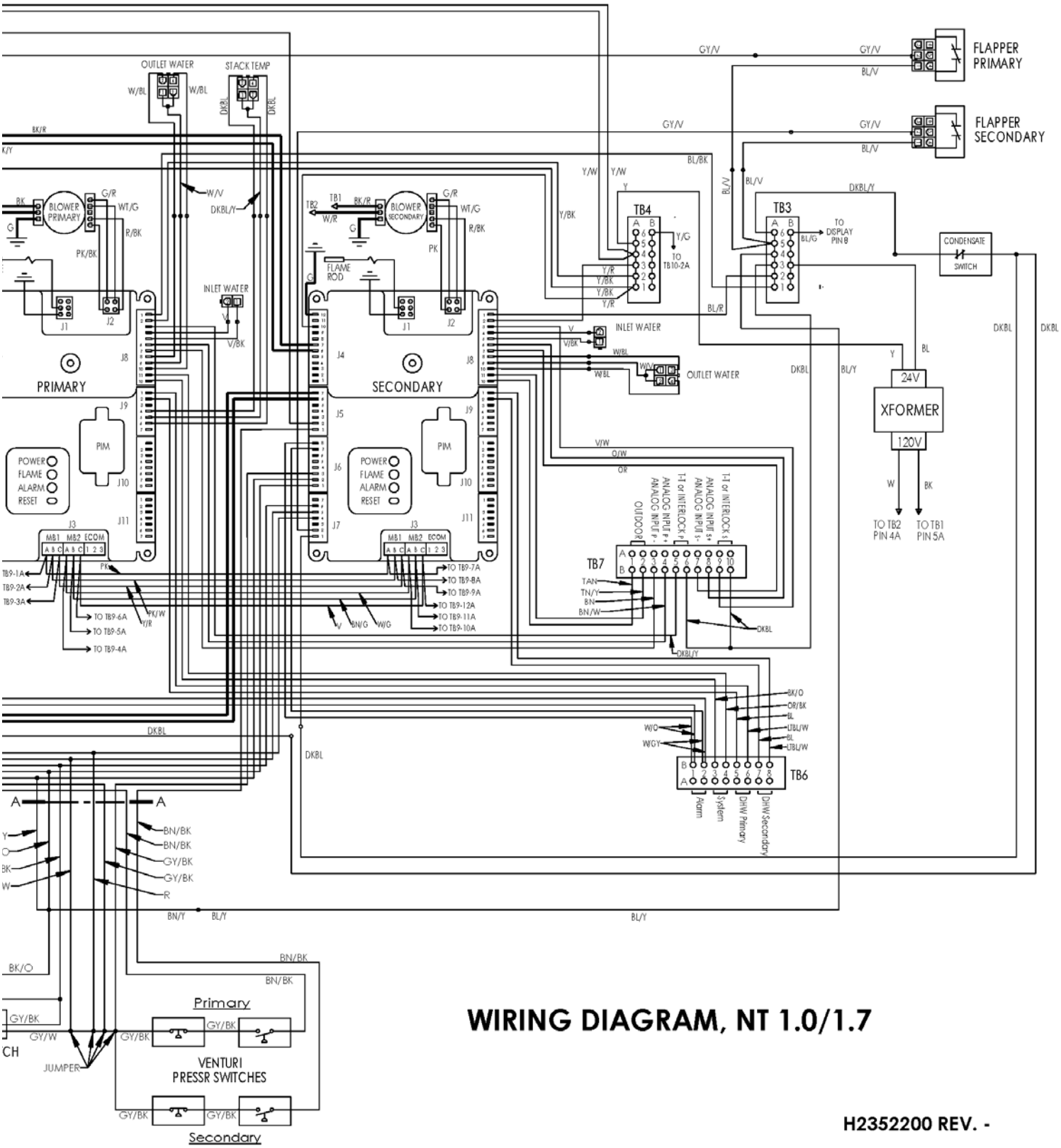

WIRING DIAGRAM, NT 1.0/1.7

H2352200 REV. -

Section 8
USING THE TOUCH SCREEN AND GAUGES

8.1 The Touch Screen and Gauges

There are only a few gauges on the front of the NeoTherm LC. See Fig. 23. Other than the On/Off switch, ALL of the control functions are done using the Touch Screen.

Fig. 23 - Touch Screen and Gauges

8.2 Using the Touch Screen

The NeoTherm LC uses a color Touch Screen to get input from the operator or installer, and to present information about the operation of the boiler. See Figs 23 and 24.

Fig. 24 - Touch Screen, shown with the 'home' screen of a single boiler configuration, all conditions normal. .

In multiple boiler configurations, each NeoTherm LC will still have it's own Touch Screen, but only the Touch Screen on the lead boiler will be active. Up to 8 controllers (4 boilers) can be displayed on the 'home' screen. See Fig. 24B

Fig. 24B - Touch Screen, shown with the 'home' screen of the lead boiler in a four boiler configuration, all conditions normal.

The icons on the 'home' screen for each controller may appear in one of four colors, indicating their basic operational status (See Section 8.3)

Almost all of the control functions are done using the Touch Screen There only a few functions that must be done manually by opening the front panel.

So let's get started by selecting the lead boiler control icon. Here's a typical screen or "page" presented by the system:

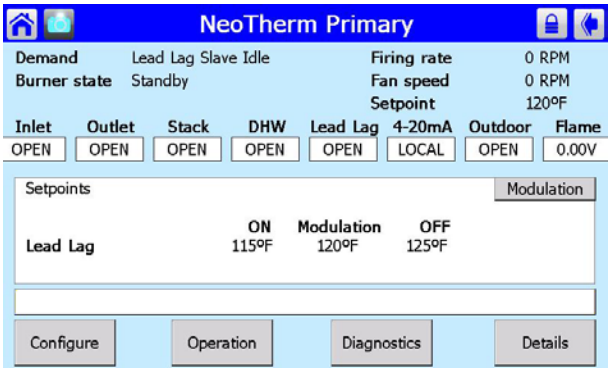

Fig. 25 - Status Summary Screen

There are some icons at the top of this screen (and most of the other screens) that will help you move around the system:

Home	Upper left-hand corner	Return to Home page
Bell	Upper left-hand corner	System in Lockout, Reset required
Padlock	Upper right-hand corner	Shows whether a password has been entered so parameters can be changed
Back	Upper right-hand corner	Return to previous screen

Sometimes a screen is used to present a list, and often the list is too long to present on a single screen view. To see the rest of the list, pull down on the bar on the right side of the screen, or use the up- and down-arrows.

To make a change, or to get more information about one of the items on the list, press on the line for that item.

If you are installing the system you will find many situations where you will need to enter a name or password. The control system includes three levels of password protection:

OEM Password	Setup and parameter changes made at the factory.
Installer Password	Setup and parameter changes made when the system is installed, and some diagnostic and troubleshooting functions. The installer level password is "lnt" (lower case "LNT.")
User Level	Non-critical adjustments and functions, including adjusting the Central Heat and Domestic Hot Water setpoints, monitoring the input and output variables, reading parameters from the controller, and reading the error log

(For some special safety-related functions, besides entering the correct password, the system will ask you to go through an additional "verification" process. For more information, see the section on "Configuration.")

When a password is necessary, the system will present the keyboard screen. See Fig. 26.

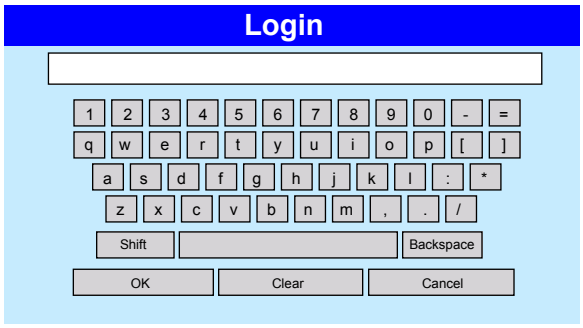

Fig. 26 - Keyboard Screen

The passwords used by this system are "case sensitive" – it matters whether a letter in the password is capitalized or not. Pressing the Shift key changes all of the keys to produce capital letters. Press Shift again to go back to lower-case letters. "BS" stands for "Back Space," and also works as a Delete key.

It may be difficult for some operators to press the small keys on this screen. In this case, use the back of a plastic pen, or the eraser section at the back of a pencil. (Do not use sharp metal tools – these will scratch the plastic surface of the screen.) You can also tap a key with the tip of your finger, using the fingernail. Each time you press a key, the system will respond with a beep. If you are entering a password, an asterisk (*) will appear for each character you enter. The beeps and asterisks will help you to enter the correct number of characters for your password.

The process would be the same if you wanted to change a numerical value, except that system would present a numeric entry screen. See Fig. 27.

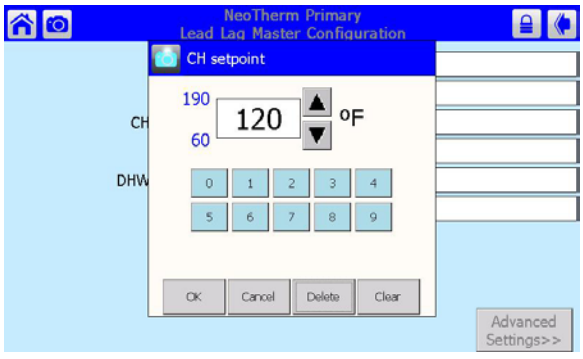

Fig. 27 - Numeric Entry Screen

Anyone can *view* all of the parameters. However, to *change* most of the parameters, you will need a password.

At the bottom of the screen shown in Fig. 28, the system is telling you that it wants you to log in.

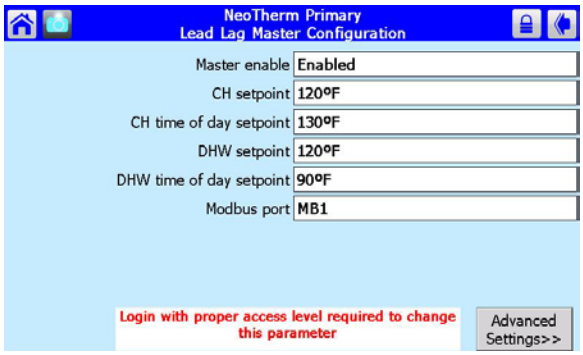

Fig. 28 - Login Required

The screen used to Login is similar to the Keyboard screen shown in Fig. 26.

8.3 While Operating - Checking Lead/Lag Operating Information

The Lead/Lag function controls the operation of all of the boilers connected to the system, and some system components. For a complete explanation of Lead/Lag, see the beginning of Section 9.

In this section, we will explain how to check the Lead/Lag information while the system is running.

1. Start at the 'home' screen (Fig. 29).

Fig. 29 - 'home' screen. Single NeoTherm system

Blue	Normal operation
Red	Lockout
Gray	Standby mode (Burner switch off)
Blue	Normal operation
Gray and crossed out	Communication problem
Yellow	Hold state. This could be Anti short cycle, fan speed transitions, etc.

2. Press the View Lead Lag button to go to a screen that shows the status of the whole Lead/Lag system. See Fig. 30.

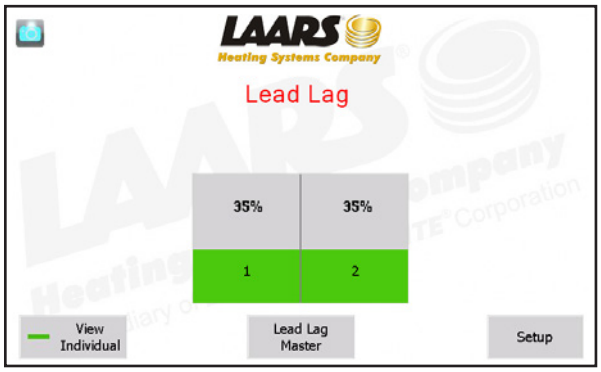

Fig. 30 - Lead/Lag Screen

In the example shown here, the complete system includes two burners. Both burners are firing at 35% fan speed.

8.4 Checking the Lead/Lag Master

The system also gives you a way to check some of the details of the Lead/Lag setup.

1. From the 'home' screen (Fig. 29), press the button for Lead/Lag Master.

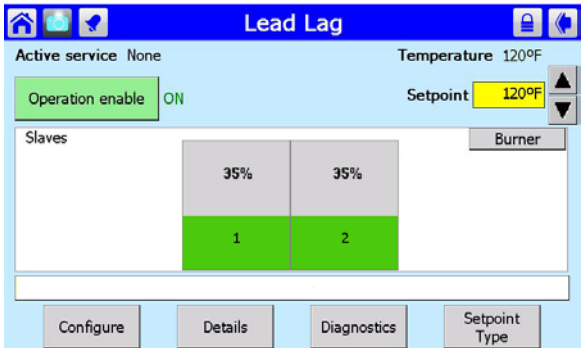

Fig. 31 - Lead/Lag Master Screen

2. You can change the setpoints from this screen. When you press the yellow box beside Setpoint, the controller presents this screen:

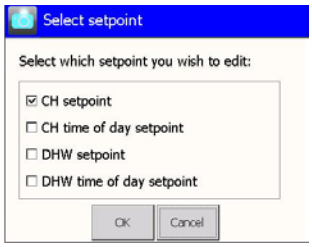

Fig. 32 - Setpoints Screen

Select the setpoint you want to change, then enter the new value

3. If you press the Details button, the control software leads you to a "ring" of screens that include some information about the way the Lead/Lag system is set up. The screens in this section are "read only" – you can read the values, but you cannot change them using these screens.

8.5 While Operating - Checking Individual Parameters

As we said, the Lead/Lag functions control the operation of the whole system. You might also want to check the functions on one of the individual controllers, and the system gives you a way to do this.

1. From the 'home' screen (Fig. 33), press the icon for the individual controller you want to check. In this example, we will press the icon on the left.

Fig. 33 - 'home' screen

2. The Status Summary page for that controller will appear. This shows the current operating condition of that controller, and also shows some of the configuration settings. See Fig. 34.

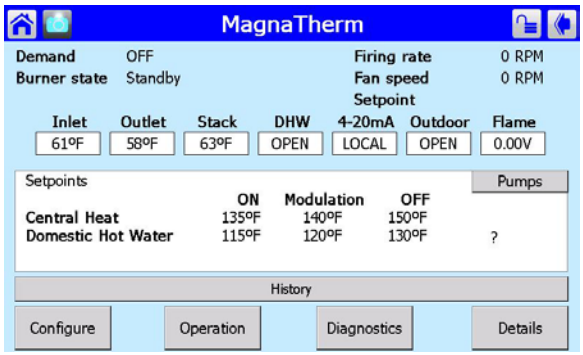

Fig. 34 - Status Summary Screen Showing Setpoint Information

Notice the four buttons at the bottom of each Status Summary screen:

- Configure – Allows an installer to change some of the setup parameters used by the system. A password may be required.
- Operation – Used to adjust the setpoints, change the fan speed, turn a burner on or off, or turn the pumps on or off.
- Diagnostics – Allows you to run diagnostic tests, or check the inputs and outputs used by the system.
- Details – Allows you to check the status of all of the setup parameters on the control system.

3. You can also press the button for Modulation (on the right side of the screen) to bring up another version of this screen showing modulation information. See Fig. 35.

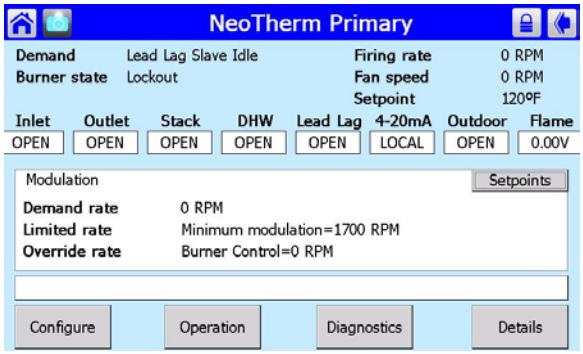

Fig. 35 - Status Summary Screen Showing Modulation Information

8.6 Checking Individual Details

The Details button on the Status Summary screen leads to a series of screens that show all of the setup parameters entered for the controller you have selected. Let's say that the first screen presented in this series is the screen for Frost Protection. See Fig. 36.

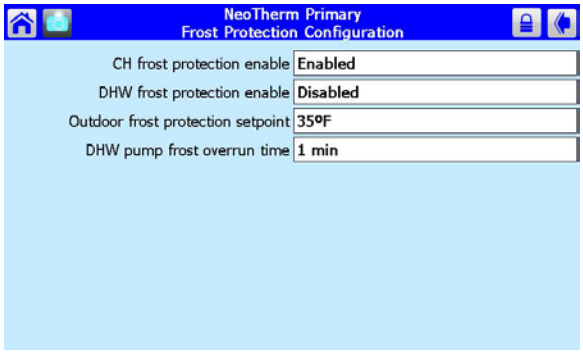

Fig. 36 - Typical Details Screen – Frost Protection

The list presented here is too long to fit onto a single screen, so you must scroll down to see the rest. The bar graph on the left side of the screen shows the current performance in relation to a setpoint or the total load or signal range.

You can get more detailed information on a parameter by touching the line for that parameter.

The screens presented under Details are "read only" – you can read the parameters, but you can't change them from these screens. (To go to screens that allow you to change the parameters, use the Configure button.)

The screen shown in Fig. 36 is part of a large loop that covers all of the parameters used by the system. To go to another part of the loop, press the left-arrow or right-arrow at the top of the screen. Here are the screens which are included in the loop:

Burner Control
Demand and Modulation
Fan
DHW Pump
Boiler Pump
System Pump
Flame Detection
Statistics
Stack Limit
CH Frost Protection
Lead Lag Slave
Lead Lag Master

8.7 Configuring Parameters on Individual Controllers

In this section, we will just give you a quick explanation of how to change parameters on one of the controllers. (This is an individual function. You would set this kind of parameter on one controller at a time.)

The NeoTherm LC unit is always set up for "Lead/Lag" operation, so most of your configuration changes would be made using the Lead/Lag section of the control software, and this uses a different procedure. (A Lead/Lag parameter controls a collective function. You change one parameter that controls the whole Lead/Lag system, and all of the controllers at once.) For an explanation of the Lead/Lag setup, see Section 9.1.

For now, we'll explain how to change a setting on just a single controller.

1. From the Home Page screen (Fig. 37), press the icon for the controller you want to configure. In this example, we will change some settings for the Primary controller, so we will press the icon on the left.

Fig. 37 - Home Page Screen

2. The Status Summary page for that controller will appear. See Fig. 38.

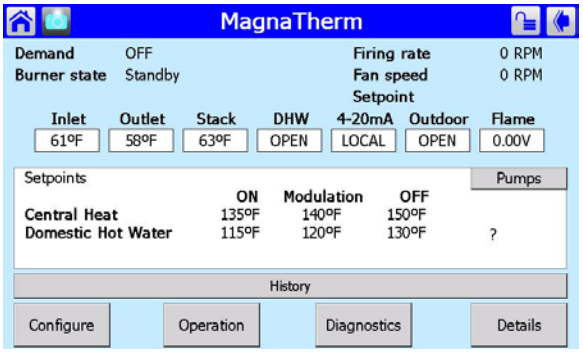

Fig. 38 - Status Summary Page

3. Press the Configure button to start a configuration session for the selected controller. See Fig. 39.

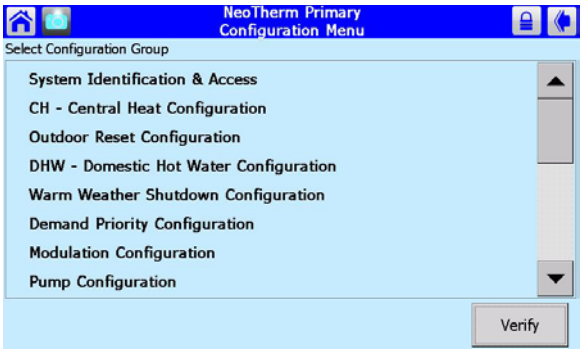

Fig. 39 - Configuration Screen

This screen lists all of the configuration groups. (The list is actually longer – scroll down using the bar on the right side of the screen.) Many of the items will not be useful to an installer or end-user.

4. Next, we will show you how to change one of these parameters. Let's turn on the Central Heat function. On the Configuration Screen (Fig. 39), scroll down and press the line for CH – Central Heat Configuration. Figure 40 shows the screen which follows.

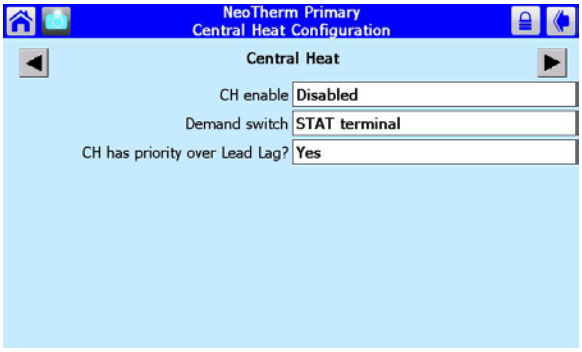

Fig. 40 - Central Heat Configuration

On the screen, you can see the Central Heat function is currently disabled. To turn on the Central Heat function, press the space beside CH Enable. The system will tell you that you must login and enter a password to change this entry.

5. The process would be the same if you wanted to change a numerical value, except that system would present a numeric entry screen. See Fig. 41.

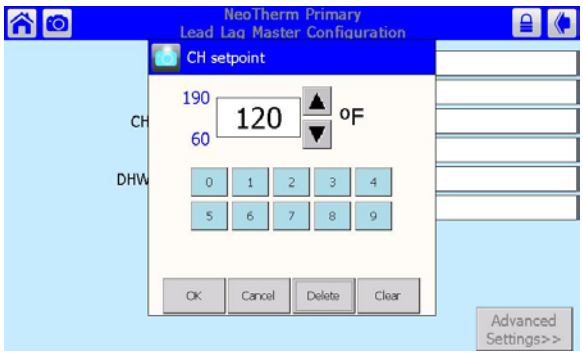

Fig. 41 - Numeric Entry Screen

8.8 Verification Process for Safety-Related Parameters

1. When you start to change a parameter that is related to safety, the system will present a warning which looks like this:

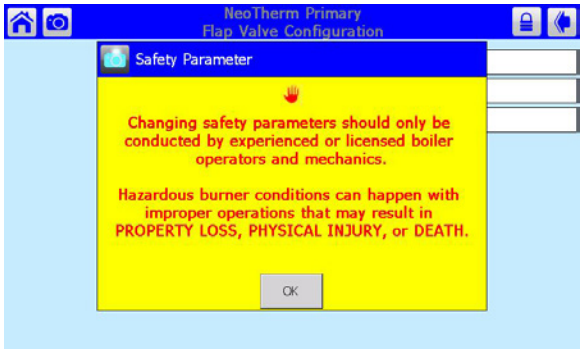

Fig. 42 - Parameter Safety Warning

Press OK to continue. The system will ask you to login before you make a change. (For more information on logging in, see Section 8.2.)

Note that any changes you make will apply only to one controller – the controller you have already selected. If you want the same change to apply to other controllers, you must change each of them separately.

2. If you make a change in any group that could affect the safe operation of the unit, the control system will ask you to "verify" the change before it is accepted. As an example, let's say that we wanted to change the configuration for one of the flap valves. See Fig. 43. A line printed in red at the bottom of the screen indicates that the system wants to do a safety verification. (All of the parameters in this group have safety-related functions. If you change any of them, you will have to do the verification for the whole group.)

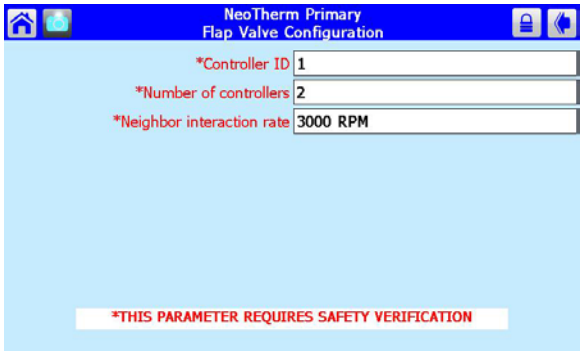

Fig. 43 - Verification Needed

Notes –

- Once you change one of these safety-related parameters, you ***must*** finish the verification process for the group that includes the parameter, ***or the control system will not let the boiler operate***. You can wait to do the verification until you have changed parameters in other groups, but before you return the boiler to service, you have to do the verification for all of the groups you changed.
- At the end of the verification process, you must press the Reset button on the front of the controller. See Fig. 44. You have to do this within 30 seconds, or the verification will be cancelled. To make it easy to reach the Reset button, open the door on the front of the boiler and slide out the control panel ***before*** beginning the verification.

Fig. 44 - Reset Button on Controller

3. Don't press the Reset button yet. We just want to show you where the Reset button is located.

   Change the parameter(s) you want to change.

4. When you are done entering parameters, the next job is to do the verification. Login to the system and press Begin.

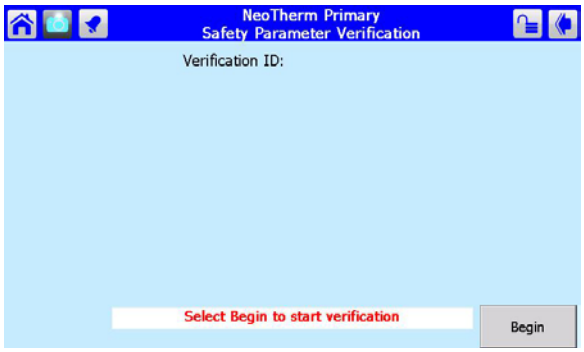

Fig. 45 - Edit Safety Data

5. Once you are done changing safety parameters, press Confirm. The system will present a listing for each group of parameters which includes a changed safety parameter. See Fig. 46.

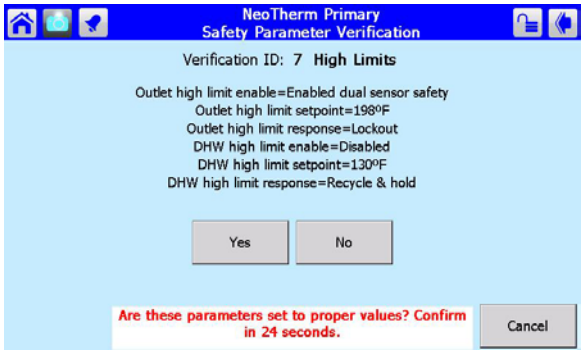

Fig. 46 - Safety Parameter Confirmation

6. For each group, check the list carefully. Press Yes if all of the parameters in the group have been entered correctly.

   If you made changes in other safety-related groups, verify the entries in those groups in the same way. When the process is complete, the system will tell you to reset the control system.

Fig. 47 - Safety Parameter Reset

7. The Reset button is located on the front of the controller. See Fig. 44. You must press the Reset button within 30 seconds, or the verification will be cancelled.

Section 9
SETUP AND CONFIGURATION

9.1 Review of Lead/Lag Control System

9.1.1 About Lead/Lag Operation

The boilers in this series are always set up for Lead/Lag operation. In a single-boiler installation, there are two controllers and two burners, as shown in Fig. 49. The controller for the upper burner is set up as the Primary control. For control purposes, this is the Lead/Lag Master and also operates as Lead/Lag Slave 1. The control for the lower burner is set up as the Secondary control and operates as Lead/Lag Slave 2.

On a multiple-boiler installation, each individual boiler is still set up as shown in Fig. 48. The boiler controls are arranged in a "daisy chain" using a Modbus connection, with the Secondary control of one boiler connected to the Primary control of the next boiler. Up to four boilers, with up to eight controllers, can be connected in this way. See Fig. 49.

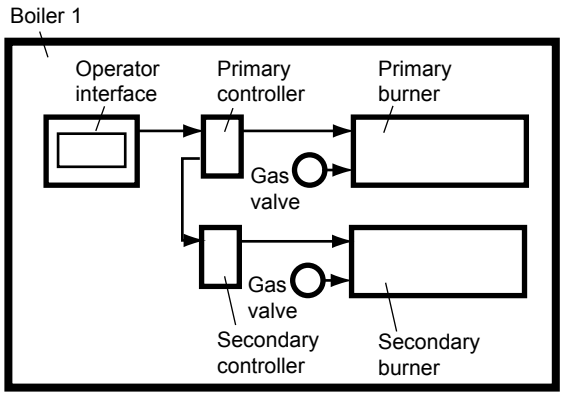

Fig. 48 – Lead/Lag Arrangement in a Single-Boiler Installation

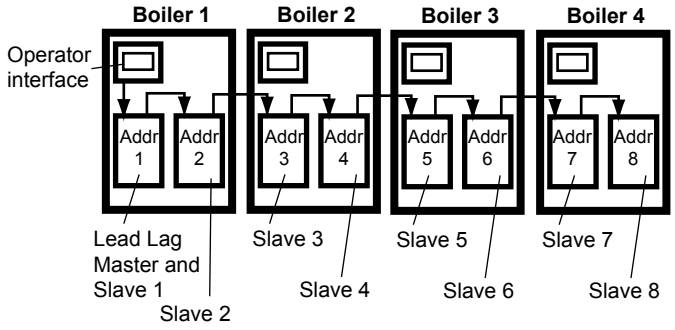

Fig. 49 – Lead/Lag Arrangement in a Multiple-Boiler Installation

In either kind of installation, a system sensor is usually used to monitor the demand. The input from this sensor is used to control the modulation rates of the operating burners.

Let's consider the following example:

Four NeoTherm LC boilers are tied together via Modbus connections. Here are the Master/Slave assignments and the Modbus control addresses:

Table 11 – Master/Slave Assignments and Modbus Control Addresses

Boiler	Burner Position	Control	Master/Slave Assignment	Modbus Control Address
1	Upper	Primary	Lead/Lag Master, also Slave 1	1
1	Lower	Secondary	Slave 2	2
2	Upper	Primary	Slave 3	3
2	Lower	Secondary	Slave 4	4
3	Upper	Primary	Slave 5	5
3	Lower	Secondary	Slave 6	6
4	Upper	Primary	Slave 7	7
4	Lower	Secondary	Slave 8	8

9.1.2 Lead/Lag Modulation Cycle

Note - We will explain the modulation cycle here, in case you need to understand how the Lead/Lag system actually operates. If you are just installing the unit(s) and want to skip this section, just remember that, as the heating demand increases, the Lead/Lag system puts more burners on-line. As the heating demand is reduced, the Lead/Lag system shuts off some of the burners.

A Run sequence is initiated when the system temperature falls to the setpoint less the On Hysteresis value. The default setting for On Hysteresis is -5°F, but this is adjustable. The setpoint used to initiate the Run sequence is the Lead/Lag Central Heat setpoint.)

The Lead/Lag controller decides which burner is assigned to start first. This assignment is rotated across all of the available burners so that any one burner does not run significantly longer than the others. The Lead/Lag controller tracks the run times for all of the available burners, and uses this to calculate the starting order for the burners. This means that each time the system starts up, a different burner may start first. It also means that the Primary burner on a particular boiler may start first one time, and the Secondary burner for that boiler may start first the next time.

When the Run sequence is initiated, the burner with the least amount of runtime will fire. If the heating demand increases so that the firing rate of that first burner rises to 65% fan speed (the Base Load value), the next burner in the sequence will start up and begin firing at 35% fan speed. After this, both of the active burners will modulate up or down together, in reaction to the changes in demand. See Fig. 50.

If the system loop temperature rises above the LL CH setpoint, then the two burners will simultaneously drop their fan speeds. If both boilers drop to their minimum fan speeds (29%), then the second burner will drop out.

If the heating demand continues to increase, and the system loop temperature continues to drop, then the two burners will increase their fan speeds together. When they reach 65%, the next burner in the sequence will start up and be added to the group. All three boilers will continue to fire simultaneously at equal input rates.

If the modulation rate for all three burners drops to the minimum fan speed (29%), the last burner started will drop out. If the demand continues to drop, the second burner started will also drop out.

If the system temperature reaches the LL CH setpoint value plus the Off Hysteresis figure, all of the burners will shut off. (The default setting for Off Hysteresis is +5°F, but this is adjustable.)

If any of the boilers approaches its high limit temperature, that boiler will modulate back to stay below the high limit.

As the heating demand continues to change, the Lead/Lag Master will continue to add, remove, or modulate the additional boilers in the system.

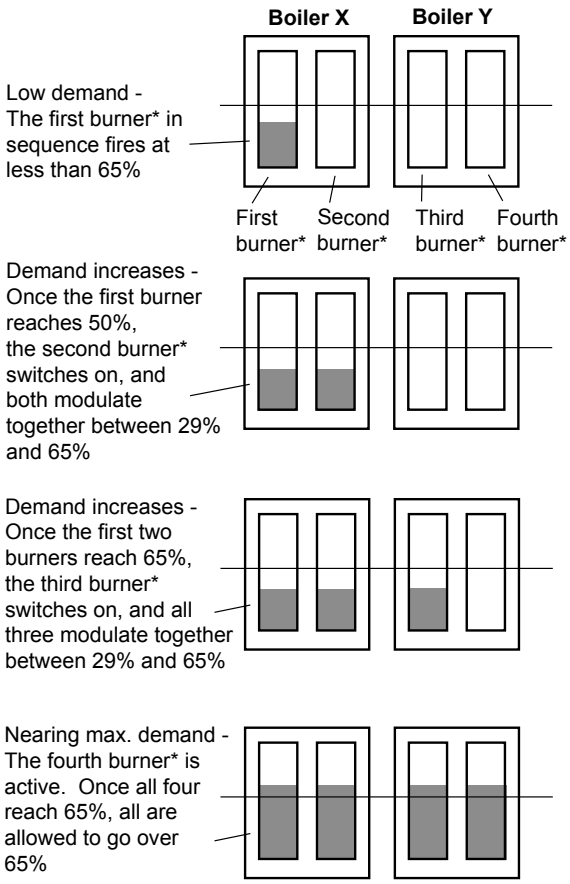

* - The Lead/Lag controller will change the firing order of the burners, based on the run time of each burner.

Fig. 50 – Lead/Lag Activity in a Multi-Boiler System

9.1.3 NTH Lead/Lag with Indirect Domestic Hot Water

So far, we have been describing a system which handles the Central Heat function only. There are several ways the Domestic Hot Water can be set up on a Lead/Lag system. For a detailed description, see Section 9.5.

9.2 Connection Terminals

Figure 51 shows some of the connection terminals on the circuit board inside the cabinet.

⚠ WARNING

Before connecting or disconnecting any wiring inside a boiler, be absolutely sure to turn off all electrical power to the unit. Failure to do this could result in property damage, serious injury or death.

9.3 NeoTherm LC System Configurations

NeoTherm LC's can be installed in many different arrangements. The steps in the installation will be different, depending on the number of boilers in the system, the venting arrangements, the control signals used, and so on. In this section, we will list the steps necessary to do the most common installations.

1. Table 12 lists most of the common configurations for NeoTherm LC systems. Look through the table until you find a line that exactly describes your system. Make a note of the system number shown in the left column.
2. Following the table, look up the specific installation jobs for your system in Section 9.4. The jobs are identified using letters (Job A through Job P).

   If you are not familiar with the NeoTherm LC's or the Lead/Lag control system, you may want to review the information in Section 9.1. This may be helpful as you read the installation instructions which follow.

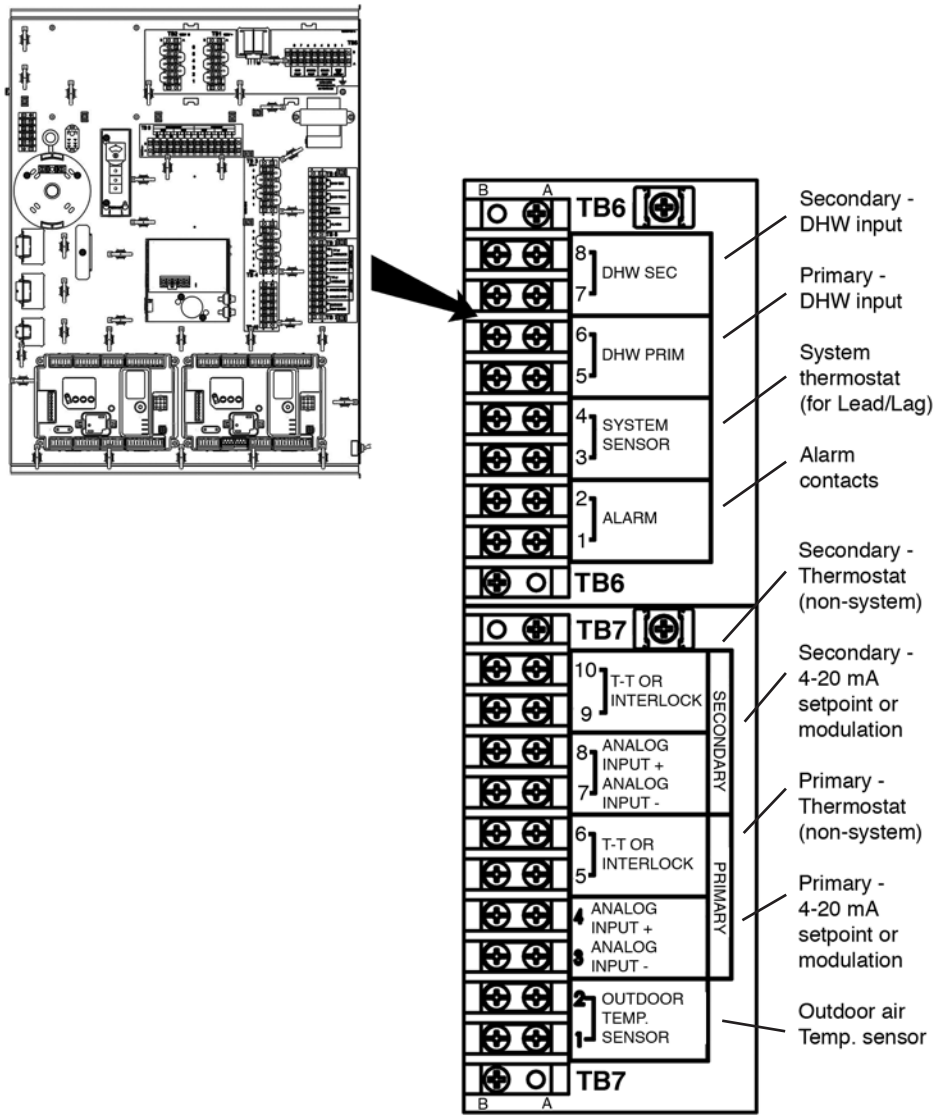

Fig. 51 – Connection Terminals

Table 12 – Installations for Special Options

System	Multiple or single boilers	System or local boiler control	Common vent	Setpoint control 4-20 ma	Modulation control, 4-20 ma	Outdoor reset
1	Single boiler	Local	No	No	No	No
2	Single boiler	Local	No	No	No	Yes
3	Multiple boiler	Local	No	No	No	No
4	Multiple boiler	Local	No	No	No	Yes
5	Multiple boiler	Local	Yes	No	No	No
6	Multiple boiler	Local	Yes	No	No	Yes
7	Single boiler	System	No	No	No	No
8	Single boiler	System	No	No	No	Yes, from system
9	Multiple boiler	System	No	No	No	No
10	Multiple boiler	System	No	No	No	Yes, from system
11	Single boiler	System	No	Yes	No	No
12	Single boiler	System	No	Yes	No	Yes, from system
13	Multiple boiler	System	No	Yes	No	No
14	Multiple boiler	System	No	Yes	No	Yes, from system
System	Multiple or single boilers	System or local boiler control	Common vent	Setpoint control 4-20 ma	Modulation control, 4-20 ma	Outdoor reset

Table 12 – Installations for Special Options (continued)

15	Single boiler	System	No	No	Yes	No
16	Single boiler	System	No	No	Yes	Yes, from system
17	Multiple boiler	System	No	No	Yes	No
18	Multiple boiler	System	No	No	Yes	Yes, from system
19	Multiple boiler	System	Yes	Yes	No	No
20	Multiple boiler	System	Yes	Yes	No	Yes, from system
21	Multiple boiler	System	Yes	No	Yes	No
22	Multiple boiler	System	Yes	No	Yes	Yes, from system

System 1 –
Single boiler, Local control
Job I Set the parameters used by the Lead/Lag system
Job J Install the System sensor and adjust the setpoint
Job O Set up the combustion on each of the burners
Job P Set the date and time on the system

System 2 –
Single boiler, Local control, Outdoor reset
Job I Set the parameters used by the Lead/Lag system
Job J Install the System sensor and adjust the setpoint
Job K Lead/Lag outdoor reset and warm weather shutdown
Job O Set up the combustion on each of the burners
Job P Set the date and time on the system

System 3 –
Multiple boilers, Local control
Job B Set up the names for each of the controllers
Job C Make one control the Lead/Lag master
Job D On each of the controllers that will act as a slave, disable the Lead/Lag Master
Job E Set up the Modbus control addressing to assign addresses for each of the controls
Job F Set up the addresses for the flap valves
Job G Disconnect the Touch Screens that will not be used
Job H Connect the Modbus wiring
Job I Set the parameters used by the Lead/Lag system
Job J Install the System sensor and adjust the setpoint
Job O Set up the combustion on each of the burners
Job P Set the date and time on the system

System 4 –
Multiple boilers, Local control, Outdoor reset

Job B Set up the names for each of the controllers
Job C Make one control the Lead/Lag master
Job D On each of the controllers that will act as a slave, disable the Lead/Lag Master
Job E Set up the Modbus control addressing to assign addresses for each of the controls
Job F Set up the addresses for the flap valves
Job G Disconnect the Touch Screens that will not be used
Job H Connect the Modbus wiring
Job I Set the parameters used by the Lead/Lag system
Job J Install the System sensor and adjust the setpoint
Job K Lead/Lag outdoor reset and warm weather shutdown
Job O Set up the combustion on each of the burners
Job P Set the date and time on the system

System 5 –
Multiple boilers, Local control, Common vent

Job A Note on common venting
Job B Set up the names for each of the controllers
Job C Make one control the Lead/Lag master
Job D On each of the controllers that will act as a slave, disable the Lead/Lag Master
Job E Set up the Modbus control addressing to assign addresses for each of the controls
Job F Set up the addresses for the flap valves
Job G Disconnect the Touch Screens that will not be used
Job H Connect the Modbus wiring
Job I Set the parameters used by the Lead/Lag system
Job J Install the System sensor and adjust the setpoint
Job O Set up the combustion on each of the burners
Job P Set the date and time on the system

System 6 –
Multiple boilers, Local control, Common vent, Outdoor reset

Job A Note on common venting
Job B Set up the names for each of the controllers
Job C Make one control the Lead/Lag master
Job D On each of the controllers that will act as a slave, disable the Lead/Lag Master
Job E Set up the Modbus control addressing to assign addresses for each of the controls
Job F Set up the addresses for the flap valves
Job G Disconnect the Touch Screens that will not be used
Job H Connect the Modbus wiring
Job I Set the parameters used by the Lead/Lag system
Job J Install the System sensor and adjust the setpoint
Job K Lead/Lag outdoor reset and warm weather shutdown
Job O Set up the combustion on each of the burners
Job P Set the date and time on the system

System 7 –
Single boiler, System control
Job I Set the parameters used by the Lead/Lag system
Job L Building automation or multiple boiler control thermostat demand
Job O Set up the combustion on each of the burners
Job P Set the date and time on the system

System 8 –
Single boiler, System control, Outdoor reset
Job I Set the parameters used by the Lead/Lag system
Job L Building automation or multiple boiler control thermostat demand
Job K Lead/Lag outdoor reset and warm weather shutdown
Job O Set up the combustion on each of the burners
Job P Set the date and time on the system

System 9 –
Multiple boiler, System control, Outdoor reset
Job B Set up the names for each of the controllers
Job C Make one control the Lead/Lag master
Job D On each of the controllers that will act as a slave, disable the Lead/Lag Master
Job E Set up the Modbus control addressing to assign addresses for each of the controls
Job F Set up the addresses for the flap valves
Job G Disconnect the Touch Screens that will not be used
Job H Connect the Modbus wiring
Job I Set the parameters used by the Lead/Lag system
Job L Building automation or multiple boiler control thermostat demand
Job O Set up the combustion on each of the burners
Job P Set the date and time on the system

System 10 –
Multiple boiler, System control, Outdoor reset
Job B Set up the names for each of the controllers
Job C Make one control the Lead/Lag master
Job D On each of the controllers that will act as a slave, disable the Lead/Lag Master
Job E Set up the Modbus control addressing to assign addresses for each of the controls
Job F Set up the addresses for the flap valves
Job G Disconnect the Touch Screens that will not be used
Job H Connect the Modbus wiring
Job I Set the parameters used by the Lead/Lag system
Job L Building automation or multiple boiler control thermostat demand
Job K Lead/Lag outdoor reset and warm weather shutdown
Job O Set up the combustion on each of the burners
Job P Set the date and time on the system

System 11 –
Single boiler, System control, 4-20 mA setpoint control
Job I Set the parameters used by the Lead/Lag system
Job M Building automation or multiple boiler control 4-20 mA setpoint control
Job O Set up the combustion on each of the burners
Job P Set the date and time on the system

System 12 –
Single boiler, System control, 4-20 mA setpoint control, Outdoor reset
Job I Set the parameters used by the Lead/Lag system
Job M Building automation or multiple boiler control 4-20 mA setpoint control
Job K Lead/Lag outdoor reset and warm weather shutdown
Job O Set up the combustion on each of the burners
Job P Set the date and time on the system

System 13 –
Multiple boiler, System control, 4-20 mA setpoint control
Job B Set up the names for each of the controllers
Job C Make one control the Lead/Lag master
Job D On each of the controllers that will act as a slave, disable the Lead/Lag Master
Job E Set up the Modbus control addressing to assign addresses for each of the controls
Job F Set up the addresses for the flap valves
Job G Disconnect the Touch Screens that will not be used
Job H Connect the Modbus wiring
Job I Set the parameters used by the Lead/Lag system
Job L Building automation or multiple boiler control thermostat demand
Job M Building automation or multiple boiler control 4-20 mA setpoint control
Job O Set up the combustion on each of the burners
Job P Set the date and time on the system

System 14 –
Multiple boiler, System control, 4-20 mA setpoint control, Outdoor reset
Job B Set up the names for each of the controllers
Job C Make one control the Lead/Lag master
Job D On each of the controllers that will act as a slave, disable the Lead/Lag Master
Job E Set up the Modbus control addressing to assign addresses for each of the controls
Job F Set up the addresses for the flap valves
Job G Disconnect the Touch Screens that will not be used
Job H Connect the Modbus wiring
Job I Set the parameters used by the Lead/Lag system
Job M Building automation or multiple boiler control 4-20 mA setpoint control
Job K Lead/Lag outdoor reset and warm weather shutdown
Job O Set up the combustion on each of the burners
Job P Set the date and time on the system

System 15 –
Single boiler, System control, 4-20 mA modulation control
Job N Building automation or multiple boiler control 4-20 mA modulation control
Job O Set up the combustion on each of the burners
Job P Set the date and time on the system

System 16 –
Single boiler, System control, 4-20 mA modulation control, Outdoor reset
Job N Building automation or multiple boiler control 4-20 mA modulation control
Job O Set up the combustion on each of the burners
Job P Set the date and time on the system

System 17 –
Multiple boiler, System control, 4-20 mA modulation control
Job N Building automation or multiple boiler control 4-20 mA modulation control
Job O Set up the combustion on each of the burners
Job P Set the date and time on the system

System 18 –
Multiple boiler, System control, 4-20 mA modulation control, Outdoor reset
Job N Building automation or multiple boiler control 4-20 mA modulation control
Job O Set up the combustion on each of the burners
Job P Set the date and time on the system

System 19 –
Multiple boiler, System control, Common vent, 4-20 mA setpoint control
Job A Note on common venting
Job B Set up the names for each of the controllers
Job C Make one control the Lead/Lag master
Job D On each of the controllers that will act as a slave, disable the Lead/Lag Master
Job E Set up the Modbus control addressing to assign addresses for each of the controls
Job F Set up the addresses for the flap valves
Job G Disconnect the Touch Screens that will not be used
Job H Connect the Modbus wiring
Job I Set the parameters used by the Lead/Lag system
Job M Building automation or multiple boiler control 4-20 mA setpoint control
Job O Set up the combustion on each of the burners
Job P Set the date and time on the system

System 20 –
Multiple boiler, System control, Common vent, 4-20 mA setpoint control, Outdoor reset

Job A Note on common venting
Job B Set up the names for each of the controllers
Job C Make one control the Lead/Lag master
Job D On each of the controllers that will act as a slave, disable the Lead/Lag Master
Job E Set up the Modbus control addressing to assign addresses for each of the controls
Job F Set up the addresses for the flap valves
Job G Disconnect the Touch Screens that will not be used
Job H Connect the Modbus wiring
Job I Set the parameters used by the Lead/Lag system
Job M Building automation or multiple boiler control 4-20 mA setpoint control
Job K Lead/Lag outdoor reset and warm weather shutdown
Job O Set up the combustion on each of the burners
Job P Set the date and time on the system

System 21 –
Multiple boiler, System control, Common vent, 4-20 mA modulation control

Job A Note on common venting
Job B Set up the names for each of the controllers
Job C Make one control the Lead/Lag master
Job D On each of the controllers that will act as a slave, disable the Lead/Lag Master
Job E Set up the Modbus control addressing to assign addresses for each of the controls
Job F Set up the addresses for the flap valves
Job G Disconnect the Touch Screens that will not be used
Job H Connect the Modbus wiring
Job I Set the parameters used by the Lead/Lag system
Job N Building automation or multiple boiler control 4-20 mA modulation control
Job O Set up the combustion on each of the burners
Job P Set the date and time on the system

System 22 –
Multiple boiler, System control, Common vent, 4-20 mA modulation control, Outdoor reset

Job A Note on common venting
Job B Set up the names for each of the controllers
Job C Make one control the Lead/Lag master
Job D On each of the controllers that will act as a slave, disable the Lead/Lag Master
Job E Set up the Modbus control addressing to assign addresses for each of the controls
Job F Set up the addresses for the flap valves
Job G Disconnect the Touch Screens that will not be used
Job H Connect the Modbus wiring
Job I Set the parameters used by the Lead/Lag system
Job N Building automation or multiple boiler control 4-20 mA modulation control
Job K Lead/Lag outdoor reset and warm weather shutdown
Job O Set up the combustion on each of the burners
Job P Set the date and time on the system

9.4 Installation Jobs

Note – To install your system, you will not need to do all of the installation jobs listed here. Please refer to Section 9.3 for a list of specific installation jobs necessary to install your system.

Job A – Note for Systems Using Common Venting

If multiple NeoTherm LC's share a single vent, the system must be engineered by a competent venting specialist. The design involves the selection of draft-inducing equipment, hardware and controls to properly balance flue gas pressures. Do not common vent NeoTherm LC's unless the vent system meets this requirement. NeoTherm LC's are never permitted to share a vent with Category I appliances.

Job B - Naming the Controllers

(This is an individual function – do this for each of the controls. Use the separate Touch Screen on each boiler.)

Each boiler includes two separate controls, as shown in Fig. 48. In a system with four boilers, there will be eight separate controls. See Fig. 49. The first job is to name each of these controllers.

1. We will start by entering a name for the first controller in the line – the Primary controller on Boiler 1. Start at the "Home" screen. Press the icon for the Primary control.

Fig. 52 – 'home' screen

2. The system will present the Status Summary screen for that controller. See Fig. 53.

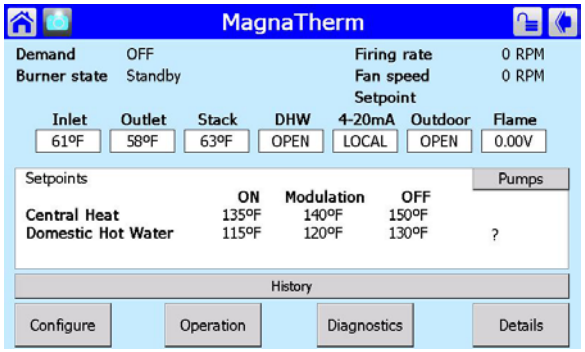

Fig. 53 – Status Summary Screen

3. Select the "Configure" button in the bottom left-hand corner of the display. Figure 54 shows the Configuration menu.

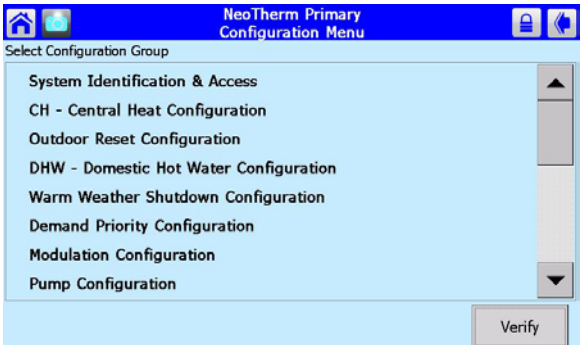

Fig. 54 – Configuration Menu

4. Select the line for System Identification and Access.

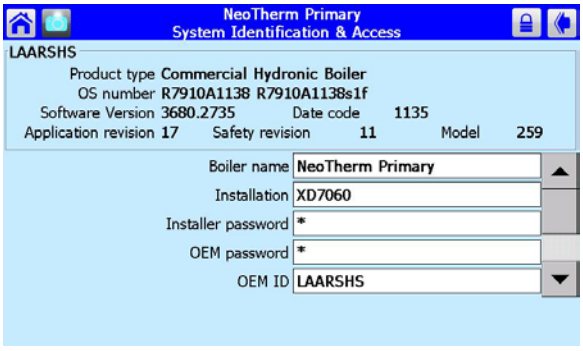

Fig. 55 - System Identification and Access

5. Go down to the line for Boiler Name to change the name of the control. In this example, we are working with the Primary control on Boiler 1, so the name here should be "Boiler 1 Primary." To change the entry, press on the line for Boiler Name. The system will

present the keyboard screen. Use the "BS" (BackSpace) key to erase the existing name. Enter the new name, then press OK.

6. Now you can rename the other control on Boiler 1 – the Secondary control. Press the Home button in the top left-hand corner to go back to the 'home' screen which shows the different controls (Fig. 52).
7. This time, press the icon for the Secondary control. Repeat steps 1 through 5. Change the name to "Boiler 1 Secondary."
8. Go to the Touch Screen for the next boiler in the system. Repeat steps 1 through 7 for each of the controllers on that boiler. Be sure the names you enter are correct – each name should indicate the Boiler number and whether the control will operate as the Primary or Secondary.
9. Repeat the process for any other boilers in the system.

Job C – Make One Control the Lead/Lag Master

(This is an individual function – do this once for the control that will act as the Lead/Lag Master. Use the Touch Screen on Boiler 1.)

The Lead/Lag control system uses one controller as the Lead/Lag Master. This controller supervises the operation of the other controllers, and they all operate together as part of the Lead/Lag system. There is only one Lead/Lag Master in the system. Usually, the controller used for this is the Primary controller on Boiler 1. (Other controls in the system can be set as the Lead/Lag Master, but we do not recommend this because it may complicate troubleshooting and technical support questions.)

The controller used as the Lead/Lag Master will also do a second job, operating as Slave 1 in the Lead/Lag system. A single controller performs both of these functions. When it arrives from the factory, the controller used for this should already be set up as a slave – we will check that in a moment. For now, we will just concentrate on enabling the Master function.

1. Start at the 'home' screen. See Fig. 56.

Fig. 56 – 'home' screen

2. Press the button for Lead Lag Master. Fig. 57 shows the screen that follows.

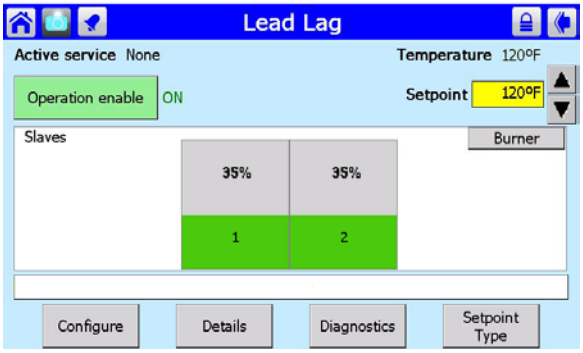

Fig. 57 – Lead/Lag Master Screen

3. Press the Configure button. The display will present the Lead/Lag Master Configuration Screen (Fig. 58).

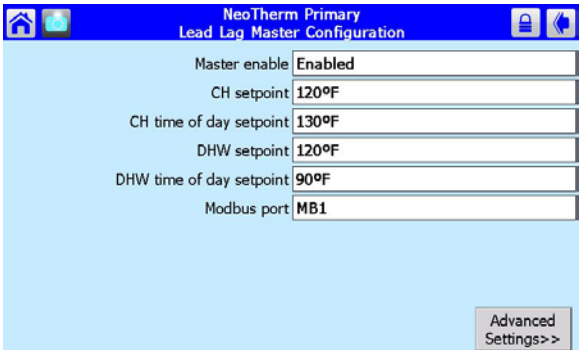

Fig. 58 – Lead/Lag Master Configuration

4. This screen shows the most important settings for the Lead/Lag system. The settings can be changed from this screen. Some of them will require passwords.

   We will enter all of the Lead/Lag control values in a moment. For now, just press on the line for Master Enable. Change the setting to Enable.

Job D - Disable the Lead/Lag Master Function on the Lead/Lag Slaves

(This is an individual function – do this for each of the controls, except the one used as the Lead/Lag Master. Use the separate Touch Screen on each boiler.)

At the beginning of this section, we described the Master and Slave arrangement used with the Lead/Lag system. In the previous section, we explained how to set up one controller as the Lead/Lag Master. As we said, the controller used as the Master (usually the Primary controller for Boiler 1) also serves as a Slave (usually Slave 1). A single controller performs both functions.

When the controllers arrive from the Laars factory, they will all be configured as slaves. Your job in this step is to disable the Lead/Lag Master function on each of the controls, except for the one control that will be used as the Lead/Lag Master – usually the Primary control on Boiler 1.

1. From the 'home' screen (Fig. 59), press the icon for the controller you want to work with. In this example, we will start with the Secondary controller for Boiler 1, and make sure this is not set up as a Master.

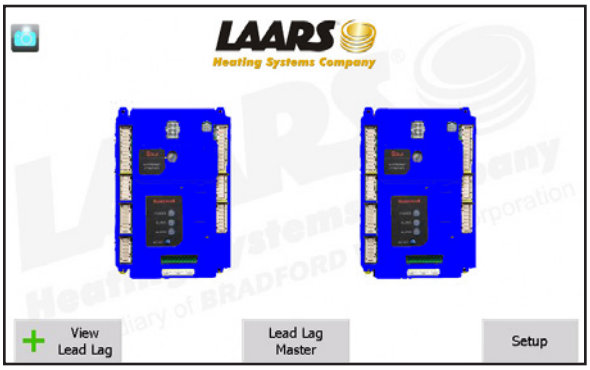

Fig. 59 – 'home' screen

2. The system will take you to the Status Summary screen.

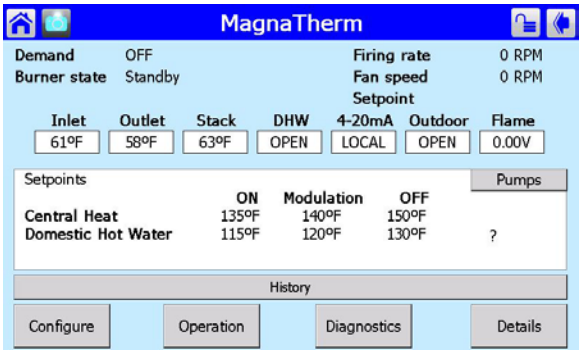

Fig. 60 – Status Summary Screen

3. To disable the Master function on this controller, press the Configure button. Figure 61 shows the Configuration screen.

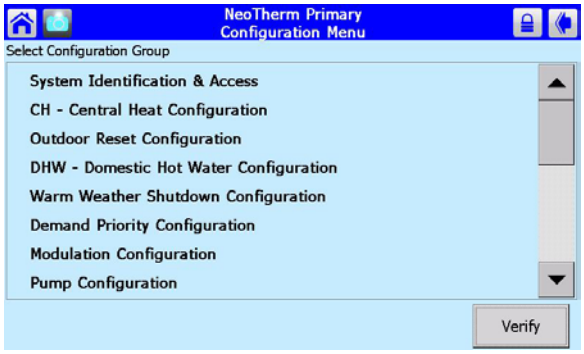

Fig. 61 – Configuration Screen

4. Scroll down through the list until you find the line for LL Master Configuration. See Fig. 62.

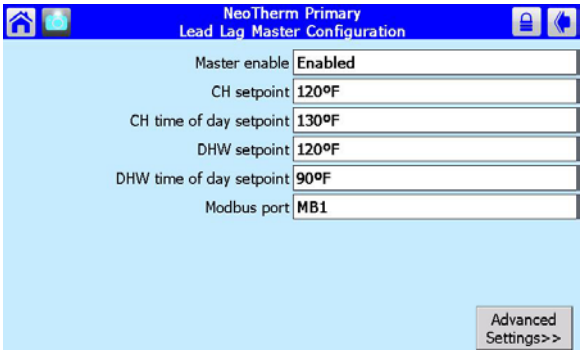

Fig. 62 – Lead/Lag Master Configuration

Press on the line for Master Enable. The system will go to a separate screen and ask you to login using a password. Enter the password (see Section 8.2), return to the Master Configuration screen, then press the line for Master Enable again. Change the entry to Disabled.

Don't change any of the other entries on this screen.

5. At this point, you have disabled the Master function on one of the controllers. You will need to repeat the process for each of the other controllers in the system (except the Primary Controller on Boiler 1).

   Go to the Touch Screen on the next boiler. Repeat steps 1 through 4 for the first controller on that boiler.

6. Repeat the steps listed above for each of the other controllers on the system. Disable the Master function on each of them.

Job E – Set Up the Modbus Control Addressing

(This is an individual function – do this for each of the controls Use the separate Touch Screen on each boiler.)

Do this on any system with multiple boilers.

Note – Do not connect the Modbus wiring yet. The controls must be set up and addressed correctly before the wiring is complete. If the wiring is attached before the control Modbus addresses are changed, there will be multiple controls with the same address, and the system will not work.

1. When the system is operating under the control of the Lead/Lag system, the Lead/Lag Master needs a way to identify each controller in each of the boilers. On a system with four boilers there will be eight separate controllers. You will need to give each of these controllers a unique Modbus address. (Notice that this is different from the name of the controller. We set the controller names in a previous step.)
2. Power up all of the boilers in the system. It will take a minute for each Touch Screen to "synchronize" with its two controllers.
3. Start at the 'home' screen on the first boiler. See Fig. 63.

Fig. 63 – 'home' screen

4. Press the Setup button in the lower right-hand corner to go to the Setup screen.

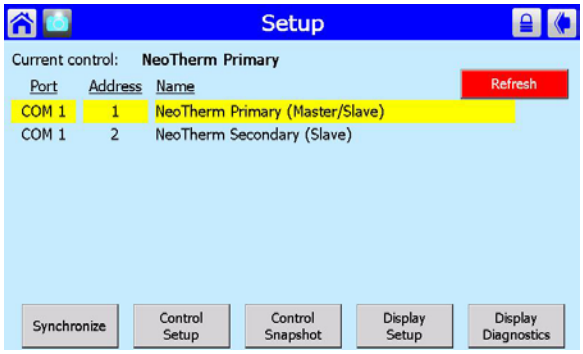

Fig. 64 – Setup Screen

5. Press the Control Setup button. Figure 65 shows the Control Setup screen.

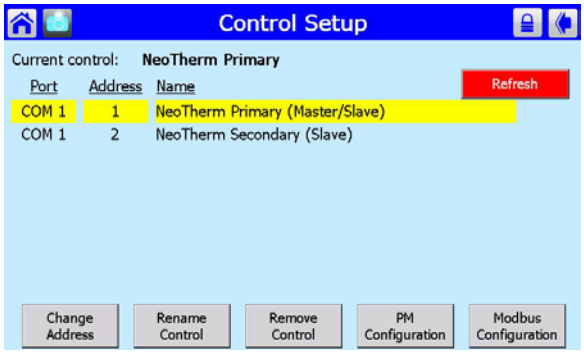

Fig. 65 – Control Setup Screen

6. The first number on each line (01, 02, etc.) is the Modbus control address. Let's set up the Modbus address for the first controller in the line - the Primary controller on Boiler 1. Press the top line – NeoTherm LC Primary.
7. Press the Change Address button. You need to know the installer-level password to change the address, so the system will ask you to log in. (For more information on the passwords and logging in, see the section on "Using the Touchscreen.") Press the padlock symbol in the upper right-hand corner of the screen, then type in the installer-level password and press the OK button.
8. Press the Change Address button again. The system will present a screen that lets you change the address.

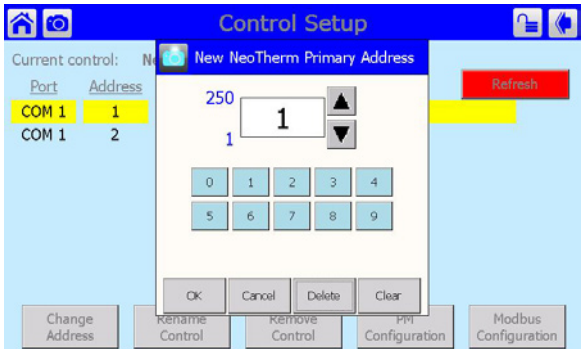

Fig. 66 – Changing Modbus Address

9. Table 13 shows how the Modbus control addressing should be set up. The system is simple, but it is important to only use the correct address listed in the table. Do not use any other address than the one listed in the table for the control you are addressing. In this example, the correct address for the

Primary Control on Boiler 1 is "1." If this is not already set to "1", enter the correct number, then press OK.

⚠ WARNING

If the addresses are not assigned properly, the system could fail to operate correctly, or it might operate in an unsafe manner. This could lead to property damage, personal injury or death.

10. Now you can use the same process to set the address for the Secondary control for Boiler 1. On the Control Setup screen (Fig. 65), press the second line – NeoTherm LC Secondary. Change the address to the correct address taken from Table 3. In this case, the correct address would be "2."
11. Go to the Touch Screen for Boiler 2. Repeat the process to change the addresses for Boiler 2 Primary (address = 3) and Boiler 2 Secondary (address = 4).
12. Repeat steps 3 - 10 for each of the other controllers connected to the system.

Job F - Set the Flap Valve IDs

(These are individual functions. Make the flap valve assignment on each of the controllers. Use the Touch Screen on each of the boilers.)

Do this on any system with multiple boilers.

Each boiler includes two burners, and each burner has a flap valve. See Fig. 67.

A flap valve acts like a one-way valve or check valve. If one burner in a boiler is operating, and the other is not, one of the flap valves will close to prevent exhaust air from moving backwards through the burner that is not operating.

Before the Lead/Lag Master controller will allow the system to operate, it must be able to determine whether each of these flap valves is open or closed. If the controller cannot find a signal from one of the flap valves, the control system will act to prevent backflow by energizing the blower of the control with the bad flap valve. (The positive pressure from the blower will prevent the exhaust air from moving back through the burner.) If this cannot be done, the Lead/Lag Master controller will not allow the whole system to run. For this reason, it is important that all of the flap valves be identified correctly.

Each controller in the system needs to know how many controllers are included in the whole system. You will need to enter this information in each of the controllers separately.

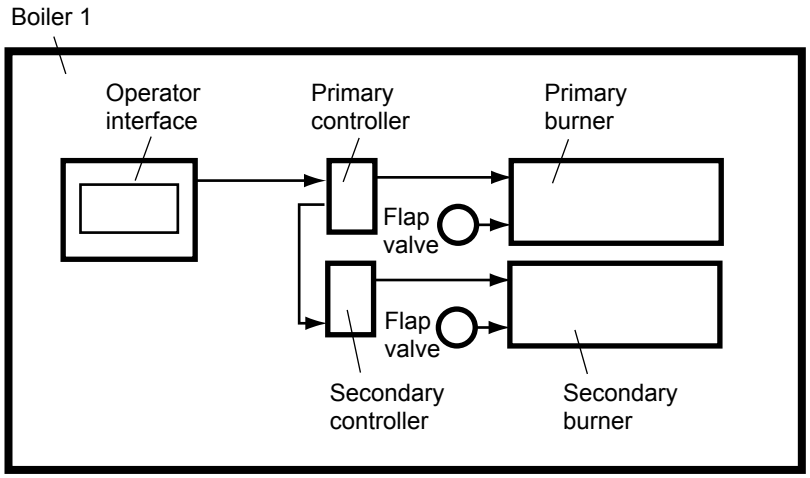

Fig. 67 - Flap Valve Arrangement

Table 13 – Modbus Control Addressing

	Boiler 1	Boiler 2	Boiler 3	Boiler 4
Primary control	1	3	5	7
Secondary control	2	4	6	8

⚠ WARNING

If the flap valve identifications are not configured correctly, this could cause the equipment to malfunction. This could lead to personal injury or death, and could damage the equipment. If the configuration is not correct, the control system will present an error – "HOLD 119 – Control Interaction Fault" on the display, and will prevent the boiler(s) from operating.

1. Let's start by setting the Flap Valve ID for the Primary control for Boiler 1. To do this, start at the 'home' screen (Fig. 68). (To reach the 'home' screen, press the Home icon in the upper left corner of any screen.)

Fig. 68 – 'home' screen

2. Press the icon for the controller you want to work with. The system will take you to the Status Summary screen for that controller.

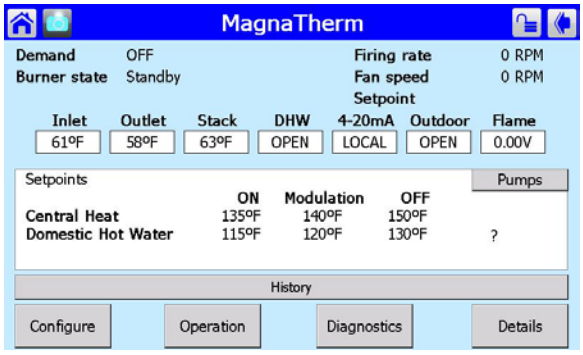

Fig. 69 – Status Summary Screen

3. Press the Configure button. Figure 70 shows the Configuration screen.

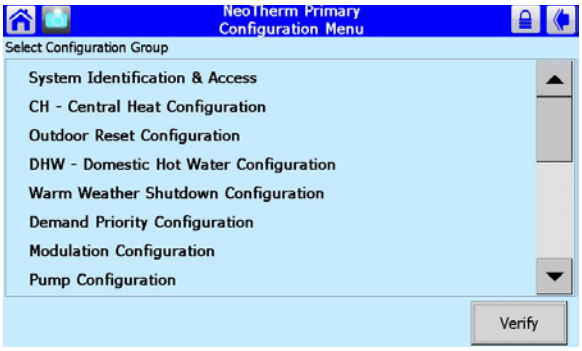

Fig. 70 – Configuration Screen

4. Scroll through the listing on the Configure menu to Flap Valve Configuration, and select that line. See Fig. 71.

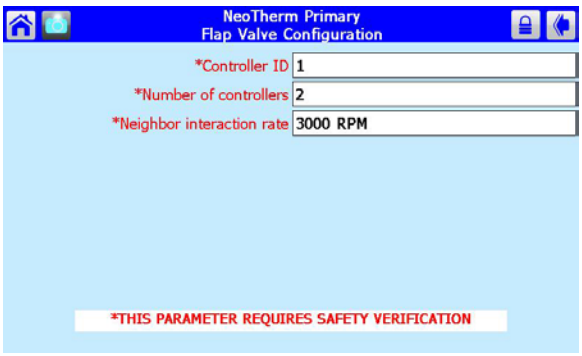

Fig. 71 – Flap Valve Configuration Screen

Two of the items on this screen can be changed:

Controller ID -

This is the ID number of the flap valve associated with this controller. (We will set the ID number for the other controller in this boiler in a moment.)

Number of controllers -

This is the total number of controllers in the whole system. (For example, in a system with four boilers, there will be eight controllers.) See Table 14.

You need to set both of these values on the Flap Valve Configuration screen for ***each*** controller in the system.

Table 14 – Number of Controls

Number of boilers	Number of controls
2	4
3	6
4	8

For example, if your system has three boilers, there would be a total of six controllers (two for each boiler), so you would enter "6" for Number of Controls.

5. Press the line for Controller ID. Because you are changing a parameter that is related to safety, the system will present a warning that looks like this:

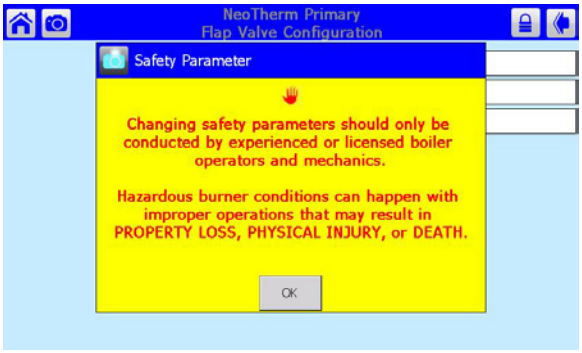

Fig. 72 – Parameter Safety Warning

Press OK to continue. The system will ask you to login before you make a change.

Note that any changes you make will apply only to one controller – the controller you have already selected. If you want the same change to apply to other controllers, you must change each of them separately.

Once you change one of these safety-related parameters, you must finish the verification process, or the control system ***will not let the boiler operate***. Each control in a boiler must be verified separately.

6. Press again on the line for Controller ID. Table 15 shows how the Primary and Secondary controls should be numbered for each of the boilers.

In this example, we are still working with the Primary control for Boiler 1. From the table, you can see that this control should have a flap valve ID of "1." Enter the correct ID from Table 5 in this field.

⚠ WARNING

If the controller cannot find a signal from one of the flap valves, the control system will act to prevent backflow by energizing the blower of the control with the bad flap valve. If this cannot be done the control will not allow the whole system to run. For this reason, it is important that all of the flap valves be identified correctly.

7. Set the address for the other controller on this boiler in the same way.
8. At this point, you have set the flap valve ID's for both controllers on this boiler. Before you leave, you must finish the verification process, or the control system will not let the boiler operate.

   Press the Back arrow to return to the Configuration screen.

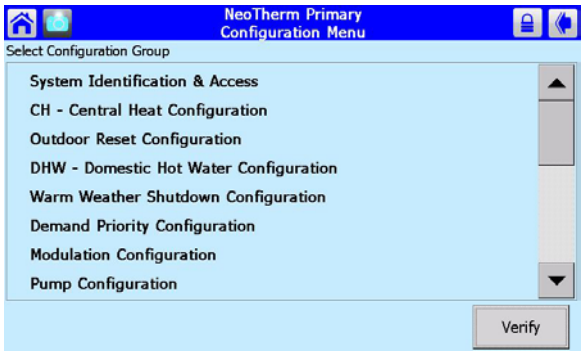

Fig. 73 – Configuration Screen

9. In a moment, you will need to reset the controller by pressing a button on the front of the unit. See Fig. 74. The controllers for the two boilers are mounted behind the door on the front of the unit.

Table 15 – Flap Valve Controller ID Addressing

	Boiler 1	Boiler 2	Boiler 3	Boiler 4
Primary control	1	3	5	7
Secondary control	2	4	6	8

Fig. 74 – Reset Button on Controller

The control system allows 30 seconds to press the reset button. Do not press the Reset button yet! You will need to do this in a moment. At this point, we just want to alert you to something: In order to be able to reach the controller within 30 seconds, it will be helpful to open the door and slide out the control panel first.

When you are ready, press the Verify button on the Configuration screen.

10. To begin the verification, login to the system and press Begin.

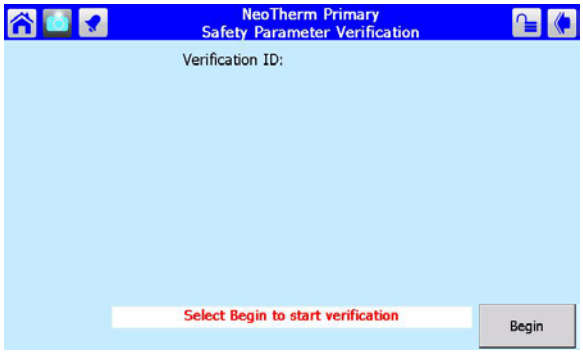

Fig. 75 – Edit Safety Data

11. The system will present a listing of a group which includes the parameter you changed (the flap valve ID). See Fig. 76.

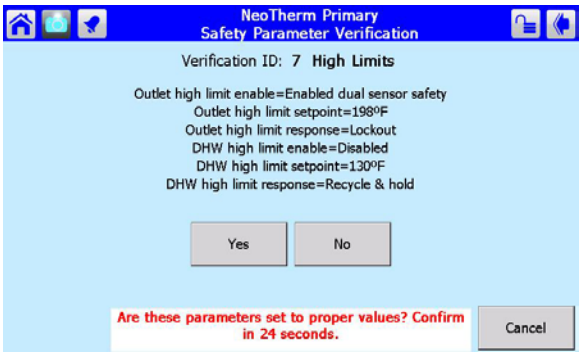

Fig. 76 – Safety Parameter Confirmation

Check the list carefully. Press Yes if all of the parameters in the group have been entered correctly.

12. The system will tell you to reset the control system.

Fig. 77 – Safety Parameter Reset

You must press the Reset button within 30 seconds, or the verification will be cancelled.

13. At this point, you have set the flap valve address for one of the controllers in the boiler. The next job is to set the flap valve identification for the other control on this boiler. (In this example, this would be the Secondary control on Boiler 1). Press the Home button in the upper left-hand corner of the display.
14. Press the icon for the Secondary control. Repeat steps 3 through 12 for the Secondary control for Boiler 1. (From Table 15, you can see that the address for this control should be "2.")
15. At this point, you have set the flap valve ID's for both controllers on one of the boilers. Now you must repeat the process for all of the controllers on each of the other boilers.

Job G – Disconnect Unused Touch Screens

Once a Lead/Lag system is set up and operating, the monitoring functions will all be handled from one Touch Screen – the one connected to the controller operating as the Lead/Lag Master. If the extra displays remain connected to the Lead/Lag system, this will slow down the communications through the system. (Each display would be considered a leader on the Lead/Lag system.) To eliminate this slowdown, disconnect the power from all of the displays on the network except the display that is connected to the controller operating as the Lead/Lag Master.

Here is the procedure for disconnecting power to one of the displays:

1. Turn off the power to the boiler which includes the display you want to disconnect.
2. Open the front door to get access to the electronics panel.
3. Locate terminal block 10 (TB10). See Fig. 78. Remove the jumper connecting pins 1 and 2 on TB10.

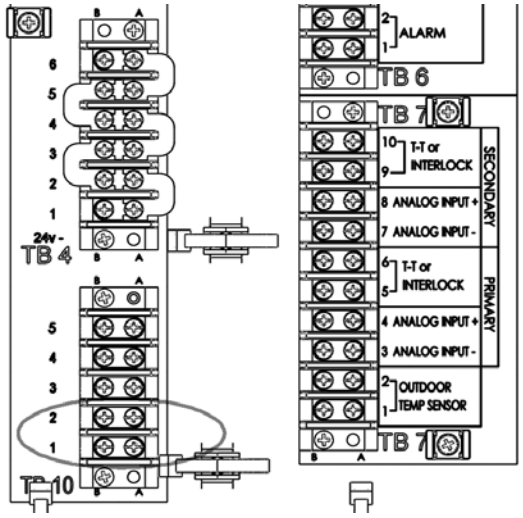

Fig. 78 – Disconnecting an Unused Touch Screen

4. Close the front door and turn on power to the boiler.

Job H - Connect the Modbus Wiring

(This is an individual function – do this on each of the controls.)

In an installation with multiple boilers, the controllers are arranged in a "daisy chain." The wiring from the Secondary controller on one boiler (TB9 - pins 7 through 12) to the Primary controller on the next boiler (TB9 - pins 1 through 6). See Fig. 79. Use 22 AWG or thicker shielded twisted pair wire with drain. Two twisted pairs or three conductors are needed.

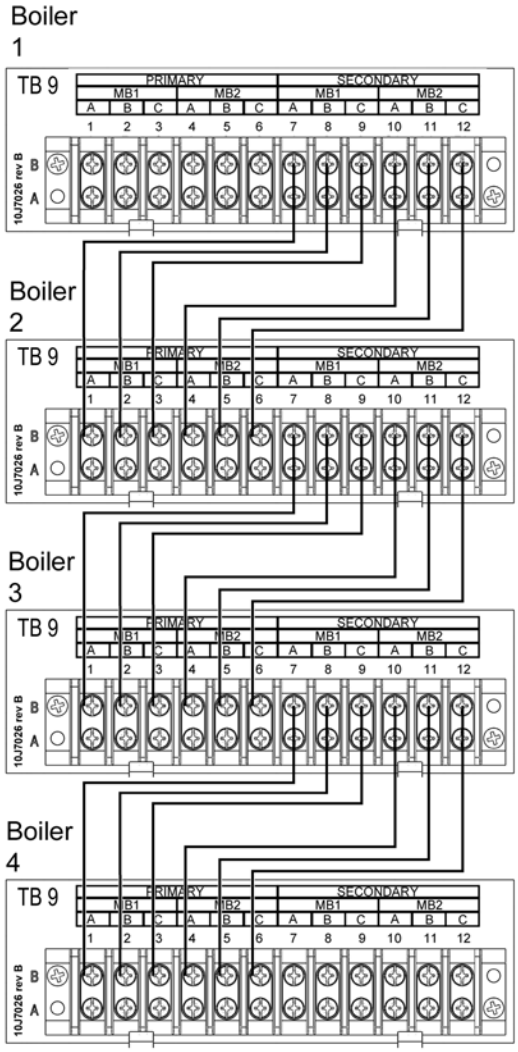

Fig. 79 - Modbus Connections

Note – The Modbus wiring should be done last. The controllers must be set up and addressed correctly before the wiring is complete. If the wiring is attached before the Modbus addresses for the controllers are set up, there might be multiple controls with the same address, and the system will not work.

1. Turn off the power to all of the boilers to which you will be making connections. On each boiler, open the front door to gain access to the electronics panel. Locate terminal block 9 (TB9) on each panel.
2. Figure 79 shows how to make the connections. The following table lists the connections from Boiler 1 to Boiler 2.

Boiler 1 (Lead/Lag Master) Secondary		Boiler 2 Primary
TB9, pin 7	connect to	TB9, pin 1
TB9, pin 8	connect to	TB9, pin 2
TB9, pin 9	connect to	TB9, pin 3
TB9, pin 10	connect to	TB9, pin 4
TB9, pin 11	connect to	TB9, pin 5
TB9, pin 12	connect to	TB9, pin 6

3. Repeat the process for Boiler 2 and 3, and Boiler 3 and 4. The connections to the other boilers follow the pattern we just described. Use Fig. 79 as your reference.
4. Connect the drain wires from all of the wire assemblies together and ground the drain wire on one end of the assembly only.
5. Turn on the power to all of the boilers when you are finished.

Job I – Set the Parameters Used by the Lead/Lag System

(This is a Lead/Lag function – do this once for the whole Lead/Lag system. Use the controller set up as the Lead/Lag Master – usually the Primary controller on Boiler 1.)

We have already explained how the Lead/Lag Master controls the operation of the Lead/Lag system. Your job at this point is to enter the control values that the Lead/Lag system will use.

Fig. 80 - 'home' screen

1. From the 'home' screen (Fig. 80), press the Lead Lag Master button. Figure 81 shows the screen that follows.

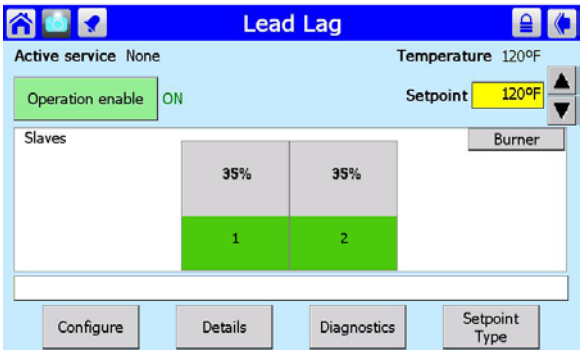

Fig. 81 – Lead/Lag Master Screen

2. Press the Configure button. The display will present the Lead/Lag Master Configuration Screen (Fig. 82).

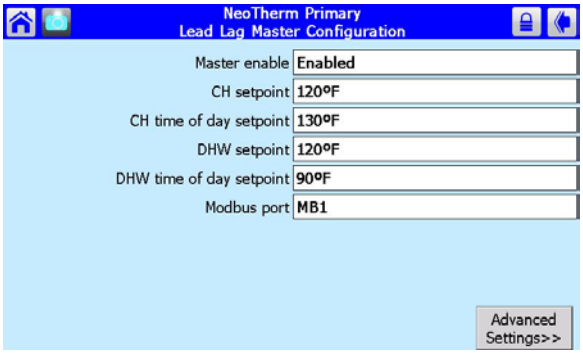

Fig. 82 – Lead/Lag Master Configuration

3. This screen shows the most important settings for the Lead/Lag system. The settings can be changed from this screen. Some of them will require passwords.

   Here are the settings on this screen:

   Master enable -

   Enabled = Lead/Lag system enabled

   CH setpoint -

   Setpoint for LL Central Heating

   CH time of day setpoint -

   Separate Time-of-Day Setpoint for Central Heating (See the material on "About the 'Time of Day' Function at the end of this section)

   DHW setpoint -

   Setpoint for Domestic Hot Water

DHW time of day setpoint -

Separate Time-of-Day Setpoint for Domestic Hot Water (See the material on "About the 'Time of Day' Function at the end of this section)

Modbus port -

Always use MB1

4. To see the other settings related to the Lead/Lag functions, press the button for Advanced Settings. This leads to a "ring" of related screens, and you can scroll through the list by pressing one of the left- or right-arrow symbols. The screens in this ring are:

Modulation

Central Heat

Domestic Hot Water

Frost Proection

Outdoor Reset

Warm Weather Shutdown

Algorithms

Rate Allocation

Add Stage

Drop Stage

5. Press the left-arrow or right-arrow until you see the Modulation screen (Fig. 83).

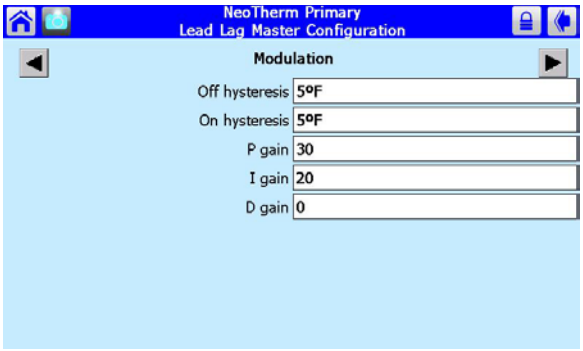

Fig. 83 – Modulation

Three of the items on this screen can be changed:

Off hysteresis -

The system will not shut off the burners until the System sensor reaches the CH Setpoint plus an additional "hysteresis" value.

On hysteresis -

The system will not fire the burners until the System sensor reaches the LL CH Setpoint minus an additional "hysteresis" value.

P, I, D Gain -

These control the "damping" used by the temperature control. The three control values are P (proportional), I (integral) and D (derivative). If you understand how these variables affect the function of the unit, you can change them to adjust for unusual operating conditions. The default settings for the Lead/Lag configuration are: P = 30, I = 20, and D = 0.

6. Press the left-arrow or right-arrow until you see the Central Heat screen (Fig. 84).

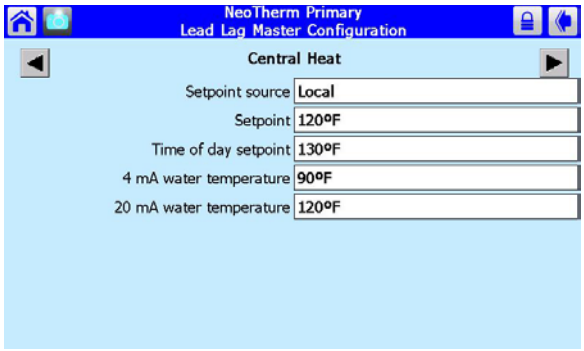

Fig. 84 – Central Heat

Setpoint source -

This sets the source of the System sensor input used to control the system. The options here are Local and 4-20 mA. (For instructions on setting up for a 4-20 mA input, see Job #5 in the section on "Installation Options.")

Setpoint -

This is the same as the LL CH Setpoint on the Lead/Lag Master Configuration screen (Fig. 82).

Time of day setpoint -

This is the same as the LL CH Time-Of-Day Setpoint on the Lead/Lag Master Configuration screen (Fig. 82). (See the material on "About the 'Time of Day' Function at the end of this section)

4 mA water temperature -

If a 4 – 20 mA input is used to adjust the setpoint, this entry sets the low limit of the control range. (In the example shown here, an input of 4 mA would result in a setpoint of 90°F.)

20 mA water temperature -

If a 4 – 20 mA input is used to adjust the setpoint, this entry sets the high limit of the control range. (In the example shown here, an input of 20 mA would result in a setpoint of 120°F.)

7. Press the left-arrow or right-arrow until you see the Domestic Hot Water screen (Fig. 85).

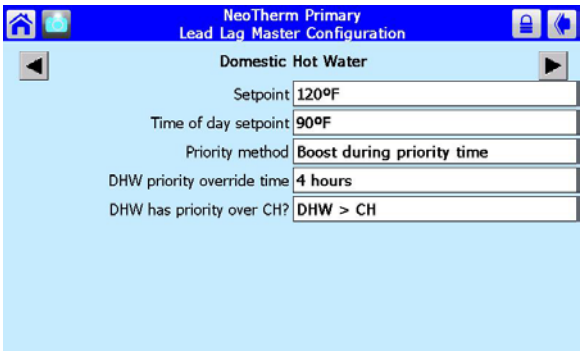

Fig. 85 – Domestic Hot Water

The arrangement for Domestic Hot Water can be set up in several ways. For details, see the section on "Lead/Lag Domestic Hot Water."

DHW Setpoint -

This is the same as the DHW Setpoint on the Lead/Lag Master Configuration screen.

DHW Time of day setpoint -

This is the same as the DHW Time-Of-Day Setpoint on the Lead/Lag Master Configuration screen. (See the material on "About the 'Time of Day' Function at the end of this section.)

DHW Priority method -

This determines the way the system gives priority to the DHW demand (if DHW is given priority on the bottom line of the screen.)

DHW priority override time -

If Domestic Hot Water has priority (see the next line below), this sets how long the DHW loop will have priority before returning to control by the Lead/Lag Central Heat setpoint.

DHW has priority over CH? -

Choose Central Heating priority or Domestic Hot Water priority.

8. Press the left-arrow or right-arrow until you see the Outdoor Reset screen (Fig. 86).

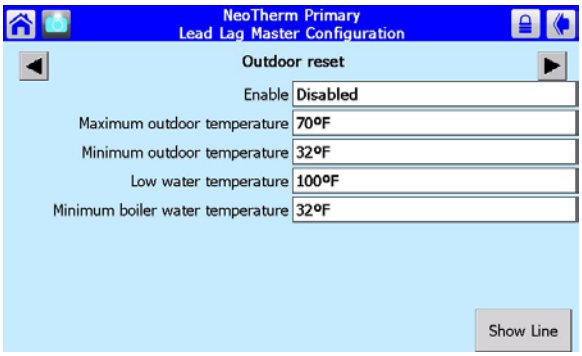

Fig. 86 – Outdoor Reset

"Outdoor Reset" allows the system to adjust the Central Heat setpoint to compensate for changes in the outdoor temperature. This allows the whole system to run more efficiently. For details, see the section on "About Outdoor Reset."

Enable -

Enable = Outdoor Reset feature turned on

Max. outdoor temp. -

If the outdoor temperature reaches this value or above, the system will use the Low Water Temp value as the setpoint. In the example shown in Fig. 86, the Max. Outdoor Temp. is set to 70°F. If the outdoor temperature is 70°F or above, the system will use 100°F (the Low Water Temp.) as the setpoint.

Min. outdoor temp. -

If the outdoor temperature reaches this value or below, the system will not compensate for the outdoor temperature. In the example shown in Fig. 86, the Min. Outdoor Temp. is set to 32°F. If the outdoor temperature reaches 32°F or below, the system will use the normal Lead/Lag System setpoint (120°F in this example).

Low water temp. -

If the outdoor temperature reaches the Max. Outdoor Temp. or higher, the system will use the Low Water Temp value as the new setpoint. In the example shown in Fig. 86, the Max. Outdoor Temp. is set to 70°F. If the outdoor temperature reaches 70°F or above, the system will use the Low Water Temp. value (100°F) as the setpoint.

Min. boiler water temperature -

If a value is entered here, the temperature in the boiler will never be allowed to drop below this temperature. This will protect the boiler against possible damage due to expansion of ice inside the unit.

9. The Show Line button at the bottom of the screen displays a curve which shows how the system will behave at different outdoor temperatures. See Fig. 87. (This screen is also explained in the section on "About Outdoor Reset.")

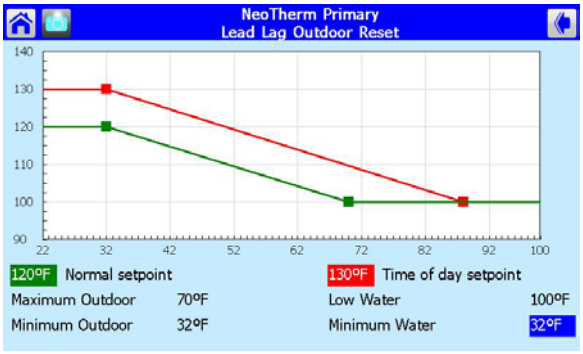

Fig. 87 – Outdoor Reset Display

10. From the Outdoor Reset screen, press the left-arrow or right-arrow until you see the Warm Weather Shutdown screen (Fig. 88).

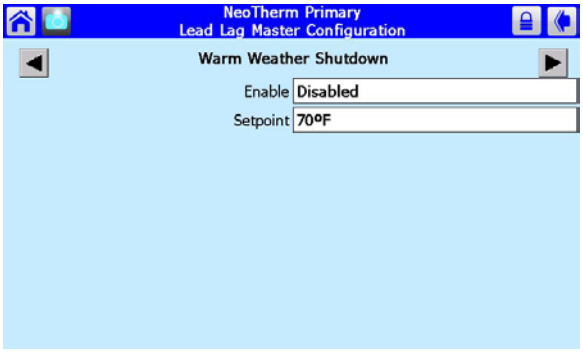

Fig. 88 – Warm Weather Shutdown

When enabled, the Warm Weather Shutdown feature will turn off the Central Heating functions when the outdoor temperature exceeds the setpoint. This prevents the system from running when there is no need for heat.

Enable -

These options determine how quickly the system shuts down after the outdoor temperature rises above the setpoint. The options are Shutdown immediately/ After demand ends/ Disabled.

Setpoint -

If the outdoor temperature is higher than this, the system will shut off the Lead/Lag Central Heating functions.

11. Press the left-arrow or right-arrow until you see the Rate Allocation screen (Fig. 89).

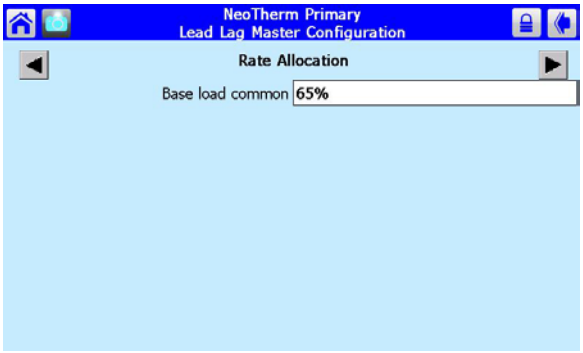

Fig. 89 – Rate Allocation

As the load on the system increases, the first boiler in the Lead/Lag chain will increase the fan speed until it reaches a certain percentage of the total output (the "base load"). At that point, the controller will start the second boiler in the lead/lag chain. See the explanation at the beginning of this section and Fig. 50.

Base Load Common -

As the demand increases, this sets the point at which the controller starts another burner in the Lead/Lag chain.

To prevent short-cycling, the base load setting should be set at the values shown in Table 16, or set to higher values.

Table 16 – Base Load Settings

Number of boilers Installed	Base load min.
1	65%
2	50%
3	30%
4	30%

About the "Time of Day" Function

If the "time of day" function is enabled, the control system can be set to maintain different temperatures for central heat and domestic hot water (other than the normal setpoints) in the system at certain times of the day. Normally this function is used to switch to lower temperatures at night, when the central heating or domestic hot water demand is reduced. When the controller acting as the Lead/Lag Master receives a time of day input, the controller shifts to the special setpoints entered for central heat and domestic hot water.

The input for the Time of Day function must be wired to pins 2 and 3 on connector J10.

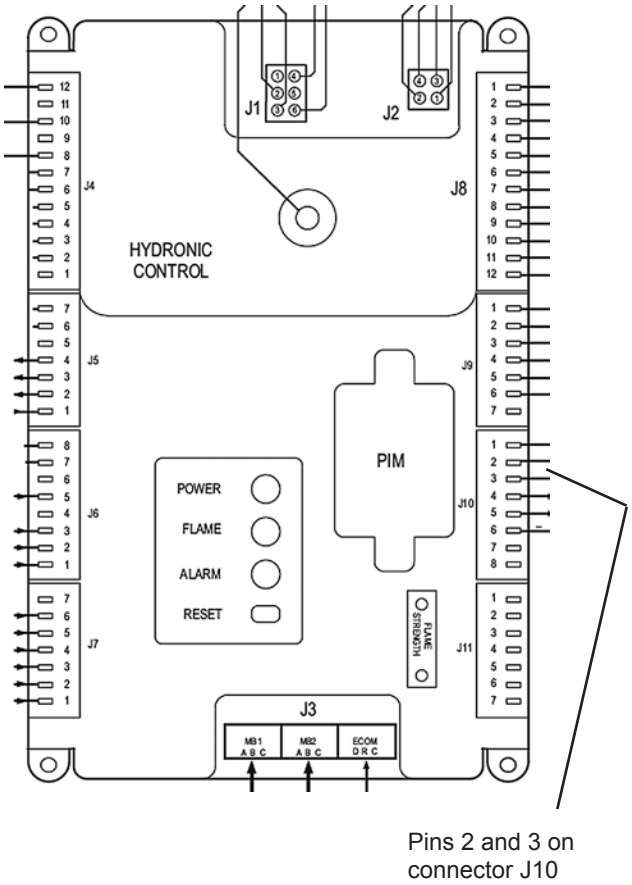

Fig. 90 – Connections for "Time of Day" Function

Job J - Install the System Sensor and Adjust the Setpoint

(This is a Lead/Lag function – do this once for the whole Lead/Lag system. Make the connections to the controller set up as the Lead/Lag Master – usually the Primary controller on Boiler 1.)

1. Install the System sensor at the location shown in Fig. 91. Connect the System sensor to the System terminals on the controller acting as the Lead/Lag Master (usually the Primary controller on Boiler 1.) Use terminals 3 and 4 on TB6.
2. Adjust the Lead/Lag Central Heat Setpoint to the desired temperature to be used by the system.

   How to get there – Adjust CH Setpoint

   Home Page <Press View Lead Lag button> Lead Lag Screen <Press Lead Lag Master button> Lead Lag Screen <Press Configure button> Lead Lag Master Configuration Screen

   Line 2 = CH Setpoint

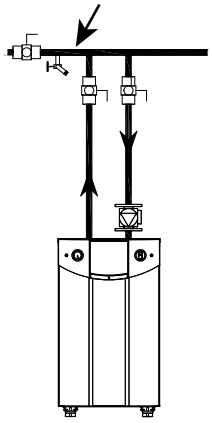

Fig. 91 – Mounting Location for System Sensor

Job K - Set the Lead Lag Outdoor Reset and Warm Weather Shutdown

(This is a Lead/Lag function – do this once for the whole Lead/Lag system. Use the controller set up as the Lead/Lag Master – usually the Primary controller on Boiler 1.)

For more information on the outdoor reset function, see the explanation which follows.

1. Install the outdoor air temperature sensor and make the connections to the outdoor air sensor terminals on the controller acting as the Lead/Lag Master (usually the Primary controller on Boiler 1.) Use terminals 1 and 2 on TB7.

2. Set the outdoor reset and warm weather shutdown parameters as desired.

How to get there – Outdoor Reset Screen and Warm Weather Shutdown Screen

Home Page <Press View Lead/ Lag button> Lead/ Lag Screen <Press Lead/ Lag Master button> Lead/ Lag Screen <Press Configure button> Lead/ Lag Master Configuration Screen <Press Advanced Settings button>

Select the Outdoor Reset Screen or the Warm Weather Shutdown Screen

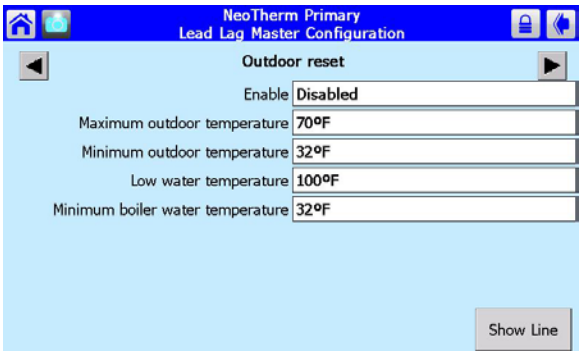

Fig. 92 – Outdoor Reset

For a detailed explanation of the Outdoor Reset function, see the section titled "About Outdoor Reset" which follows.

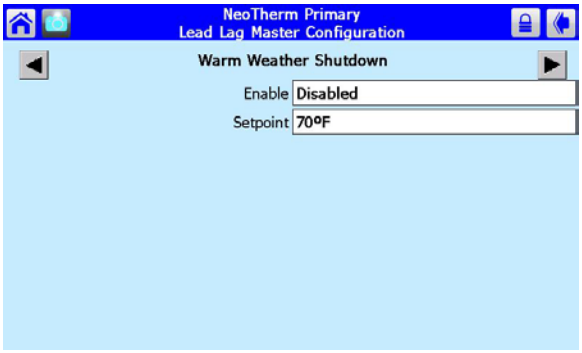

Fig. 93 – Warm Weather Shutdown

When enabled, the Warm Weather Shutdown feature will turn off the Central Heating functions when the outdoor temperature exceeds the setpoint. This prevents the system from running when there is no need for heat.

Enable -

These options determine how quickly the system shuts down after the outdoor temperature rises above the setpoint. The options are Shutdown immediately/ After demand ends/ Disabled.

Setpoint -

If the outdoor temperature is higher than this, the system will shut off the Lead/Lag Central Heating functions.

About Outdoor Reset

The Outdoor Reset feature calculates a correction for the Lead/Lag setpoint depending on the outdoor temperature. This allows the system to adjust for changes in the outdoor temperature and run more efficiently.

The Show Line button at the bottom of the Outdoor Reset screen displays a curve which shows how the system will behave at different outdoor temperatures. See Fig. 94.

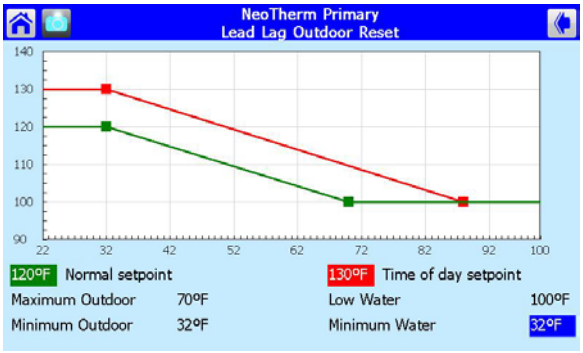

Fig. 94 – Show Line Screen

The display shown above show the action of the system with one possible group of settings. The green line shows the setpoint used by the system.

- Without Outdoor Reset, this would be a constant 120°F (or whatever value you chose), regardless of the outdoor temperature. The green line in the graph would run straight across the display.
- However, with the Outdoor Reset feature turned on, the system will adjust for changes in the outdoor temperature. Let's take a detailed look at behavior of the setpoint, shown by the green line in the display. For cold outdoor temperatures (below 32°F), the setpoint remains unchanged (120°F). As the temperature begins to rise above 32°F, the Outdoor Reset function causes the setpoint to be lowered. At these warmer temperatures, the heating load on the system is not as great, so the system does not have to reach as high a temperature to handle the load. As you can see from the display, at an outdoor temperature of about 70°F, the system stops adjusting the setpoint. Above 70°F, the setpoint is constant at 100°F.

When Outdoor Reset is enabled, and the outdoor temperature falls between the maximum and minimum outdoor temperatures (70° and 32° in the example above), the setpoint will be adjusted down by about 1° for every 2° increase in the outdoor temperature. For example, if the outdoor temperature rises by 10°, the Outdoor Reset function will adjust the setpoint down by about 5°. (This ratio between outdoor temperature and water temperature is adjustable.)

When you set up the Outdoor Reset feature, you can set the "turning points" on the adjusted setpoint curve. If you go back to Fig. 91, the Outdoor Reset screen, you see that the system records these values:

Enable -

Enable = Outdoor Reset feature turned on

Max. outdoor temp. -

If the outdoor temperature reaches this value or above, the system will use the Low Water Temp value as the setpoint. In the example shown in Fig. 91, the Max. Outdoor Temp. is set to 70°F. If the outdoor temperature is 70°F or above, the system will use 100°F (the Low Water Temp.) as the setpoint.

Min. outdoor temp. -

If the outdoor temperature reaches this value or below, the system will not compensate for the outdoor temperature. In the example shown in Fig. 91, the Min. Outdoor Temp. is set to 32°F. If the outdoor temperature reaches 32°F or below, the system will use the normal Lead/Lag System setpoint (120°F in this example).

Low water temp. -

If the outdoor temperature reaches the Max. Outdoor Temp. or higher, the system will use the Low Water Temp value as the new setpoint. In the example shown in Fig. 91, the Max. Outdoor Temp. is set to 70°F. If the outdoor temperature reaches 70°F or above, the system will use the Low Water Temp. value (100°F) as the setpoint.

There is one other part of this system, and it is located on a different screen:

LL CH setpoint -

On a system set up for Outdoor Reset, this will be the maximum water temperature setting. This is located on the main Lead/ Lag Configuration screen.

How to get there – Lead/Lag Master Configuration Screen

Home Page <Press Lead/ Lag Master button> Lead/ Lag Screen <Press Configure button> Lead/ Lag Master Configuration Screen

Job L - Building Automation or Multiple Boiler Control Thermostat Demand

(This is a Lead/Lag function – do this once for the whole Lead/ Lag system. Make the connections to the controller set up as the Lead/Lag Master – usually the Primary controller on Boiler 1.)

1. Supply the controller which is acting as the Lead/Lag Master (usually the Primary controller on Boiler 1) with a thermostat closure from the Building Automation System or multiple boiler control. Connect to terminals 5 and 6 on TB7.
2. Adjust the Lead Lag Central Heat setpoint.

How to get there – Lead/ Lag Central Heat Setpoint

Home Page <Press Lead/ Lag Master button> Lead/ Lag Screen <Press Configure button> Lead/ Lag Master Configuration Screen

Line 2 = CH Setpoint

Note - Laars offers "gateways" to allow connections to BACnet, LON, and other communications protocols. See Section 9.6.

Job M - Building Automation or Multiple Boiler 4-20 mA Setpoint Control

(This is a Lead/Lag function – do this once for the whole Lead/ Lag system.)

In this type of installation, the CH Setpoint is changed or modulated by a source outside of the boiler. The low limit of the 4-20 mA signal (4 mA) sets the low limit of the setpoint, and the high limit of the 4-20 mA signal (20 mA) sets the high limit of the setpoint.

1. Supply the controller which is acting as the Lead/Lag Master (usually the Primary controller on Boiler 1) with the 4-20 mA input from the Building Automation System or multiple boiler control. Connect to terminals 3 and 4 on TB7.
2. On the Lead/Lag Master settings, change the setpoint source to 4-20 mA.

How to get there – Lead/ Lag Setpoint Control

Home Page <Press Lead/ Lag Master button> Lead/ Lag Screen <Press Configure button> Lead Lag Master Configuration Screen <Press Advanced Settings button> <Press Left- or right-arrow button> Central Heat

Setpoint Source = 4-20 mA

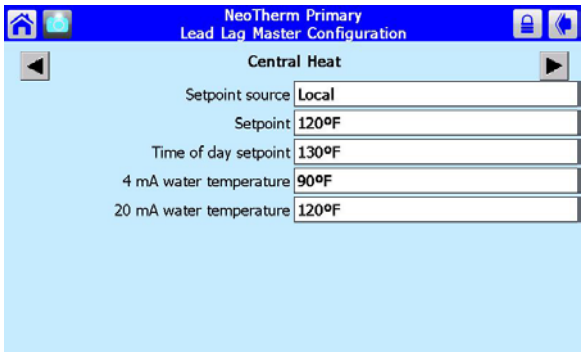

Fig. 95 – Lead Lag Central Heat Configuration

3. Change the 4 mA water temperature to match the lowest water temperature setting on the Building Automation System or multiple boiler control.
4. Change the 20mA water temperature to match the highest water temperature setting on the Building Automation System or Multiple boiler control.

Note - Laars offers "gateways" to allow connections to BACnet, LON, and other communications protocols. See Section 9.6.

Job N - Building Automation or Multiple Boiler 4-20 mA Modulation Control

(This is an individual function – do this on each of the controls.)

In this type of installation, the fan speed of each boiler is changed or modulated by a source outside of the boiler. All active burners must operate at the same modulation rate while operating. The system will not operate correctly if some of the burners are being asked to operate at full rate while other burners are operating at minimum rates.

Note - The system can also operate using 0 - 10V dc using a converter (Laars part number CA006100.)

1. On each controller in the system, check terminals 5 and 6 on TB7 to ensure that the System sensor is not connected. (For this type of operation, the Lead/Lag system is disabled.)
2. Connect the 4-20 mA input to each controller in the system.
   - On the Primary controller in each boiler, connect to terminals 3 and 4 on TB7.
   - On the Secondary controller in each boiler, connect to terminals 7 and 8 on TB7.
3. Enable a central heat call for each control on the system. This function must be set up for each controller separately. This function operates outside of the Lead/Lag system.

How to get there – Central Heat Enable

Home Page <Press the icon for one of the controllers> NeoTherm LC Primary Screen <Press Configure button> Primary Configuration Menu <Select line - CH Central Heat Configuration>

4. Fig. 96 shows the setup screen.

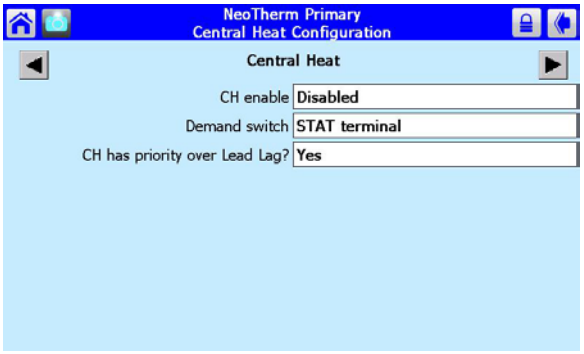

Fig. 96 - Central Heat Configuration

5. Enable the Central Heat function on the top line. Give the CH function the priority using the lower line.

Note - Laars offers "gateways" to allow connections to BACnet, LON, and other communications protocols. See Section 9.6.

Job O – Combustion Setup Procedure

(These are individual functions. Do the combustion setup for each of the burners.)

In this section, we will explain how to set up the gas valve so both burners in each boiler run efficiently at both the High Fire and Low Fire conditions. As we said, a boiler includes two controllers (Primary and Secondary), which control two burners (Primary and Secondary). See Fig. 97. Each burner has a separate gas valve, and each of these must be set up separately. Here's a quick summary of the procedure:

- You shut off one controller/burner combination, and work with the other.
- You set the working burner to run at High Fire, and adjust the gas valve to get the correct CO_2 reading.
- Next you set the same burner to run at Low Fire, and make another adjustment on the gas valve to get the desired CO_2 reading.
- When you are through, you shut off the controller/burner you have been working with, turn on the other controller/burner, and make the same adjustments there.

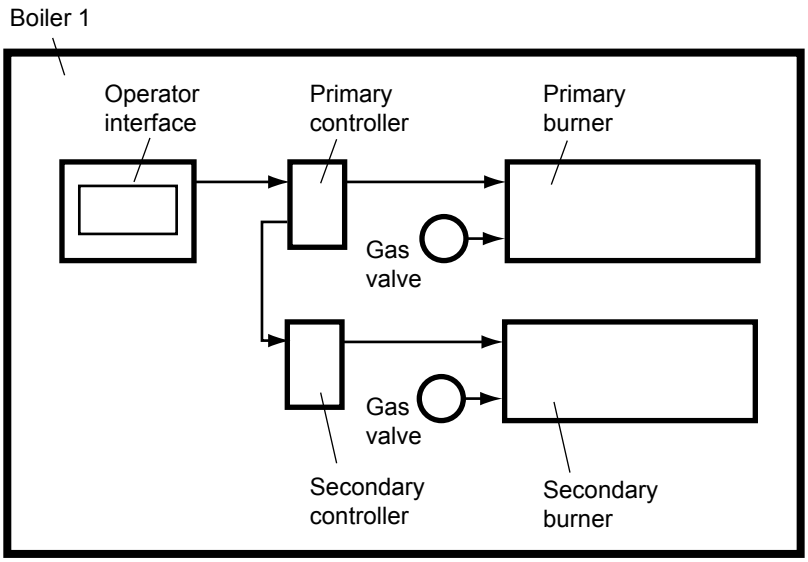

Fig. 97 – Primary and Secondary Burners in a Boiler

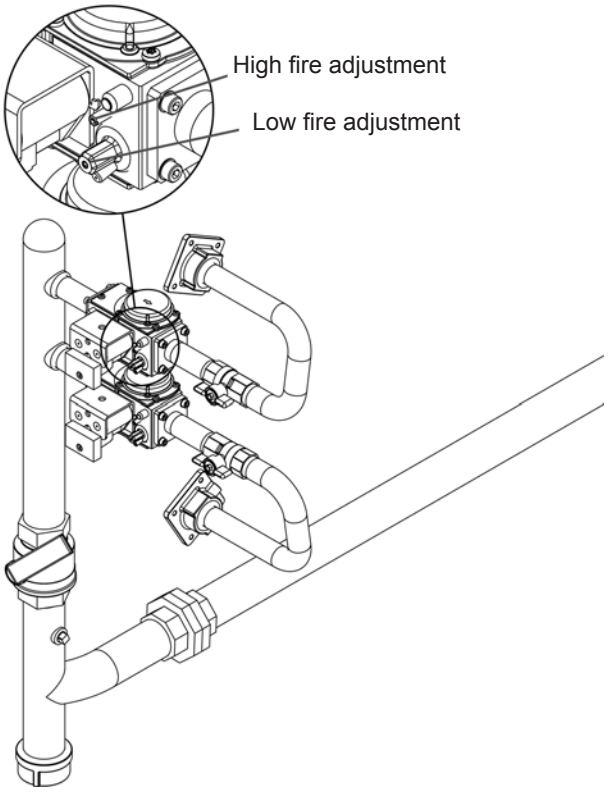

Fig. 98 – High and Low Fire Adjustments on Gas Valve - NT 1000

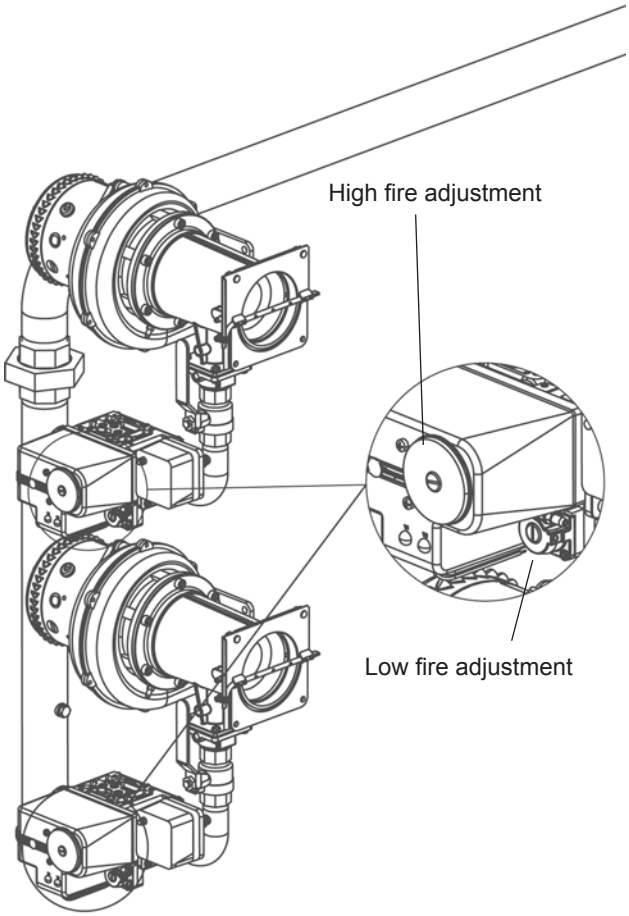

Fig. 99 – High and Low Fire Adjustments on Gas Valve - NT 1700

⚠ WARNING

Improper adjustment may lead to poor combustion quality, increasing the amount of carbon monoxide produced. Excess carbon monoxide levels may lead to personal injury or death.

Note – If you are setting up an NT 1700 unit for high-altitude operation, you must change the “low fire” RPM setting (“Minimum Modulation Rate”). See the instructions in Section 9.7.

Required tools: Screwdrivers, Torx bits, combustion analyzer

In the rest of this section we will explain the setup procedure in more detail.

1. On the gas valve for the Primary burner on the boiler, locate the adjustments for the high fire CO_2 and low fire CO_2. See Fig. 98 and 99.

   Table 17 lists the CO_2 readings you should see at high fire and low fire.
2. To start the setup, turn on the call for heat.
3. Before you can set up the Primary burner, you must shut off the Secondary burner. Go to the 'home' screen on the display. Press the icon for the control labeled Secondary.

Fig. 100 – 'home' screen

4. The system will present the Status Summary screen.

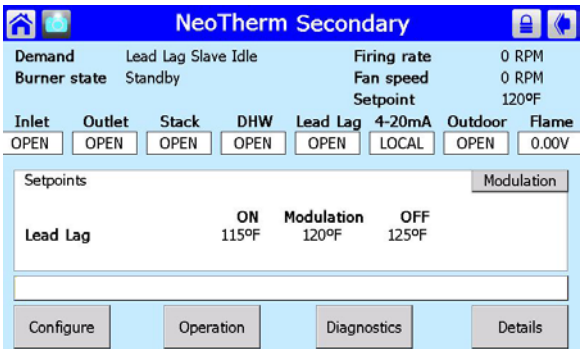

Fig. 101 – Status Summary Screen

5. Press the Operation button. The system will present the Operation screen for the Secondary burner.

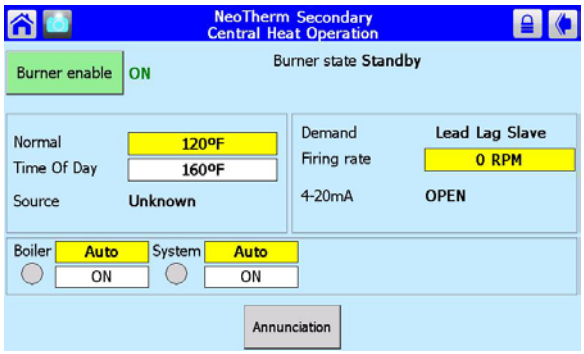

Fig. 102 – Operation Screen

Press the Burner Enable switch in the upper left-hand corner of the screen. Since you selected the Secondary control for this boiler, this will turn off the Secondary burner. The system will ask you to log in as you do this.

6. Now you can work with the Primary burner for this boiler. Press the Home icon to go back to the 'home' screen on the display (Fig. 100). Press the icon for the control labeled Primary.
7. The system will present the Status Summary screen for the Primary burner. Press the Operation button.
8. The system will present the Operation screen for the Primary burner.

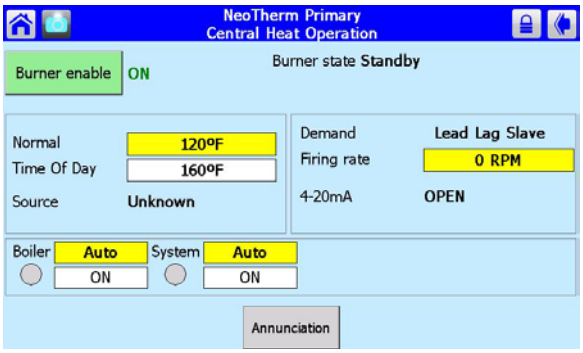

Fig. 103 – Operation Screen

Table 17 – CO_2 Range and Pressure Differential

Model	Gas Type	High Fire CO_2	Low Fire CO_2	Pressure Differential
1,000	Natural	8.5% ± 0.2	0.5% lower than high fire CO_2	0.5" to 1.2" wc*
	Propane	9.5% ± 0.2	0.5% lower than high fire CO_2	0.5" to 1.2" wc*
1,700	Natural	9.0% ± 0.2	0.5% lower than high fire CO_2	0.5" to 1.2" wc*
	Propane	10.0% ± 0.2	0.5% lower than high fire CO_2	0.5" to 1.2" wc*

* - Only check the pressures if there are problems getting the CO_2 and CO values in range.

9. You can change the fan speed of the burner by adjusting the value entered for Firing Rate on the right side of the display. (Remember, a moment ago you selected the Primary control for this boiler, so this change will only affect the Primary burner.) Press the yellow box beside the Firing Rate label.
10. The system will ask you to log in using a password. Enter the installer-level password, then press OK.
11. Press the box for Firing Rate again. The controller will present the Manual Firing Rate screen shown in Fig. 104.

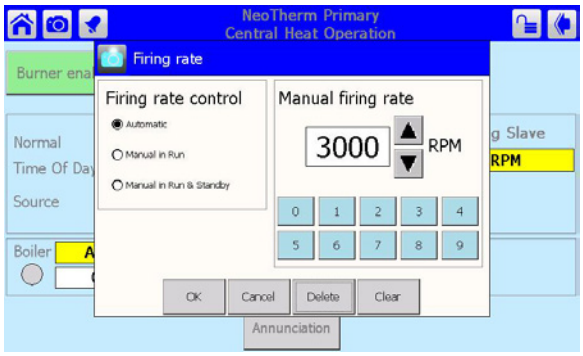

Fig. 104 - Manual Firing Rate

12. Notice the three options on the left side of the screen:

    Auto -

    The firing rate will be set automatically by the controller, based on the heat load. Set this item to Auto at the end of the test.

    Manual in Run -

    The Manual in Run control will only set the fan speed when the control has proven flame and the unit has entered the Run mode.

    Manual in Run and Standby -

    Using this setting, the manual control will set the fan speed whether the boiler is operating or not.

    For this test, select Manual in Run.

13. Type in a value for high fire RPM. Enter 8000 RPM. (The actual RPM will not go this high – the control will limit the fan speed to the maximum set at the factory.)

    By using the manual control, and entering a high RPM value, this forces the burner to run at full combustion so you can adjust the gas valve for the correct CO_2 output.

    Figures 105 and 106 show the adjusting points on the gas valve. Adjust the High Fire screw to get the proper CO_2 level for high fire. See Table 17. To raise the high fire CO_2 level,

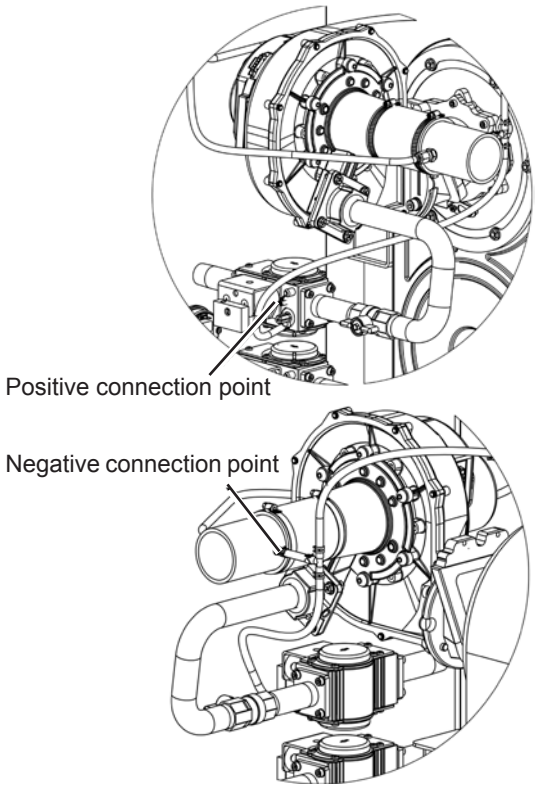

Fig. 105 – Connections for Pressure Gauge - NT 1000

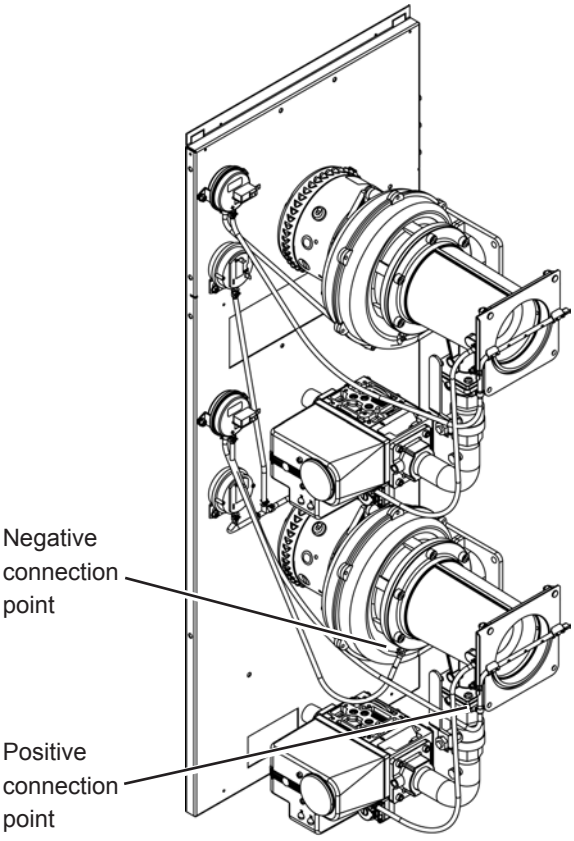

Fig. 106 – Connections for Pressure Gauge - NT 1700

turn the High Fire adjustment screw counter-clockwise. To lower the high fire CO_2 level, turn the screw clockwise.

(Make the adjustment in small steps of 1/8 turn to avoid "overshooting" the correct setting. The valve is built with a bit of "backlash." This makes it appear that changing the adjustment does not change the CO_2 level when you first stop turning the control in one direction, and start turning it the other way. Once the backlash has been taken up, the control will be quite sensitive.)

14. Repeat step 13, except this time set the fan speed RPM to 1200rpm. (Again, the actual RPM will not go this low – the control will limit the fan speed to the minimum set at the factory.) This will force the boiler to operate in low fire. Adjust the Low Fire screw so the CO_2 is 0.5% lower than the high fire CO_2. To raise the low fire CO_2, turn the Low Fire adjustment screw clockwise. To lower the low fire CO_2, turn the screw counter-clockwise.
15. The adjustment you made for the Low Fire setting could affect the High Fire setting, so you need to re-check the High Fire setting. Go back to the Operations screen and set the Firing Rate back to 8000 RPM. The CO_2 should still be about at the level listed in Table 17. If the CO_2 is not correct, repeat the steps listed above.
16. Set the Firing Rate back to 1200 RPM, and re-check the CO_2 during Low Fire.
17. Once the CO_2 values are correct for both High Fire and Low Fire, go back to the Operation screen and select Automatic operation. At this point, you have set up the Primary burner for this boiler.
18. Now you can do the same setup for the Secondary burner on this boiler. To do this, you need to shut off the Primary burner. On the Secondary control, you set the High and Low Fire RPM and check the CO_2 output for each condition. We will review the process quickly here:

    • On the 'home' screen, press the icon for the Primary controller.

    • On the Status Summary screen, press the Operation button.

    • On the Operation screen, turn off the Primary burner by pressing the Operation Enable button.

    • On the 'home' screen, press the icon for the Secondary controller.

    • On the Status Summary screen, press the Operation button.

    • On the Operation screen for the Secondary burner, press the yellow box for the Firing Rate. Login using the installer-level password, then press OK.

    • Now you can change the Firing Rate entry for the Secondary burner. Enter 8000 RPM for the High Fire value. Adjust the High Fire screw to get the CO_2 level listed in Table 17.

    • Set the Firing Rate to 1200rpm. Adjust the Low Fire screw so the CO_2 level reaches the CO_2 level listed in Table 17.

    • Re-check the High Fire setting at 8000 RPM. The CO_2 should still be about 8.5% or 9.0%, depending on the model size.

    • Re-check the CO_2 during Low Fire at 1200 RPM.

    • Once the CO_2 values are correct for both High Fire and Low Fire, go back to the Operation screen for the Secondary burner and select Automatic operation. At this point, you have set up the Secondary burner for this boiler.

    • Go back to the 'home' screen and press the icon for the Primary control. On the Status Summary screen, press the Operation button. On the Operation screen, press the Burner button to turn on the Primary burner.
19. Once both burners are set up properly, operate both burners together as described below, and check the CO_2 levels with the unit operating at high fire and at low fire. The final CO_2 values at high fire should be as listed in Table 17 ±0.2%. At low fire, the CO_2 should be about 0.5% lower than the high fire CO_2 reading. (The offset is more important than the actual CO_2 value)

    Monitor the CO_2 and CO levels for one complete operating cycle. The CO should never be more than 150 ppm. The CO_2 level should also track between the high and low limits listed in the table.

    Setting the fan speed RPMs for both burners operating together -

    • It is important that both burners operate at the same fan speed. Before changing the fan speeds, turn off the call for heat.

    • Set the fan speed for each burner separately, using the procedure we described earlier - steps 6 though 11 for the Primary burner, and step 18 for the Secondary burner. On each burner, enter a value of 8000 RPM for the high fire test.

    • Once you have set both burners to run at 8000 RPM, turn on the call for heat, and check the results as described above.

- Turn off the call for heat, and set both burners to run at 1200 RPM for low fire. Turn on the call for heat, and check the performance again.

20. If the CO_2 doesn't track between the correct limits, there is a possibility that one of the burners has not been set up correctly. If this occurs, repeat the setup procedure to confirm that each burner is set up correctly. If this condition persists, call the factory for assistance. Before calling, be prepared to supply the factory with the conditions at the site where the boiler is installed - for example, vent lengths, gas supply pressures with all boilers operating, CO_2 and CO for each burner individually and together, etc. Be able to describe the ignition characteristics and the color of the flame seen through the sight glass of each burner.
21. When troubleshooting a burner setup, it is sometimes helpful to watch the pressure differential between the gas inlet and outlet. To measure this, install a differential pressure gauge capable of reading negative 0.01 inches W.C. (0.002kPa). Attach the gauge to the positive and negative ports shown in Fig. 104. When the testing is complete, remove the pressure gauge, and plug the ports. Repeat the test setup on each burner.

Job P - Setting the Date and Time on the System Display

(This is a Lead/Lag function – do this once for the whole Lead/Lag system. Use the controller set up as the Lead/Lag Master – usually the Primary controller on Boiler 1.)

The display acting as the Lead/Lag Master includes an internal clock, which keeps track of the date and time. This setting is important, because all of the log entries for any Lockouts and Alerts include time listings. If the Date and Time setting for the Lead/Lag Master is not correct, the listings in the Lockout and Alert logs will be incorrect.

The current version of the display does not include a battery backup. This means that, if the boiler which includes the display loses power, the Date and Time setting for the system will be lost. (Any Faults or Alerts recorded before the boiler lost power will have the correct date and time listed.)

For this reason, it is important that you set the Date and Time in two situations:

- When you first set up the Lead/Lag system.
- After each occasion when the power to the boiler is interrupted.

Here is the procedure:

1. Start at the 'home' screen.

Fig. 107 – 'home' screen

2. Press the Setup button. The system will present the Setup screen.

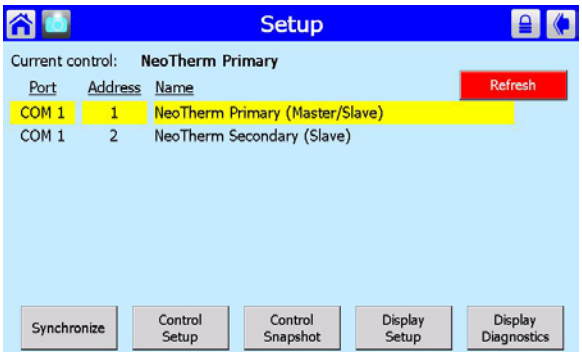

Fig. 108 – Setup Screen

3. Press the Display Setup button. The Display Setup screen is shown in Fig. 106.

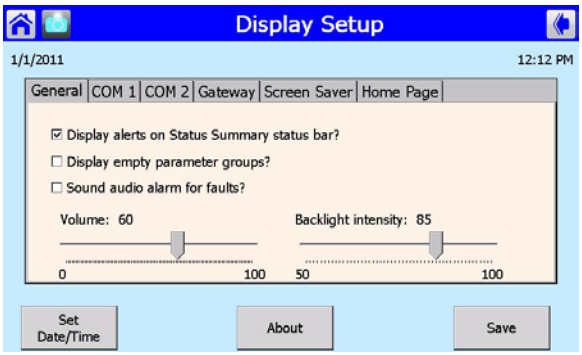

Fig. 109 – Display Setup Screen

4. Select Date and Time. Figure 107 shows the setup screen.

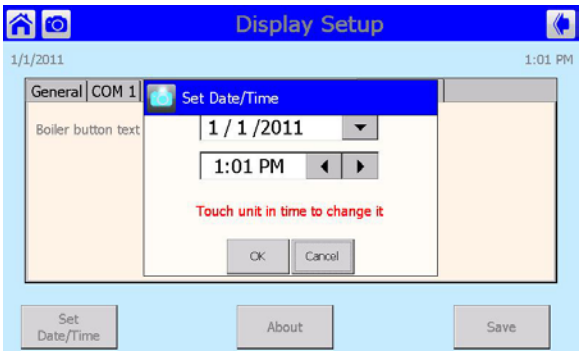

Fig. 110 – Date and Time

9.5 Setup for Domestic Hot Water on a Lead/Lag System

There are three ways that a NeoTherm LC system can be set up to provide domestic hot water. Two of them involve the use of an indirect water heater. In a system including an indirect water heater, hot water is circulated through a piping loop which runs through an insulated water tank. Heat from the water in the loop is transferred to the water in the tank, and the heated water in the tank is used as domestic hot water.

Setup Type 1 –

All of the boilers in the system can be set up to react together if there is a call for domestic hot water. This arrangement can be used for NTH or NTV units. When NTH units are used in this kind of setup, the demand for domestic hot water (DHW) is given priority over the demand for central heat (CH). If the system is producing heat for a CH demand, and a call for DHW arrives, all of the boilers will stop producing heat for CH, and the whole system will respond to the DHW demand. The DHW pump will start circulating water through the loop in the indirect water heater. The System sensor is used to control modulation in this configuration, so sensor placement is critical.

This arrangement can be cumbersome if the demand for domestic hot water is a lot less than the demand for central heating. This can result in multiple boilers "idling" as they wait for the DHW demand to be satisfied.

⚠ Caution

For NTH units - This arrangement can only be used in applications where all of the components in the system are rated for both the maximum hydronic temperature and the maximum DHW outlet temperature.

The setup for this is all done from within the Lead/Lag system. You will need to set up an LL CH setpoint and a separate LL DHW setpoint, and assign the priority to the DHW demand.

The input from the aquastat is brought to terminals 5 and 6 on TB6 on the controller which is acting as the Lead/Lag Master. (Usually, this is the Primary controller on Boiler 1.)

1. From the 'home' screen (Fig. 111), press the View Lead Lag button.

Fig. 111 – 'home' screen

2. Press the button for Lead Lag Master. Fig. 112 shows the screen that follows.

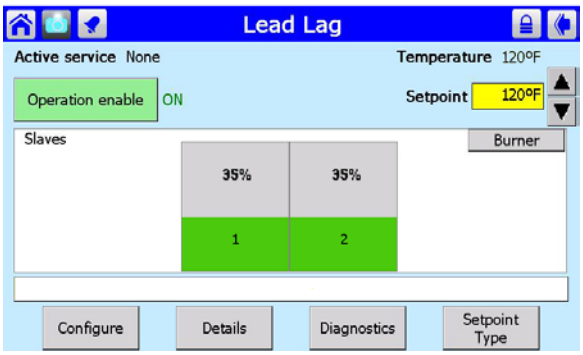

Fig. 112 – Lead/Lag Master Screen

3. Press the Configure button. The display will present the Lead/Lag Master Configuration Screen (Fig. 113).

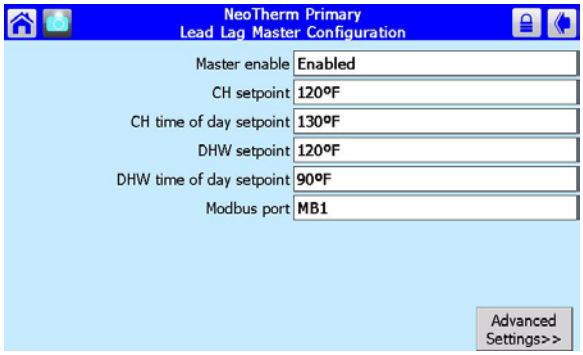

Fig. 113 – Lead/Lag Master Configuration

Entries on this screen allow you to set the CH setpoint and DHW setpoint.

4. Press the button for Advanced Settings. This leads to a "ring" of related screens, and you can scroll through the list by pressing one of the left- or right-arrow symbols. Press the left-arrow or right-arrow until you see the Domestic Hot Water screen (Fig. 114).

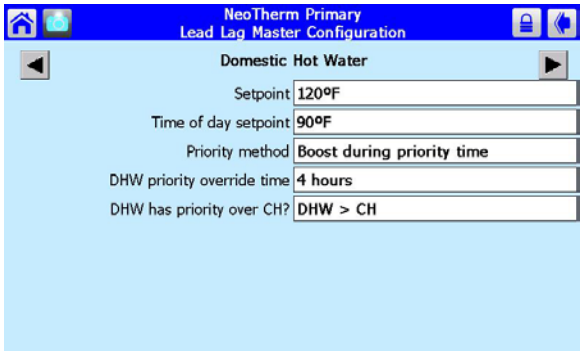

Fig. 114 – Domestic Hot Water

An entry on this screen allows you to give priority to the DHW function.

Setup Type 2 –

As a second option, a system can be set up so that only one or two boilers respond to a demand for domestic hot water. This allows the other boilers in the system to continue to service the demand for central heating. This system is more flexible, but the setup is a bit more complicated:

- All of the boilers are tied together in the normal way, using the Modbus connections.
- The DHW demand must switch over a whole boiler (including both burners), not just a single burner. Both burners in a boiler should always use the same setpoint.
- The plumbing must be set up so that, during DHW demand, each boiler used for DHW is pumped by the DHW pump, and the boiler pump is turned off. This will keep the temperature zones separate.
- Each of the boilers that will handle DHW is wired with an input from the aquastat used to indicate DHW demand. The aquastat demand should be jumpered from the Primary control in each boiler (terminals 5 and 6 on TB6 to terminals 7 and 8 on TB6).
- The LL CH setpoint used by all of the boilers is set in the normal way, working from the Lead/Lag section of the software.
- On each of the boilers used for DHW, priority is given to the DHW function. Because this affects individual boilers, rather than the whole system, this part of the setup is done from outside the Lead/Lag system.
- On each of the boilers used for DHW, the two burners in that boiler will operate in Lead/Lag mode. You can think of each of these boilers as a separate two-burner Lead/Lag system.

Once a system is set up this way, if there is no DHW demand, the system will operate like any other Lead/Lag system. If a demand for DHW arrives, the boilers used for DHW will stop providing heat for central heat. On the DHW boilers, the pump(s) for the DHW loops will start, and those boilers will provide heat to just the indirect water heaters.

Because this affects an individual boiler, and not the whole Lead/Lag system, the configuration is done from outside the Lead/Lag section of the software. Remember that the boiler includes two controller/burner combinations. You have to set the DHW priority on both of the controller/burners.

1. Start at the 'home' screen. Press the icon for the controller you want to configure.
2. The Status Summary page for that controller will appear. Press the Configure button.
3. The system will present the Configuration Menu screen. Scroll down until you see the line labeled "DHW Priority vs CH."

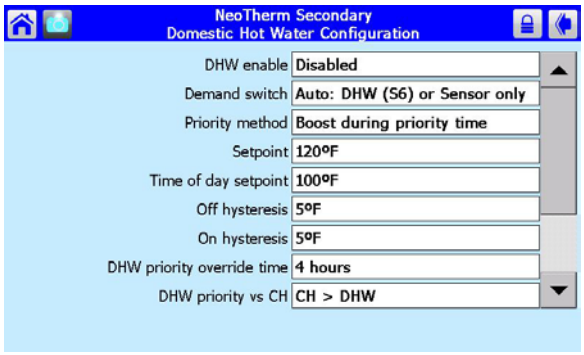

Fig. 115 – DHW Configuration Screen

4. Select that line by pressing it. If you want to change the DHW priority, the system will ask you to log in using the installer-level password. For this kind of installation, the entry should be "DHW> CH."
5. Go to the line for "DHW Priority vs Lead Lag." For this kind of installation, the entry should be "DHW> LL."
6. Remember to change the settings on the other controller/burner for this boiler.

Setup Type 3 –

The third possibility is to set up a single boiler that just provides domestic hot water. The model NTV unit is designed for this kind of "volume water" service. The water is heated as it moves through the boiler, and that same water is supplied directly for domestic use. This is really like a conventional Lead/Lag setup, except priority is given to domestic hot water, and there is no input for the central heating function.

- On each boiler which will operate this way, connect a DHW sensor or the input from the aquastat to terminals 5 and 6 on TB6. Be sure there is no thermostat connected (check terminals 5 and 6 on TB7).
- The two burners in each boiler will operate in the Lead/Lag mode. You can think of each boiler as a separate two-burner Lead/Lag system.
- The setpoint used is the LL DHW setpoint, set as part of the Lead/Lag system.
- In the Lead/Lag setup, DHW is given priority.

1. Start at the 'home' screen (Fig. 116).

Fig. 116 – 'home' screen

2. Press the Lead Lag Master button. Fig. 117 shows the screen that follows.

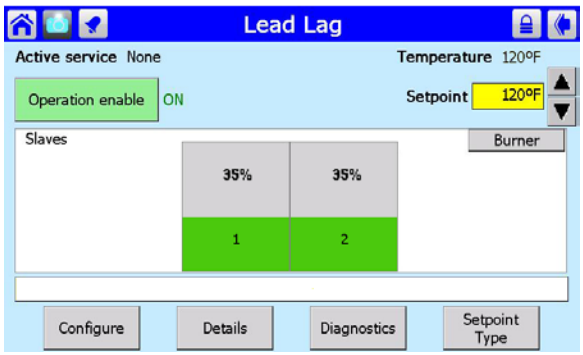

Fig. 117 – Lead/Lag Master Screen

3. Press the Configure button. The display will present the Lead/Lag Master Configuration Screen (Fig. 118). Set the DHW setpoint on this screen.

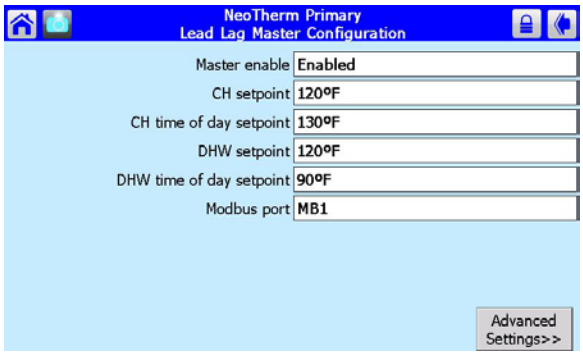

Fig. 118 – Lead/Lag Master Configuration

4. Press the button for Advanced Settings. This leads to a "ring" of related screens, and you can scroll through the list by pressing one of the left- or right-arrow symbols. Press the left-arrow or right-arrow until you see the Domestic Hot Water screen (Fig. 119).

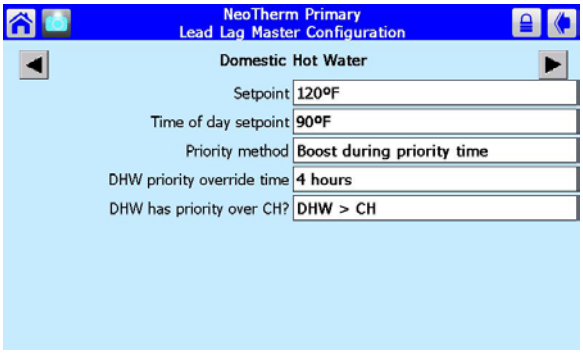

Fig. 119 – Domestic Hot Water

Set the last line to give priority to the DHW function.

9.6 Gateway Connections to a Building Automation System

NeoTherm LC boilers can be controlled and monitored through the included Modbus ports. The Modbus wiring should be completed according to the instructions in this manual. If alternate communication protocols are desired, Laars offers "gateways" to allow BACnet, LON, and other communications protocols. Signals from a Building Automation System can be connected to TB10. See Fig. 120. For additional information on setting up Modbus and other communication protocols, contact the factory.

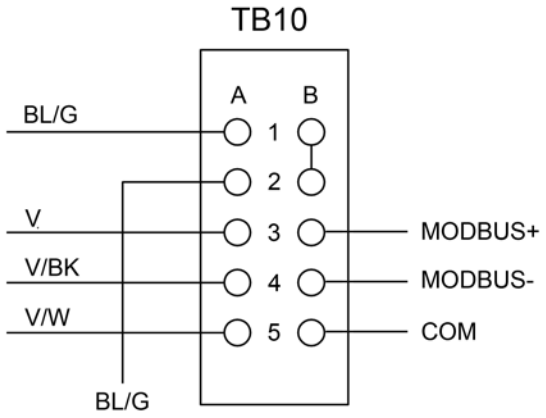

Fig. 120 - BAS Connections

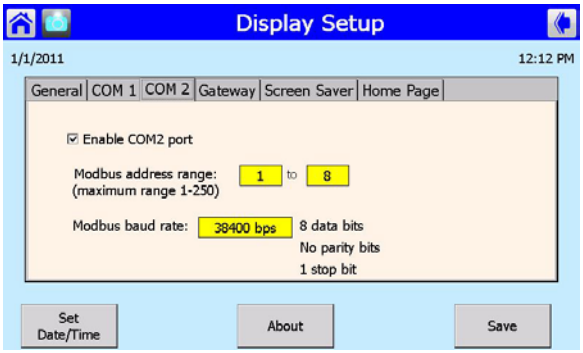

Fig. 121 - Enabling COM2

Enabling Modbus Port 2 -

For this system to work correctly, Modbus Port 2 on the unit operating as the Lead/Lag Master must be enabled. From the 'home' screen, press the Setup button to go to the Setup screen. Press the Display Setup button to go to the Display Setup screen. On the Display Setup screen, press the COM2 tab to bring up the setup screen for the COM2 function. Click the box labeled "Enable COM2 Port." See Fig. 121.

9.7 Setup for High Altitude Operation - NT 1700 Only

(This is an individual function – do this for each of the controls Use the separate Touch Screen on each boiler.)

When setting up a NT 1700 unit in a high altitude environment, a low fire adjustment must be made. The Minimum Modulation rate (RPM) must be increased from 2100 RPM to 2500 RPM. You will need to do this in the primary control, then again in the secondary control on each boiler.

How to get there – Minimum Modulation Rate

Home Page < Select one of the controller icons > NeoTherm LC Primary (or Secondary) screen < Press Configure button > Configuration Menu screen < Press line for Modulation Configuration > Modulation Configuration screen < Go to line for Minimum Modulation Rate, press box > < System asks you to login, press Lock symbol at top of screen > Keyboard screen < Type in installer-level password, then Enter > < Return to line for Minimum Modulation Rate, press Clear, type "2500", then Enter >

Remember to do this for both the primary and secondary controls on each of the boilers.

9.8 Installer Parameters

This is a list of all of the parameters which can be accessed using the Installer password.

Label	Description	How to Reach
4 mA water temperature	If a 4 – 20 mA input is used to adjust the setpoint, this entry sets the low limit of the control range. (In the example shown here, an input of 4 mA would result in a setpoint of 90°F.)	<'home' screen> Lead Lag Master button <Lead Lag Master screen> Configure button <Lead Lag Master Configuration screen> Advanced Settings button <Central Heat screen>
20 mA water temperature	If a 4 – 20 mA input is used to adjust the setpoint, this entry sets the high limit of the control range. (In the example shown here, an input of 20 mA would result in a setpoint of 120°F.)	<'home' screen> Lead Lag Master button <Lead Lag Master screen> Configure button<Lead Lag Master Configuration screen> Advanced Settings button<Central Heat screen>
Anti Short Cycle Time	This can be set to prevent the system from cycling on and off quickly if the heat demand is near the setpoint and changes quickly.	<'home' screen> Select a controller <Status Summary screen> Configure button <Configuration Menu> Select System Configuration <System Configuration screen>
Boiler pump control	The Boiler pump (Pump A) can be turned on manually, or it can be set to operate automatically. If it is turned on, then it remains on until the control is changed back to Auto. In Auto mode it operates according to the demand and overrun time."	<'home' screen> Select a controller <Status Summary screen> Configuration button <Pump Configuration> Left- or Right-arrow buttons <Boiler Pump screen> Control Settings button
Boiler Pump Cycle Count	Boiler pump cycle count. Can be written to a new value (e.g. if the pump or controller is replaced).	<'home' screen> Select a controller <Status Summary screen> Configure button <Configuration Menu> Select Statistics Configuration line
Boiler Name	This parameter allows the installer to give each controller a unique name.	<'home' screen> Select a controller <Status Summary screen> Configuration button <Configuration Menu> System ID and Access
Burner Cycle Count	This is incremented on each entry to Run. It can be written to a with a new value if the burner or controller is replaced.	<'home' screen> Select a controller <Status Summary screen> Configure button <Configuration Menu> Select Statistics Configuration line
Burner Enable Switch	This parameter enables or disables the burner control. When it is off, the burner will not fire.	<'home' screen> Select a controller <Status Summary screen> Operation button <Operation screen>
Burner Run Time	This measures the time spent in the Run state. It can be written to with a new value if the burner or controller is replaced.	<'home' screen> Select a controller <Status Summary screen> Configure button <Configuration Menu> Select Statistics Configuration line
CH (Central Heat) D gain	This gain is applied to the Differential term of the PID equation for the CH loop.	<'home' screen> Select a controller <Status Summary screen> Configuration button <Central Heat Configuration> Arrow keys <Modulation screen>
CH (Central Heat) Enable	This parameter determines whether the Central Heat loop is enabled or disabled. When it is disabled, heat demand caused by the input assigned to the CH loop is ignored. It may be disabled to turn it off temporarily, or because the application does not use this feature.	'home' screen/ Select controller/ Status Summary screen/ Configuration button/ Central Heat Configuration/ Arrow keys/ Central Heat screen
CH (Central Heat) Frost Protection Enable	The CH frost protection feature can be enabled to run a pump (or pumps) and possibly fire the burner whenever the CH input sensor is too cold.	'home' screen/ Select controller/ Status Summary screen/ Configuration button/ Anti-Condensation Configuration/

Label	Description	How to Reach
CH (Central Heat) has priority over LL (Lead/ Lag)	This controls whether a local Central Heat demand has priority over the control asserted by the LL Master, when this controller is enabled as a slave.	If Lead/Lag enabled – <'home' screen> Lead/Lag Master button <Lead/Lag Master screen> Configure button <Lead/Lag Master Configuration screen> Advanced Settings button Left- and Right-arrow buttons <Domestic Hot Water screen>
CH (Central Heat) I gain	This gain is applied to the Integral term of the PID equation for the CH loop.	<'home' screen> Select a controller <Status Summary screen> Configuration button <Central Heat Configuration screen> Left- and Right arrow buttons <Modulation screen>
CH (Central Heat) Modulation Sensor	This selects the sensor used for modulation and burner demand for the CH loop.	<'home' screen> Select a controller <Status Summary screen> Configuration button <Central Heat Configuration> Left- and Right-arrow buttons <Modulation screen>
CH (Central Heat) Outdoor Reset Low Water Temperature	This parameter provides the CH Outdoor Reset setpoint when the outdoor temperature is at or above the maximum specified by the Max. Outdoor Temperature.	<'home' screen> Lead/Lag Master button <Lead/Lag Master screen> Configure button <Lead/Lag Master Configuration screen> Advanced Settings button/ Left- or Right- arrow buttons <Outdoor Reset screen>
CH (Central Heat) ODR (Outdoor Reset) Max. Outdoor Temperature	This parameter determines the maximum outdoor temperature for the CH outdoor reset graph. At or above the maximum outdoor temperature, the water temperature setpoint will be at the low water temperature.	<'home' screen> Lead/Lag Master button <Lead/Lag Master screen> Configure button <Lead/Lag Master Configuration screen> Advanced Settings button/ Left- or Right- arrow buttons <Outdoor Reset screen>
CH (Central Heat) Off Hysteresis	The off hysteresis is added to the CH setpoint to determine the temperature at which the burner demand turns off.	<'home' screen> Select controller <Status Summary screen> Configuration button <Central Heat Configuration> Arrow keys <Modulation screen>
CH (Central Heat) On Hysteresis	The on hysteresis is subtracted from the CH Setpoint to determine the temperature at which the burner demand turns on.	<'home' screen> Select a controller <Status Summary screen> Configuration button <Central Heat Configuration screen> Arrow keys <Modulation screen>
CH (Central Heat) Outdoor Reset Enable	If outdoor reset is enabled, then the current outdoor temperature is used to determine the setpoint by interpolation using the CH Setpoint (or the CH Time-Of-Day Setpoint if the Time-Of-Day feature is on), the low water temperature, and the min. and max. outdoor temperatures.	<'home' screen> Lead/Lag Master button <Lead/Lag Master screen> Configure button <Lead/Lag Master Configuration screen> Advanced Settings button/ Left- or Right- arrow buttons <Outdoor Reset screen>
CH (Central Heat) P gain	This gain is applied to the proportional term of the PID equation for the CH loop.	<'home' screen> Select a controller <Status Summary screen> Configuration button <Central Heat Configuration screen> Arrow keys <Modulation screen>
CH (Central Heat) Pump Control	The CH pump (System pump – Pump C) can be turned on manually, or it can be set to operate automatically. If it is turned on then it remains on until changed back to Auto. In Auto mode it operates according to the demand sources listed above and the overrun time.	<'home' screen> Select a controller <Status Summary screen> Configuration screen <Pump Configuration screen> Left- or Right- arrow buttons <System Pump screen> Control Settings button

Label	Description	How to Reach
CH (Central Heat) Setpoint	This setpoint is used when the time-of-day input is off. If the outdoor reset function is active, this setpoint provides one coordinate for the outdoor reset curve. See the section for the CH Outdoor Reset parameter.	If Lead/Lag enabled – <'home' screen> Lead/Lag Master button <Lead/Lag Master screen> Configure button <Lead/Lag Master Configuration screen>
CH (Central Heat) "Time of Day" Setpoint	This setpoint is used when the time-of-day input is on. If the outdoor reset function is active, this Setpoint provides one coordinate for the shifted outdoor reset curve, because the time-of-day switch is on. See the section for the CH Outdoor Reset parameter."	If Lead/Lag enabled – <'home' screen> Lead/Lag Master button <Lead/Lag Master screen> Configure button <Lead/Lag Master Configuration screen>
DHW (Domestic Hot Water) D Gain	This gain applied to the Differential term of the PID equation for the DHW loop.	<'home' screen> Select a controller <Status Summary screen> Configure button <Domestic Hot Water Configuration screen>
DHW (Domestic Hot Water) Enable	This parameter determines whether the Domestic Hot Water loop is enabled or disabled. When it is disabled, the demand caused by the DHW sensor is ignored. It may be disabled to turn it off temporarily or because the application does not use this feature.	<'home' screen> Select a controller <Status Summary screen> Configure button <Domestic Hot Water Configuration screen>
DHW (Domestic Hot Water) has priority over CH (Central Heat)	This parameter determines the priority of Domestic Hot Water vs. Central Heat call-for-heat, when both of these are enabled and active. (The DHW priority also may shift for a period of time, as specified by DHW Priority time and method parameters.)"	<'home' screen> Lead Lag Master <Lead Lag Master screen> Configure button <Lead Lag Master Configuration screen> Advanced Settings button/ Left- and Right- arrow buttons <Domestic Hot Water screen>
DHW (Domestic Hot Water) I gain	This gain applied to the Integral term of the PID equation for the DHW loop.	<'home' screen> Select a controller <Status Summary screen> Configure button <Domestic Hot Water Configuration>
DHW (Domestic Hot Water) off hysteresis	The off hysteresis is added to the Domestic Hot Water Setpoint to determine the temperature at which the DHW burner demand turns off.	<'home' screen> Select a controller <Status Summary screen> Configure button <Domestic Hot Water Configuration screen>
DHW (Domestic Hot Water) on hysteresis	The on hysteresis is subtracted from the Domestic Hot Water Setpoint to determine the temperature at which the DHW burner demand turns on.	<'home' screen> Select a controller <Status Summary screen> Configure button <Domestic Hot Water Configuration>
DHW (Domestic Hot Water) P gain	This gain applied to the Proportional term of the PID equation for the DHW loop.	<'home' screen> Select a controller <Status Summary screen> Configure button <Domestic Hot Water Configuration screen>
DHW (Domestic Hot Water) priority override time	If this parameter is non-zero then a Domestic Hot Water demand will shift its priority vs. other demand sources according to the specified time. The priority override timing is reset when demand from the DHW source turns off.	<'home' screen> Lead Lag Master button <Lead Lag Master screen> Configure button <Lead Lag Master Configuration screen> Advanced Settings button <Domestic Hot Water screen>

Label	Description	How to Reach
DHW (Domestic Hot Water) pump control	The DHW pump (Pump C) can be turned on manually, or it can be set to operate automatically. If it is turned on then it remains on until changed back to Auto. In Auto mode it operates according to the DHW demand, the start delay timer and the overrun time.	<'home' screen> Select a controller <Status Summary screen> Configure button <Configuration Menu> Pump Configuration/ Left- or Right- arrow buttons <DHW Pump screen> Control Settings button
DHW (Domestic Hot Water) pump cycle count	This can be written to a new value if the pump or controller is replaced.	<'home' screen> Select a controller <Status Summary screen> Configure button <Configuration Menu> Select Statistics Configuration line
DHW (Domestic Hot Water) Setpoint	This setpoint is used for Domestic Hot Water whenever the Time-Of-Day switch is off or not connected (unused).	If Lead/Lag enabled – <'home' screen> Lead/Lag Master button <Lead/Lag Master screen> Configure button <Lead/Lag Master Configuration screen>
DHW (Domestic Hot Water) TOD (Time of Day) Setpoint	This setpoint is used for Domestic Hot Water when the Time-Of-Day switch is on.	If Lead/Lag enabled – <'home' screen> Lead/Lag Master button <Lead/Lag Master screen> Configure button <Lead/Lag Master Configuration screen>
Flap valve controller ID	Each flap valve has a unique ID number. On a system with 4 boilers, there would be 8 flap valves, numbered 1 through 8.	<'home' screen> Select a controller <Status Summary screen> Configurate button <Flap Valve Configuration screen>
Lead lag CH outdoor reset enable	This line is used to turn on the Outdoor Reset function when the Lead/Lag system is enabled.	If Lead/Lag enabled – <'home' screen> Lead/Lag Master button <Lead/Lag Master screen> Configure button <Lead/Lag Master Configuration screen> Advanced Settings button/ Left- or Right- arrow buttons <Outdoor Reset screen>
Lead lag CH setpoint	This is the setpoint used for Central Heat when the Lead/Lag system is enabled.	If Lead/Lag enabled – <'home' screen> Lead/Lag Master button <Lead/Lag Master screen> Configure button <Lead/Lag Master Configuration screen>
Lead lag CH setpoint source	When Lead/Lag is enabled, this sets the source of the System sensor input used to control the system. The options here are Local and 4-20 mA.	'home' screen/ View Lead/Lag button/ Lead/Lag screen/ Lead/Lag Master button/ Lead/Lag Master screen/ Configure button/ Lead/Lag Master Configuration screen/ Advanced Settings button/ Left- or Right- arrow buttons/ Central Heat screen
Lead lag CH TOD setpoint	This is a different setpoint used for Central Heat when the Lead/Lag system is enabled and the input from the Time Of Day switch is "true."	If Lead/Lag enabled – <'home' screen> Lead/Lag Master button <Lead/Lag Master screen> Configure button <Lead/Lag Master Configuration screen>

Label	Description	How to Reach
Lead lag D gain	This is part of the damping function ("Derivative") used when the controller interprets the input from the System sensor.	<'home' screen> Lead/Lag Master button <Lead/Lag Master screen> Configure button <Lead/Lag Master Configuration screen> Advanced Settings button/ Left- or Right- arrow buttons <Modulation screen>
Lead lag DHW demand switch	This indicates source of the aquastat signal used to control the Domestic Hot Water loop.	<'home' screen> Lead/Lag Master button <Lead/Lag Master screen> Configure button <Lead/Lag Master Configuration screen> Advanced Settings button/ Left- or Right- arrow buttons <Domestic Hot Water screen>
Lead lag DHW has priority over CH	Choose Central Heating priority or Domestic Hot Water priority.	<'home' screen> Lead/Lag Master button <Lead/Lag Master screen> Configure button <Lead/Lag Master Configuration screen> Advanced Settings button/ Left- or Right- arrow buttons <Domestic Hot Water screen>
Lead Lag DHW priority override time	If Domestic Hot Water has priority, this sets how long the DHW loop will continue to have control after the DHW demand stops.	<'home' screen> Lead/Lag Master button <Lead/Lag Master screen> Configure button <Lead/Lag Master Configuration screen> Advanced Settings button/ Left- or Right- arrow buttons <Domestic Hot Water screen>
Lead lag DHW setpoint	This is the setpoint used for Domestic Hot Water when the Lead/Lag system is enabled.	<'home' screen> Lead/Lag Master button <Lead/Lag Master screen> Configure button <Lead/Lag Master Configuration screen>
Lead lag DHW TOD setpoint	This is a different setpoint used for Domestic Hot Water when the Lead/Lag system is enabled and the input from the Time Of Day switch is "true."	<'home' screen> Lead/Lag Master button <Lead/Lag Master screen> Configure button <Lead/Lag Master Configuration screen>
Lead lag I gain	This is part of the damping function ("Integral") used when the controller interprets the input from the System sensor.	<'home' screen> Lead/Lag Master button <Lead/Lag Master screen> Configure button <Lead/Lag Master Configuration screen> Advanced Settings button/ Left- or Right- arrow buttons <Modulation screen>
Lead lag master enable/ disable	One of the controllers must be set up as the Lead/Lag Master to supervise the Lead/lag system. Usually this is the Primary controller on Boiler 1. The master function must be disabled on all of the other controllers. See the section on "About Lead/Lag."	<'home' screen> Lead/Lag Master button <Lead/Lag Master screen> Configure button <Lead/Lag Master Configuration screen>
Lead lag off hysteresis	When the Lead/Lag function is enabled, the control system will not shut off the boilers until the temperature at the System sensor rises to the Lead/Lag CH setpoint plus a hysteresis value (normally about 10°F).	<'home' screen> Lead/Lag Master button <Lead/Lag Master screen> Configure button <Lead/Lag Master Configuration screen> Advanced Settings button/ Left- or Right- arrow buttons <Modulation screen>

Label	Description	How to Reach
Lead lag on hysteresis	When the Lead/Lag function is enabled, the control system will not fire the boilers until the temperature at the System sensor drops to the Lead/Lag CH setpoint minus a hysteresis value (normally about 10°F).	If Lead/Lag enabled – <'home' screen> Lead/Lag Master button <Lead/Lag Master screen> Configure button <Lead/Lag Master Configuration screen>
Lead lag P gain	This is part of the damping function ("Proportional") used when the controller interprets the input from the System sensor.	<'home' screen> Lead/Lag Master button <Lead/Lag Master screen> Configure button <Lead/Lag Master Configuration screen> Advanced Settings button/ Left- or Right- arrow buttons <Modulation screen>
Lead/Lag Slave Enable	Select Enable Slave for Built-in Lead/Lag Master. Be sure this is turned on for each controller in the system.	<'home' screen> Select a controller <Status Summary screen> Configure button <Configuration Menu> Select line for LL Slave Configuration <Lead/Lag Slave Configuration screen>
Lead/ Lag Slave Sequence Order	Enter the position of this Slave in the sequence. Be sure to enter this for each Slave in the system.	<'home' screen> Select a controller <Status Summary screen> Configure button <Configuration Menu> Select line for LL Slave Configuration <Lead/Lag Slave Configuration screen>
Lead/ Lag Slave Modbus Address	Each slave must have a unique Modbus address. Be sure to enter this for each controller in the system.	<'home' screen> Select a controller <Status Summary screen> Configure button <Configuration Menu> Select line for LL Slave Configuration <Lead/Lag Slave Configuration screen>
Lead/Lag Outdoor Reset Enable	Enable = Outdoor Reset feature turned on	<'home' screen> Lead/Lag Master button <Lead/Lag Master screen> Configure button <Lead/Lag Master Configuration screen> Advanced Settings button/ Left- or Right- arrow buttons <Outdoor Reset screen>
Lead/Lag Outdoor Reset low water temperature	This parameter is used as the normal setpoint above the point where Outdoor Reset stops adjusting for a higher outdoor temperature (the Max. Outdoor Temperature value)	<'home' screen> Lead/Lag Master button <Lead/Lag Master screen> Configure button <Lead/Lag Master Configuration screen> Advanced Settings button/ Left- or Right- arrow buttons <Outdoor Reset screen>
Lead/Lag Outdoor Reset max outdoor temperature	If Lead/Lag is enabled, this is the maximum outdoor temperature at which the Outdoor Reset feature will be active.	<'home' screen> Lead/Lag Master button <Lead/Lag Master screen> Configure button <Lead/Lag Master Configuration screen> Advanced Settings button/ Left- or Right- arrow buttons <Outdoor Reset screen>
Lead/Lag Outdoor Reset min outdoor temperature	If Lead/Lag is enabled, this is the minimum outdoor temperature at which the Outdoor Reset feature will be active.	<'home' screen> Lead/Lag Master button <Lead/Lag Master screen> Configure button <Lead/Lag Master Configuration screen> Advanced Settings button/ Left- or Right- arrow buttons <Outdoor Reset screen>

Label	Description	How to Reach
Modbus address	Each controller must have a unique Modbus address.	<'home' screen> Setup button <Setup screen> Control setup button/ Change address button
Number of controllers in Flap Valve system	Each controller needs to know how many flap valves are included in the whole system. On a system with 4 boilers, there would be a total of 8 flap valves.	<'home' screen> Select a controller <Status Summary screen> Configure button <Configuration Menu> Select Flap Valve Configuration
Outdoor temperature source	This configures which source is used to provide outdoor temperature data: S5 sensor, S10 sensor, Enviracom sensor, or Modbus communication"	<'home' screen> Select a controller <Status Summary screen> Configure button <Configuration Menu> Select Sensor Configuration
System pump cycle count	System pump cycle count. Can be written to a new value (e.g. if the pump or controller is replaced).	<'home' screen> Select a controller <Status Summary screen> Configure button <Configuration Menu> Select Statistics Configuration
Temperature units	This parameter determines whether temperature is represented in units of Fahrenheit or Celsius degrees.	<'home' screen> Select a controller <Status Summary screen> Configure button <Configuration Menu> Select System Configuration
Lead/ Lag Warm Weather Shutdown Enable	When the Lead/Lag system is enabled, and this feature is enabled, this feature will turn off the whole system (for Central Heating functions) when the outdoor temperature is warm enough. This prevents the system from running when there is no need for heat.	If Lead/Lag enabled – <'home' screen> Lead/Lag Master button <Lead/Lag Master screen> Configure button <Lead/Lag Master Configuration screen> Advanced Settings button/ Left- or Right- arrow buttons
Warm weather shutdown setpoint	If the outdoor temperature is higher than this, the system will be shut off for Central Heating functions.	If Lead/Lag enabled – 'home' screen/ View Lead/Lag button/ Lead/Lag screen/ Lead/Lag Master button/ Lead/Lag Master screen/ Configure button/ Lead/Lag Master

Section 10
INITIAL STARTUP INSTRUCTIONS

10.1 Filling the Boiler System

1. Ensure the system is fully connected. Close all bleeding devices and open the make-up water valve. Allow the system to fill slowly.
2. If a make-up water pump is employed, adjust the pressure switch on pumping system to provide a minimum of 12 psi (81.8 kPa) at the highest point in the heating loop.
3. If a water pressure regulator is provided on the make-up water line, adjust the pressure regulator to provide at least 12 psi (81.8 kPa) at the highest point in the heating loop.
4. Open any bleeding devices on all radiation units at the high points in the piping throughout the system, unless automatic air bleeders are provided at those points.

Note - There is an air bleed located on the right side of the NeoTherm LC, on top of the water manifold.

5. To remove all air from the heat exchanger, cycle the boiler pump on and off 10 times, 10 seconds on and 10 seconds off. Then run the System and Boiler pumps for a minimum of 30 minutes with the gas shut off.

⚠ WARNING

Failure to remove all air from the heat exchanger could lead to property damage, severe injury or death.

6. Open all strainers in the circulating system, check the operation of the flow switch (if equipped), and check for debris. If debris is present, clean out the strainers to ensure proper circulation.
7. Recheck all air bleeders as described in Step 4.
8. Check the liquid level in the expansion tank. With the system full of water and under normal operating pressure, the level of water in the expansion tank should not exceed ¼ of the total, with the balance filled with air.
9. Start up the boiler following the procedure in this manual. Operate the entire system, including the pump, boiler, and radiation units for one hour.
10. Recheck the water level in the expansion tank. If the water level exceeds ¼ of the volume of the expansion tank, open the tank drain, and drain to that level.
11. Shut down the entire system and vent all radiation units and high points in the system piping, as described in Step 4.
12. Close the make-up water valve. Check the strainer in the pressure reducing valve for sediment or debris from the make-up water line. Reopen the make-up water valve.
13. Check the gauge for correct water pressure, and also check the water level in the system. If the height indicated above the boiler ensures that water is at the highest point in the circulating loop, then the system is ready for operation.
14. Refer to local codes and the make-up water valve manufacturer's instructions as to whether the make-up water valve should be left open or closed.
15. After placing the unit in operation, the ignition system safety shutoff device must be tested.

    First, shut off the manual gas valve, and call the unit for heat. The main gas terminals will be energized, attempting to light, for four seconds, and then will de-energize. The unit will go into lockout after the required number of trial for ignition periods.

    Second, turn the power off, press the manual reset button on the boiler control, or the user display, open the manual gas valve and allow the unit to light. While the unit is operating, close the manual gas valve and ensure that power to the main gas valve has been cut.
16. Within three days of start-up, recheck all air bleeders and the expansion tank as described in Steps 4 and 8 above.

Note - The installer is responsible for identifying to the owner/operator the location of all emergency shutoff devices.

⚠ WARNING

Do not use this appliance if any part has been under water. Immediately call a qualified service technician to inspect the appliance and to replace any part of the control system and any gas control that may have been under water.

10.2 Initial Operation

The initial setup must be checked before the unit is put into operation. Problems such as failure to start, rough ignition, strong exhaust odors, etc. can be due to improper setup. Damage to the boiler resulting from improper setup is not covered by the limited warranty.

10.2.1 Initial Burner Operation

1. Using this manual, make sure the installation is complete and in full compliance with the instructions and all local codes.
2. Determine that the unit and system are filled with water and all air has been bled from both. Open all valves.
3. Observe all warnings on the Operating Instructions label and turn on gas and electrical power to the unit.
4. The NeoTherm LC will enter the start sequence. The blower and pump will energize for pre-purge, then the ignition sequence will start. After all safety devices are verified, the gas valve will open. If ignition doesn't occur, turn off the NeoTherm LC. Check that there is proper supply of gas. Wait five minutes and start the unit again.
5. If ignition starts normally, leave the NeoTherm LC turned on.
6. After placing the unit in operation, the Burner Safety Shutoff Device must be tested:
   (a) Close the gas shutoff valve with the burner operating.
   (b) The flame will go out, and the blower will continue to run for the post purge cycle. A few additional attempts to light will follow including pre-purge, ignitor on, valve/flame on and post purge. Ignition will not occur because the gas is turned off. The ignition control will lockout.
   (c) Open the gas shutoff valve. Reset the boiler control by pressing the Reset button on the control. Restart the appliance. The ignition sequence will start again and the burner will start. The appliance will return to its previous mode of operation.

⚠ Caution

If any odor of gas is detected, or if the gas burner does not appear to be functioning in a normal manner, ***close the main gas shutoff valve***. Do not shut off the power switch. Contact your heating contractor, gas company, or factory representative.

10.2.2 Combustion Setup Procedure

See the detailed instructions in Section 9.

⚠ WARNING

Improper adjustment may lead to poor combustion quality, increasing the amount of carbon monoxide produced. Excessive carbon monoxide levels may lead to personal injury or death.

10.3 Shutting Down the NeoTherm LC

This step must be performed by a qualified service person.

1. Turn off the main electrical disconnect switch.
2. Close all manual gas valves.
3. If freezing is anticipated, drain the NeoTherm LC and be sure to also protect the building piping from freezing. All water must be removed from the heat exchanger or damage from freezing may occur.

10.4 Restarting the NeoTherm LC

If the system has been drained, see Section 10.1 for instructions on proper filling and purging.

1. Turn off the main electrical disconnect switch.
2. Close all manual gas valves.
3. ***Wait five minutes.***
4. Set the aquastat or thermostat to its lowest setting.
5. Open all manual gas valves.
6. Reset all safety switches (pressure switch, manual reset high limit, etc.).
7. Set the temperature controller to the desired temperature setting and switch on the electrical power.
8. Each burner will go through a prepurge period and ignitor warm-up period, followed by ignition.

Section 11
MAINTENANCE

⚠ WARNING

Disconnect all power to the unit before attempting any service procedures. Contact with electricity can result in severe injury or death.

11.1 System Maintenance

Do the following once a year:

1. Lubricate the System pump, if required, per the instructions on the pump.
2. Inspect the venting system for obstruction or leakage. Periodically clean the screens in the vent terminal and combustion air terminal (when used).
3. Keep the area around the unit clear and free of combustible materials, gasoline, or other flammable vapors or liquids.
4. If the unit is not going to be used for extended periods in locations where freezing normally occurs, it should be isolated from the system and completely drained of all water.
5. Low water cutoffs, if installed, should be checked every year. Float type low water cutoffs should be flushed periodically.
6. Inspect and clean the condensate collection, float switch and disposal system yearly.
7. When a means is provided to neutralize condensate, ensure that the condensate is being neutralized properly.
8. Inspect the flue passages, and clean them using brushes or vacuums, if necessary. Sooting in flue passages indicates improper combustion. Determine the cause of the problem and correct it.
9. Inspect the vent system and air intake system, and ensure that all joints are sealed properly. If any joints need to be resealed, completely remove the existing sealing material, and clean with alcohol. Apply new sealing material, and reassemble.
10. Once a year, the items listed below should be inspected by a qualified service technician:
    a. Appliance control
    b. Automatic gas valve
    c. Pressure switches
    d. Blower
    e. Pump
    f. Flow switch
    g. Low water cutoff
    h. Burner
    i. Heat exchanger

Do the following once every six months:

1. If a strainer is employed in a pressure reducing valve or the piping, clean it every six months.

11.2 Maintenance Notes

Use only genuine LAARS replacement parts.

⚠ Caution

When servicing the controls, label all wires before disconnecting them. Wiring errors can cause improper and dangerous operation. Verify proper operation after servicing.

The gas and electric controls in the NeoTherm LC are engineered for long life and dependable operation, but the safety of the equipment depends on their proper functioning.

11.2.1 Burner

Check the burner for debris. Remove the blower arm assembly to access the burner. Remove the 4 bolts connecting the blower to the arm. (See Figure 34). Remove the 5 bolts which hold the burner arm in place. Pull the burner up and out. Clean the burner, if necessary, by blowing compressed air from the outside of the burner into the center of the burner, and wipe the inside of the burner clean with glass cleaner. A dirty burner may be an indication of improper combustion or dirty combustion air. Determine the cause of the problem, and correct it. If the burner gasket is damaged, replace it when replacing the burner.

Note - When installing the burner, make sure the flange is aligned with the mating surface, as each is keyed to control fit.

11.2.2 Modulating Gas Valve/ Venturi

The modulating gas valve consists of a valve body that incorporates the On/Off gas flow control and a negative pressure regulator. It provides the air/ gas ratio control in combination with the Venturi to the unit. It is designed to operate with gas supply pressure between 4 and 13 inches w.c.. To remove the gas valve and or Venturi, shut off the 120 Volt

power supply to the boiler. Turn off all manual gas valves connecting the boiler to the main gas supply line. Remove the front door of the boiler to gain access to the gas valve and Venturi. Disconnect the four flange bolts connecting the gas manifold pipe to the gas valve. Remove the electrical connections to the gas valve. Remove the bolts connecting the Venturi flange to the blower. This allows the entire gas valve/Venturi assembly to be removed as an assembly to facilitate inspection and cleaning.

After the valve has been removed, reassemble in reverse order making sure to include all gaskets and O-rings. Turn on the manual gas valves and check for gas leaks. Turn on the 120 Volt power. Place the unit in operation following the instructions in Section 10. Once the boiler is operating, check for leaks again and confirm all fasteners are tight.

Check the setup for the unit according to the instructions in Section 9.

11.2.3 Controllers

Each NeoTherm LC has two integrated controllers that incorporate manual reset high limit control, operating temperature control, modulating control, ignition control, outdoor reset control, pump control and many other features. If any of these features are thought to be defective, please consult the factory for proper troubleshooting practices before replacing a control.

If it is necessary to replace a controller, turn off all power to the unit and shut off all manual gas valves to the unit. Remove the front door to the unit and the control panel plastic bezel. Remove all wire connections from the control board. The control board connections are keyed to only allow connection in the proper location, but proper handling techniques should be used to avoid damage to the wiring or connectors. To remove the control, undo the mounting screws. To replace the control repeat the steps listed above in the reverse order making sure to connect all wires in the proper locations. Place the unit in operation following the steps outlined in Section 10.

11.2.4 Ignitor Assembly

The ignitor assembly is a two rod system that consists of a ground rod and a sense rod. To remove the ignitor assembly, shut off the 120 Volt power supply to the unit. Turn off all manual gas valves connecting the unit to the main gas supply line. Remove the front door of the boiler to gain access to the ignitor assembly. Remove the two wires connected to the assembly. Then remove the two bolts connecting the ignitor assembly to the burner door. Remove and replace the old ignitor assembly gasket. If the old assembly is determined to be defective, install a new ignitor assembly in the reverse order. Replace the gasket if necessary.

11.2.5 Flame Sensor

The flame sensor is a single rod system. To replace the flame sensor electrode, shut off the 120 Volt power supply to the boiler. Turn off all manual gas valves connecting the boiler to the main gas supply line. Remove the front door of the boiler to gain access to the flame sensor electrode. Remove the flame sensor wire from the electrode. Remove the two bolts fastening the electrode to the burner doors. Remove and replace the old flame sensor gasket. If the old electrode is determined to be defective, reinstall a new flame sensor electrode in the reverse order.

⚠ Caution

The igniters and sensors get become very hot. If you touch these parts accidentally, this can cause burns or injury.

11.2.6 Transformer with Integral Circuit Breaker

The appliance has a 24 VAC transformer with integral 4 amp circuit breaker installed for supplying the control voltage required for the unit only. The transformer is sized for the load produced by the unit only and should not be used to supply power to additional field devices. If additional loads are added or a short occurs during installation, the integral circuit breaker may trip. If this happens, be sure to reset the circuit breaker before replacing the transformer.

If the transformer must be replaced, turn off the 120 VAC power to the unit. Remove the transformer wires from the terminal blocks. Remove the fasteners holding the transformer, and remove the transformer. Replace with a new transformer in reverse order.

If the transformer is replaced with a part other than the OEM transformer, be sure to add circuit protection if it is not integral to the new transformer.

⚠ WARNING

Failure to include proper circuit protection may lead to premature component failure, fire, injury or death.

11.2.7 Blower

The combustion air blower is a high-pressure centrifugal blower with a variable speed motor. The speed of the motor is determined by the control logic. 120 Volts are supplied to the blower at all times.

If it is necessary to replace the blower, turn off the 120 Volt power and the gas supply to the unit. Take the front panel off. Disconnect the 120 Volt and control signal connections to the blower. Disconnect the bolts connecting the Venturi to the blower housing. Disconnect the fan outlet bolts from the burner door blower arm. If the fan is determined to be defective replace the existing fan with a new one reversing the steps listed above. Be sure to install all of the required O-rings and gaskets between the blower arm and the blower and blower face and Venturi flange.

11.2.8 Heat Exchanger Coils

Black carbon soot buildup on the external surfaces of the heat exchanger is caused by one or more of the following; incomplete combustion, combustion air problems, venting problems or heater short cycling. Soot buildup or other debris on the heat exchanger may restrict the flue passages.

If black carbon soot buildup on the heat exchanger is suspected, disconnect the electrical supply to the unit, and turn off the gas supply by closing the manual gas valve on the unit. Access the heat exchanger through the burner door at the front of the boiler, and inspect the tubing using a flashlight. If there is a buildup of black carbon soot or other debris on the heat exchanger, clean per the following:

⚠ Caution

Black carbon soot buildup on a dirty heat exchanger can be ignited by a random spark or flame. To prevent this from happening, dampen the soot deposits with a wet brush or fine water spray before servicing the heat exchanger.

1. Shut off the 120 Volt power supply to the boiler.
2. Turn off all manual gas valves connecting the boiler to the main gas supply line.
3. Remove the nuts located on the outside diameter of the burner door to the heat exchanger.
4. Remove the burner door/burner assembly from the heat exchanger.
5. Disconnect the condensate drain line.
6. Attach a longer hose to the drain and run it to a bucket.
7. Clean the heat exchanger by brushing away any light accumulations of soot and debris. Use a non metallic brush with soft bristles to avoid damaging the surfaces of the heat exchanger tubes.
8. Once the tubes have been brushed clean, rinse the tubes and combustion chamber with a small amount of water to rinse all of the debris out of the bottom of the flue collector and into the longer condensate trap line, which is being diverted into a separate container.

Note - The Warranty does not cover damage caused by lack of required maintenance, lack of water flow, or improper operating practices.

⚠ WARNING

Failure to rinse the debris from the heat exchanger and temporary drain line may lead to clogged condensate lines, traps and neutralizers. Condensate pumps (if used) may also be damaged from the debris left behind, possibly causing property damage.

9. To place the unit back in operation, install all removed components in the reverse order. Be sure all gaskets are in place as the components are installed. Replace any damaged gaskets. Do ***not*** reuse damaged gaskets.
10. Place the appliance in operation according to Section 9, checking all gas connections for leaks. Confirm all fasteners are tight.

11.2.9 Gas Pressure Switches (optional)

The high and low gas pressure switches are 24V manual reset switches that act to cut power to the gas valves if the gas pressure is too low or too high for proper operation. The gas pressure switches used are integrally vent limited, and do not require venting to atmosphere. To remove a switch, remove the screw on the plastic housing and pull the clear cover off. Disconnect the two wires from the screw terminals. Twist the switch off the pipe nipple. Reassemble in reverse order. For natural gas, set the low gas pressure switch to 3” w.c. For propane, set the low gas pressure switch to 5” w.c. For natural and propane, set the high gas pressure switch to 14.”

11.2.10 Natural/Propane Gas Conversion

NeoTherm LC's can easily be converted from natural to propane gas or from propane to natural gas. If a gas conversion is performed, the unit must be identified with the appropriate gas labels and a conversion sticker to allow technicians performing maintenance in the future to properly identify the gas type of the appliance.

NT size (mbtu)	Kit Number
1000	CA006207
1700	CA006207

Table 18 - Gas Conversion Kit

11.2.11 Condensate Trap

A condensate drain trap is included with the NeoTherm LC and is designed to drain the boiler of condensate. The vent condensate should be drained through a drain tee located in the vent line. This will help prevent excessive condensate from entering the boiler condensate trap and preventing the boiler from operating.

Connect a 3/4" PVC pipe between the drain connection and a floor drain (or condensate pump if a floor drain is not accessible).

The condensate drain must be installed to prevent the accumulation of condensate. When a condensate pump is not used, the tubing must continuously slope downward toward the drain with no spiraling.

Consult local codes for the disposal method.

⚠ Caution

Condensate is mildly acidic (pH=5), and may harm some floor drains and/or pipes, particularly those that are metal. Ensure that the drain, drainpipe, and anything that will come in contact with the condensate can withstand the acidity, or neutralize the condensate before disposal. **Damage caused by failure to install a neutralizer kit or to adequately treat condensate will not be the manufacturer's responsibility.**

11.2.12 Battery (Date and Time Back-Up for Touchscreen Display)

The touchscreen does have an internal battery for back-up of the date and time settings. To access the battery, the front panel and the touch screen display must be removed so that the small plastic door on the back of the touchscreen can be accessed.

The battery is a CR2032 'coin type' battery and has an expected shelf life of 10 years.

Section 12
TROUBLESHOOTING

12.1 Potential Setup and Synchronization Problems

Because the NeoTherm LC uses a sophisticated control system, it can constantly perform a series of self-checks. For example, as a burner is lighted, the controller checks each stage of the purge and ignition process. If part of the process does not happen on time, or takes too long to occur, the controller stops the process. We have detailed these self-checks in the section on "Operating Sequence."

Two of these self-checks are particularly important:

- Controller synchronization
- Flap valve status

If the control system is not satisfied with the results of both of these checks, it will not allow the system to run. Sometimes the reason for this may not be obvious at first – that's why we are describing them at the start of this section on Troubleshooting.

12.1.1 Controller Synchronization

On a multiple-boiler installation, the individual boiler controllers are arranged in a "daisy chain" using a Modbus connection, with the Secondary control of one boiler connected to the Primary control of the next boiler. Up to four boilers, with up to eight controllers, can be connected in this way. See Fig. 122.

As part of the setup process, each of these controllers must be given a unique address. (For details, see Section 9 - Installation and Setup." The controls must be set up and addressed correctly before the Modbus wiring is completed. If the wiring is attached before the Modbus control addresses are changed, there will be multiple controls with the same address, and ***the system will not work.***

When a Lead/Lag system is first powered up, the controller acting as the Lead/Lag Master goes through a "synchronization" process. During synchronization, the controller establishes communications with each of the Slave controllers via the Modbus link. The Slave controllers download some setup parameters and operating history information. (On a system with several boilers, this phase can take several minutes.) If the Master cannot establish communications with one of the Slaves, it triggers a Hold or Lockout.

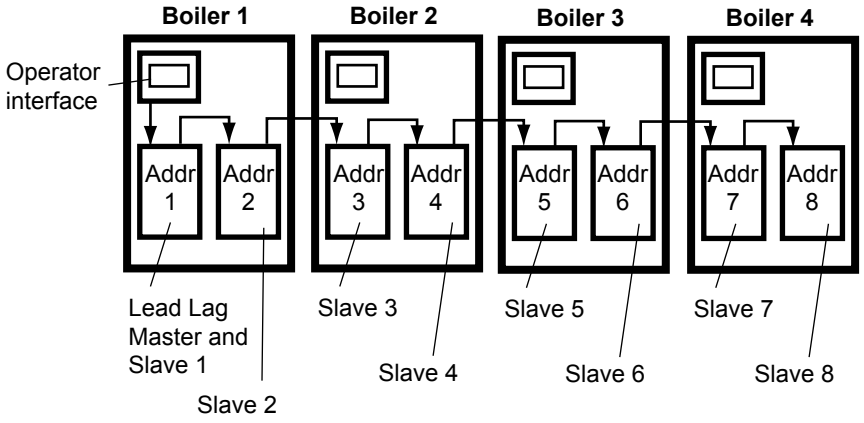

Fig. 122 – Lead/Lag Arrangement in a Multiple-Boiler Installation

12.1.2 Flap Valve Status Check

Each boiler includes two burners, and each burner has a flap valve. See Fig. 123.

If one burner in a boiler is operating, and the other is not, the flap valve for the burner that is off will remain closed to prevent air from moving backwards through the burner that is not operating. Before the Lead/Lag Master controller will allow the system to operate, it must be able to determine whether each of these flap valves is open or closed. If the controller cannot find a signal from one of the flap valves, the control system will act to prevent backflow by energizing the blower of the control with the bad flap valve. If this cannot be done ***the control will not allow the whole system to run.*** If the flap valve identifications are not set correctly, the control system will present a "HOLD 119 – Control Interaction Fault" on the display. For this reason, it is important that all of the flap valves be identified correctly.

12.2 About Lockouts, Holds, and Alerts

The control system on the NeoTherm LC responds to three kinds of trouble indications:

- A "lockout" is caused by a serious problem that might involve a safety issue. Once the controller enters a lockout, the burners will shut down, and will not be allowed to run again until the cause of the problem is corrected, and you reset the control system. The controller will also trigger a lockout if you change a safety-related parameter, but do not finish the "verification" process. (For more information on verification, see Section 8.8)

  During a lockout condition, the image of the affected controller on the 'home' screen will appear in red. A bell symbol will appear in the upper left-hand corner of the control screen. The system maintains a "history" of the 15 most recent lockouts.
- The system may enter a "hold" for a period of time before locking out. This allows the controller to see if the error becomes resolved prior to the hard lockout. Holds can occur while the boiler is operating.
- An "alert" indicates that some feature of the control system's operation was not correct, delayed or waiting for a response. This indicates a change in state of the control system and doesn't necessarily mean there is a problem. For example, Alerts occur as the fan speed transitions from the pre-purge RPM to the startup RPM. This indicates that the control system is waiting for a condition to be satisfied. No Reset is required to recover from an alert. The system maintains a "history" of the 15 most recent alerts. Sometimes it can be helpful to check this list as a troubleshooting aid.

12.2.1 Responding to a Lockout, Hold, or Alert

1. If a problem occurs while the system is starting up, the system will declare a Hold. A brief explanation of the cause of the Hold will appear in an orange bar across the bottom of the screen. If you tap the orange bar, the system will present more information about the Hold.

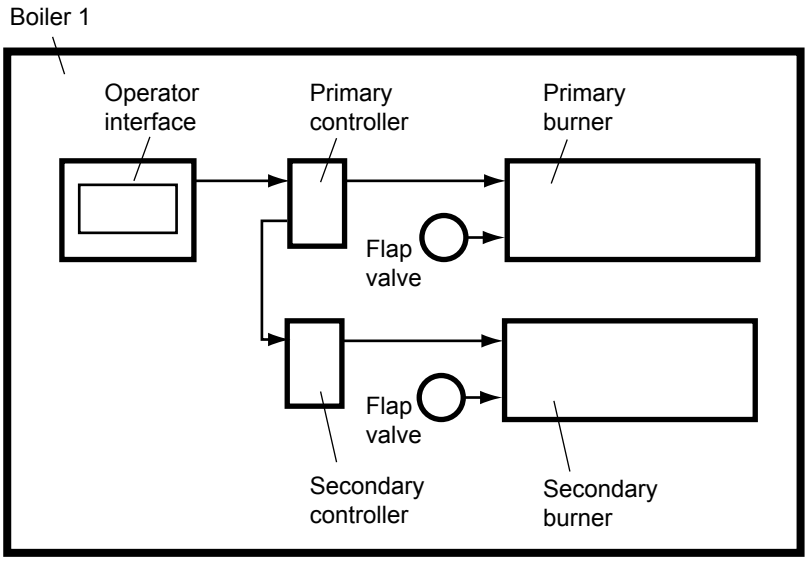

Fig. 123 - Flap Valve Arrangement

Correct the cause of the problem, and press the button on the screen to clear the Hold.

2. If a serious problem continues, the system will declare a Lockout. A brief explanation of the cause of the Lockout will appear in an orange bar across the bottom of the screen. If you tap the orange bar, the system will present more information about the Lockout.

   Correct the cause of the problem, and press the Reset button.

3. If an Alert occurs while the system is running, the system will present a note across the bottom of the screen. If you tap the orange bar, the system will present more information about the Alert.

   Press the OK button to indicate that you have seen the Alert.

4. If an audible alarm on the display is active, you can use the Silence button to stop it.

12.2.2 Viewing the Lockout and Alert Histories

1. To view the Lockout history, start at the 'home' screen (Fig. 124).

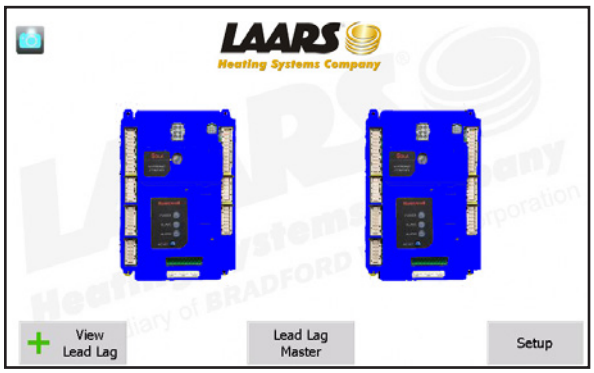

Fig. 124 – 'home' screen

2. Press the Lead/ Lag Master button. Figure 125 shows the Lead/ Lag Master screen.

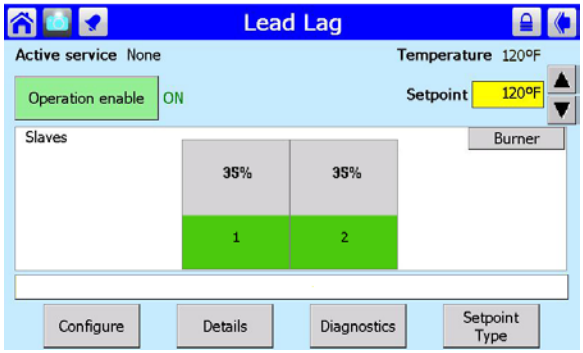

Fig. 125 – Lead/ Lag Master Screen

3. If you press the Details button, the control software will present a screen similar to this (Fig. 126).

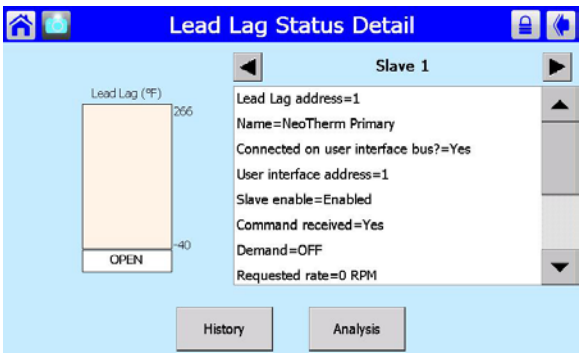

Fig. 126 – Typical Details Screen

4. To see a record of the recent lockouts and alerts, press the History button. The system will present the Lockout History screen (Fig. 127).

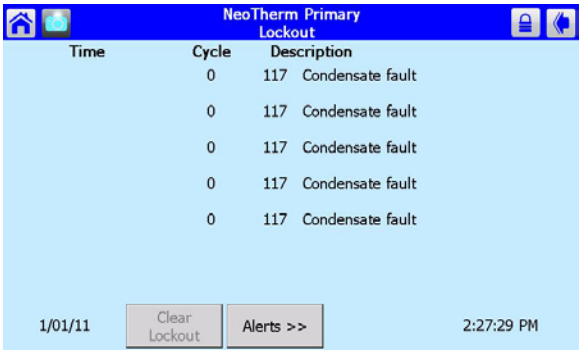

Fig. 127 – Lockout History Screen

The most recent lockouts appear at the top of the list. Any lockout that has not been cleared will appear in red.

5. You can see more detailed information on any lockout by touching the entry on the screen.

   Correct the cause of the problem, then press Clear Lockout to clear the lockout.

6. You can also press the Alerts button to see a list of recent alerts. See Fig. 128.

Note – The Alert Log only lists the ***most recent*** occurrence for each type of alert.

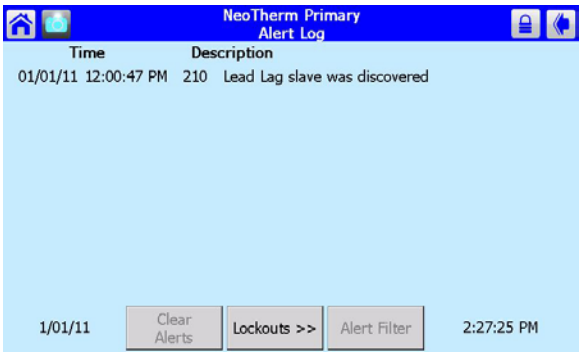

Fig. 128 – Alert Log Screen

To get more information on a particular alert, touch the entry for that alert on the screen.

12.3 Troubleshooting Table

This table includes a listing of the faults that might be generated by the controllers, and displayed on the Touch Screen. Some of these can be corrected by an installer changing a parameter, while other conditions are more complicated, and will require a service technician.

The first column lists the code number that will appear at the beginning of the Lockout or Hold message in the orange bar at the bottom of the screen. The second column lists the text as it will appear on the Touch Screen. The third column shows whether the condition will cause a Hold, or Lockout, or both. The fourth column lists some suggestions for corrective action.

Code	Description	L or H	Procedure
1	Unconfigured safety data	L	1. New device, complete device configuration and safety verification. 2. If fault repeats, replace module
2	Waiting for safety data verification	L	1. Device in Configuration mode and safety parameters need verification and a device needs reset to complete verification. 2. Configuration ended without verification, re enter configuration, verify safety parameters and reset device to complete verification. 3. If fault repeats, replace module.
3	Internal fault: Hardware fault	H	Internal fault 1. Reset module 2. If fault repeats, replace module.
4	Internal fault: Safety Relay key feedback error	H	Internal fault 1. Reset module 2. If fault repeats, replace module.
5	Internal fault: Unstable power (DC DC) output	H	Internal fault 1. Reset module 2. If fault repeats, replace module.
6	Internal fault: Invalid processor clock	H	Internal fault 1. Reset module 2. If fault repeats, replace module.
7	Internal fault: Safety relay drive error	H	Internal fault 1. Reset module 2. If fault repeats, replace module.
8	Internal fault: Zero crossing not detected	H	Internal fault 1. Reset module 2. If fault repeats, replace module.
9	Internal fault: Flame bias out of range	H	Internal fault 1. Reset module 2. If fault repeats, replace module.
10	Internal fault: Invalid burner control state	L	Internal fault 1. Reset module 2. If fault repeats, replace module.

Code	Description	L or H	Procedure
11	Internal fault: Invalid burner control state flag	L	Internal fault 1. Reset module 2. If fault repeats, replace module.
12	Internal fault: Safety relay drive cap short	H	Internal fault 1. Reset module 2. If fault repeats, replace module.
13	Internal fault: PII (Pre-Ignition Interlock) shorted to ILK (Interlock)	H or L	Internal fault 1. Reset module 2. If fault repeats, replace module.
15	Internal fault: Safety relay test failed due to feedback ON	L	Internal fault 1. Reset module 2. If fault repeats, replace module.
16	Internal fault: Safety relay test failed due to safety relay OFF	L	Internal fault 1. Reset module 2. If fault repeats, replace module.
17	Internal fault: Safety relay test failed due to safety relay not OFF	L	Internal fault 1. Reset module 2. If fault repeats, replace module.
18	Internal fault: Safety relay test failed due to feedback not ON	L	Internal fault 1. Reset module 2. If fault repeats, replace module.
19	Internal fault: Safety RAM write	L	Internal fault 1. Reset module 2. If fault repeats, replace module.
20	Internal fault: Internal fault: Flame ripple and overflow	H	Internal fault 1. Reset module 2. If fault repeats, replace module.
21	Internal fault: Flame number of sample mismatch	H	Internal fault 1. Reset module 2. If fault repeats, replace module.
22	Internal fault: Flame bias out of range	H	Internal fault 1. Reset module 2. If fault repeats, replace module.
23	Internal fault: Bias changed since heating cycle starts	H	Internal fault 1. Reset module 2. If fault repeats, replace module.
24	Internal fault: Spark voltage stuck low or high	H	Internal fault 1. Reset module 2. If fault repeats, replace module.
25	Internal fault: Spark voltage changed too much during flame sensing time	H	Internal fault 1. Reset module 2. If fault repeats, replace module.

Code	Description	L or H	Procedure
26	Internal fault: Static flame ripple	H	Internal fault 1. Reset module 2. If fault repeats, replace module.
27	Internal fault: Flame rod shorted to ground detected	H	Internal fault 1. Reset module 2. If fault repeats, replace module.
28	Internal fault: A/D linearity test fails	H	Internal fault 1. Reset module 2. If fault repeats, replace module.
29	Internal fault: Flame bias cannot be set in range	H	Internal fault 1. Reset module 2. If fault repeats, replace module.
30	Internal fault: Flame bias shorted to adjacent pin	H	Internal fault 1. Reset module 2. If fault repeats, replace module.
31	Internal fault: SLO electronics unknown error	H	Internal fault 1. Reset module 2. If fault repeats, replace module.
32-46	Internal fault: Safety Key 0 through 14	L	Internal fault 1. Reset module 2. If fault repeats, replace module.
47	Flame Rod to ground leakage	H	Internal fault 1. Reset module 2. If fault repeats, replace module.
48	Static flame (not flickering)	H	Internal fault 1. Reset module 2. If fault repeats, replace module.
49	24 VAC voltage low/high	H	1. Check the module and display connections. 2. Check the module power supply and make sure that frequency, voltage and VA meet the specifications.
50	Modulation fault	H	Internal sub-system fault. 1. Review alert messages for possible trends. 2. Correct possible problems.
51	Pump fault	H	Internal sub-system fault. 1. Review alert messages for possible trends. 2. Correct possible problems.
52	Motor tachometer fault	H	Internal sub-system fault. 1. Review alert messages for possible trends. 2. Correct possible problems.

Code	Description	L or H	Procedure
53	AC input phases reversed	L	1. Check the module and display connections. 2. Check the module power supply and make sure that both frequency and voltage meet the specifications. 3. On 24 VAC applications, assure that J4 terminal 10 and J8 terminal 2 are connected together.
59	Internal Fault: Mux pin shorted	L	Internal Fault. 1. Reset module. 2. If fault repeats, replace module.
61	Anti short cycle	H	Will not be a lockout fault. Hold Only.
62	Fan speed not proved	H	Will not be a lockout fault. Hold Only.
63	LCI (Limit Control Input) OFF	H	1. Check wiring and correct any faults. 2. Check Interlocks connected to the LCI to assure proper function. 3. Reset and sequence the module; monitor the LCI status. 4. If code persists, replace the module
64	PII (Pre-Ignition Interlock) OFF	H or L	1. Check wiring and correct any faults. 2. Check Preignition Interlock switches to assure proper functioning. 3. Check the valve operation. 4. Reset and sequence the module; monitor the PII status. 5. If code persists, replace the module.
67	ILK (Interlock) OFF	H or L	1. Check wiring and correct any possible shorts. 2. Check Interlock (ILK) switches to assure proper function. 3. Verify voltage through the interlock string to the interlock input with a voltmeter. 4. If steps 1-3 are correct and the fault persists, replace the module.
68	ILK (Interlock) ON	H or L	1. Check wiring and correct any possible shorts. 2. Check Interlock (ILK) switches to assure proper function. 3. Verify voltage through the interlock string to the interlock input with a voltmeter. 4. If steps 1-3 are correct and the fault persists, replace the module.
70	Wait for leakage test completion	H	1. Internal Fault. Reset module. 2. If fault repeats, replace module.
78	Demand Lost in Run	H	1. Check wiring and correct any possible errors. 2. If previous steps are correct and fault persists, replace the module.

Code	Description	L or H	Procedure
79	Outlet high limit	H or L	1. Check wiring and correct any possible errors. 2. Replace the outlet high limit. 3. If previous steps are correct and fault persists, replace the module.
80	DHW (Domestic Hot Water) high limit	H or L	1. Check wiring and correct any possible errors. 2. Replace the DHW high limit. 3. If previous steps are correct and fault persists, replace the module.
81	Delta T limit	H or L	1. Check inlet and outlet sensors and pump circuits for proper operation. 2. Recheck the Delta T Limit to confirm proper setting. 3. If previous steps are correct and fault persists, replace the module.
82	Stack limit	H or L	1. Check wiring and correct any possible errors. 2. Replace the Stack high limit. 3. If previous steps are correct and fault persists, replace the module.
91	Inlet sensor fault	H	1. Check wiring and correct any possible errors. 2. Replace the Inlet sensor. 3. If previous steps are correct and fault persists, replace the module.
92	Outlet sensor fault	H	1. Check wiring and correct any possible errors. 2. Replace the Outlet sensor. 3. If previous steps are correct and fault persists, replace the module.
93	DHW (Domestic Hot Water) sensor fault	H	1. Check wiring and correct any possible errors. 2. Replace the DHW sensor. 3. If previous steps are correct and fault persists, replace the module.
94	Header sensor fault	H	1. Check wiring and correct any possible errors. 2. Replace the header sensor. 3. If previous steps are correct and fault persists, replace the module.
95	Stack sensor fault	H	1. Check wiring and correct any possible errors. 2. Replace the stack sensor. 3. If previous steps are correct and fault persists, replace the module.
96	Outdoor sensor fault	H	1. Check wiring and correct any possible errors. 2. Replace the outdoor sensor. 3. If previous steps are correct and fault persists, replace the module.

Code	Description	L or H	Procedure
97	Internal Fault: A2D mismatch.	L	Internal Fault. 1. Reset module. 2. If fault repeats, replace module.
98	Internal Fault: Exceeded VSNSR voltage tolerance	L	Internal Fault. 1. Reset module. 2. If fault repeats, replace module.
99	Internal Fault: Exceeded 28V voltage tolerance	L	Internal Fault. 1. Reset module. 2. If fault repeats, replace module.
100	Pressure Sensor Fault	H	1. Verify the Pressure Sensor is a 4-20 ma source. 2. Check wiring and correct any possible errors. 3. Test Pressure Sensor for correct operation. 4. Replace the Pressure sensor. 5. If previous steps are correct and fault persists, replace the module.
105	Flame detected out of sequence	H or L	1. Check that flame is not present in the combustion chamber. Correct any errors. 2. Make sure that the flame detector is wired to the correct terminal. 3. Make sure the F & G wires are protected from stray noise pickup. 4. Reset and sequence the module, if code reappears, replace the flame detector. 5. Reset and sequence the module, if code reappears, replace the module.
106	Flame lost in MFEP	L	1. Check main valve wiring and operation - correct any errors. 2. Check the fuel supply. 3. Check fuel pressure and repeat turndown tests. 4. Check ignition transformer electrode, flame detector, flame detector siting or flame rod position. 5. If steps 1 through 4 are correct and the fault persists, replace the module.
107	Flame lost early in run	L	1. Check main valve wiring and operation - correct any errors. 2. Check the fuel supply. 3. Check fuel pressure and repeat turndown tests. 4. Check ignition transformer electrode, flame detector, flame detector siting or flame rod position. 5. If steps 1 through 4 are correct and the fault persists, replace the module.

Code	Description	L or H	Procedure
108	Flame lost in run	L	1. Check main valve wiring and operation - correct any errors. 2. Check the fuel supply. 3. Check fuel pressure and repeat turndown tests. 4. Check ignition transformer electrode, flame detector, flame detector siting or flame rod position. 5. If steps 1 through 4 are correct and the fault persists, replace the module.
109	Ignition failed	L	1. Check main valve wiring and operation - correct any errors. 2. Check the fuel supply. 3. Check fuel pressure and repeat turndown tests. 4. Check ignition transformer electrode, flame detector, flame detector siting or flame rod position. 5. If steps 1 through 4 are correct and the fault persists, replace the module.
110	Ignition failure occurred	H	Hold time of recycle and hold option. Will not be a lockout fault. Hold Only. Internal hardware test. Not a lockout.
111	Flame current lower than weak threshold	H	Hold time of recycle and hold option. Will not be a lockout fault. Hold Only. Internal hardware test. Not a lockout.
113	Flame circuit timeout	L	Flame sensed during Initiate or off cycle, hold 240 seconds, if present after 240 seconds, system will lockout.
119	Control Interaction Fault	H	Flap valve identifications configured incorrectly.
122	Lightoff rate proving failed	L	1. Check wiring and correct any potential wiring errors. 2. Check VFD's (Variable-speed Fan Drive) ability to change speeds. 3. Change the VFD 4. If the fault persists, replace the module.
123	Purge rate proving failed	L	1. Check wiring and correct any potential wiring errors. 2. Check VFD's (Variable-speed Fan Drive) ability to change speeds. 3. Change the VFD 4. If the fault persists, replace the module.
128	Fan speed failed during prepurge	H or L	1. Check wiring and correct any potential wiring errors. 2. Check the VFDs (Variable-speed Fan Drive) ability to change speeds. 3. Change the VFD 4. If the fault persists, replace the module.

Code	Description	L or H	Procedure
129	Fan speed failed during preignition	H or L	1. Check wiring and correct any potential wiring errors. 2. Check the VFDs (Variable-speed Fan Drive) ability to change speeds. 3. Change the VFD 4. If the fault persists, replace the module.
130	Fan speed failed during ignition	H or L	1. Check wiring and correct any potential wiring errors. 2. Check the VFDs (Variable-speed Fan Drive) ability to change speeds. 3. Change the VFD 4. If the fault persists, replace the module.
131	Fan movement detected during standby	H	1. Check wiring and correct any potential wiring errors. 2. Check the VFDs (Variable-speed Fan Drive) ability to change speeds. 3. Change the VFD 4. If the fault persists, replace the module.
132	Fan speed failed during run	H	1. Check wiring and correct any potential wiring errors. 2. Check the VFDs (Variable-speed Fan Drive) ability to change speeds. 3. Change the VFD 4. If the fault persists, replace the module.
137	ILK (Interlock) failed to close	H	1. Check wiring and correct any possible shorts. 2. Check Interlock (ILK) switches to assure proper function. 3. Verify voltage through the interlock string to the interlock input with a voltmeter. 4. If steps 1-3 are correct and the fault persists, replace the module.
149	Flame detected	H or L	Holds if flame detected during Safe Start check up to Flame Establishing period.
150	Flame not detected	H	Sequence returns to standby and restarts sequence at the beginning of Purge after the HF switch opens if flame detected during Safe Start check up to Flame Establishing period.
154	Purge Fan switch On	H or L	1. Purge fan switch is on when it should be off. 2. Check wiring and correct any errors. 3. Inspect the Purge Fan switch J6 terminal 3 and its connections. Make sure the switch is working correctly and is not jumpered or welded. 4. Reset and sequence the relay module. 5. If the fault persists, replace the relay module.

Code	Description	L or H	Procedure
155	Purge fan switch OFF	H or L	1. Purge fan switch is off when it should be on. 2. Check wiring and correct any errors. 3. Inspect the Purge Fan switch J6 terminal 3 and its connections. Make sure the switch is working correctly and is not jumpered or welded. 4. Reset and sequence the relay module. 5. If the fault persists, replace the relay module.
156	Combustion pressure and flame ON	H or L	1. Check that flame is not present in the combustion chamber. Correct any errors. 2. Make sure that the flame detector is wired to the correct terminal. 3. Make sure the F & G wires are protected from stray noise pickup. 4. Reset and sequence the module, if code reappears, replace the flame detector. 5. Reset and sequence the module, if code reappears, replace the module.
157	Combustion pressure and flame OFF	L	1. Check that flame is not present in the combustion chamber. Correct any errors. 2. Make sure that the flame detector is wired to the correct terminal. 3. Make sure the F & G wires are protected from stray noise pickup. 4. Reset and sequence the module, if code reappears, replace the flame detector. 5. Reset and sequence the module, if code reappears, replace the module.
158	Main valve ON	L	1. Check Main Valve terminal wiring and correct any errors. 2. Reset and sequence the module. If fault persists, replace the module.
159	Main valve OFF	L	1. Check Main Valve terminal wiring and correct any errors. 2. Reset and sequence the module. If fault persists, replace the module.
160	Ignition ON	L	1. Check Ignition terminal wiring and correct any errors. 2. Reset and sequence the module. If fault persists, replace the module.
161	Ignition OFF	L	1. Check Ignition terminal wiring and correct any errors. 2. Reset and sequence the module. If fault persists, replace the module.

Code	Description	L or H	Procedure
164	Block intake ON	L	1. Check wiring and correct any errors. 2. Inspect the Block Intake Switch to make sure it is working correctly. 3. Reset and sequence the module. 4. During Standby and Purge, measure the voltage across the switch. Supply voltage should be present. If not, the Block Intake Switch is defective and needs replacing. 5. If the fault persists, replace the relay module.
165	Block intake OFF	L	1. Check wiring and correct any errors. 2. Inspect the Block Intake Switch to make sure it is working correctly. 3. Reset and sequence the module. 4. During Standby and Purge, measure the voltage across the switch. Supply voltage should be present. If not, the Block Intake Switch is defective and needs replacing. 5. If the fault persists, replace the relay module.
172	Main relay feedback incorrect	L	Internal Fault. 1. Reset module. 2. If fault repeats, replace module.
174	Safety relay feedback incorrect	L	Internal Fault. 1. Reset module. 2. If fault repeats, replace module.
175	Safety relay open	L	Internal Fault. 1. Reset module. 2. If fault repeats, replace module.
176	Main relay ON at safe start check	L	Internal Fault. 1. Reset Module. 2. If fault repeats, replace module.
178	Safety relay ON at safe start check	L	Internal Fault. 1. Reset module. 2. If fault repeats, replace module.
184	Invalid BLOWER/ HSI output setting	L	1. Return to Configuration mode and recheck selected parameters, reverify and reset module. 2. If fault repeats, verify electrical grounding. 3. If fault repeats, replace module.
185	Invalid Delta T limit enable setting	L	1. Return to Configuration mode and recheck selected parameters, reverify and reset module. 2. If fault repeats, verify electrical grounding. 3. If fault repeats, replace module.
186	Invalid Delta T limit response setting	L	1. Return to Configuration mode and recheck selected parameters, reverify and reset module. 2. If fault repeats, verify electrical grounding. 3. If fault repeats, replace module.

Code	Description	L or H	Procedure
187	Invalid DHW (Domestic Hot Water) high limit enable setting	L	1. Return to Configuration mode and recheck selected parameters, reverify and reset module. 2. If fault repeats, verify electrical grounding. 3. If fault repeats, replace module.
188	Invalid DHW (Domestic Hot Water) high limit response setting	L	1. Return to Configuration mode and recheck selected parameters, reverify and reset module. 2. If fault repeats, verify electrical grounding. 3. If fault repeats, replace module.
189	Invalid flame sensor type setting	L	1. Return to Configuration mode and recheck selected parameters, reverify and reset module. 2. If fault repeats, verify electrical grounding. 3. If fault repeats, replace module.
192	Invalid igniter on during setting	L	1. Return to Configuration mode and recheck selected parameters, reverify and reset module. 2. If fault repeats, verify electrical grounding. 3. If fault repeats, replace module.
193	Invalid ignite failure delay setting	L	1. Return to Configuration mode and recheck selected parameters, reverify and reset module. 2. If fault repeats, verify electrical grounding. 3. If fault repeats, replace module.
194	Invalid ignite failure response setting	L	1. Return to Configuration mode and recheck selected parameters, reverify and reset module. 2. If fault repeats, verify electrical grounding. 3. If fault repeats, replace module.\
195	Invalid ignite failure retries setting	L	1. Return to Configuration mode and recheck selected parameters, reverify and reset module. 2. If fault repeats, verify electrical grounding. 3. If fault repeats, replace module.
196	Invalid ignition source setting	L	1. Return to Configuration mode and recheck selected parameters, reverify and reset module. 2. If fault repeats, verify electrical grounding. 3. If fault repeats, replace module.
197	Invalid interlock open response setting	L	1. Return to Configuration mode and recheck selected parameters, reverify and reset module. 2. If fault repeats, verify electrical grounding. 3. If fault repeats, replace module.
198	Invalid interlock start check setting	L	1. Return to Configuration mode and recheck selected parameters, reverify and reset module. 2. If fault repeats, verify electrical grounding. 3. If fault repeats, replace module.
199	Invalid LCI (Limit Control Input) enable setting	L	1. Return to Configuration mode and recheck selected parameters, reverify and reset module. 2. If fault repeats, verify electrical grounding. 3. If fault repeats, replace module.

Code	Description	L or H	Procedure
200	Invalid lightoff rate setting	L	1. Return to Configuration mode and recheck selected parameters, reverify and reset module. 2. If fault repeats, verify electrical grounding. 3. If fault repeats, replace module.
201	Invalid lightoff rate proving setting	L	1. Return to Configuration mode and recheck selected parameters, reverify and reset module. 2. If fault repeats, verify electrical grounding. 3. If fault repeats, replace module.
202	Invalid MFEP (Main Flame Establishing Period) time setting	L	1. Return to Configuration mode and recheck selected parameters, reverify and reset module. 2. If fault repeats, verify electrical grounding. 3. If fault repeats, replace module.
203	Invalid MFEP (Main Flame Establishing Period) flame failure response setting	L	1. Return to Configuration mode and recheck selected parameters, reverify and reset module. 2. If fault repeats, verify electrical grounding. 3. If fault repeats, replace module.
204	Invalid NTC sensor type setting	L	1. Return to Configuration mode and recheck selected parameters, reverify and reset module. 2. If fault repeats, verify electrical grounding. 3. If fault repeats, replace module.
205	Invalid Outlet high limit response setting	L	1. Return to Configuration mode and recheck selected parameters, reverify and reset module. 2. If fault repeats, verify electrical grounding. 3. If fault repeats, replace module.
207	Invalid PII (Pre-Ignition Interlock) enable setting	L	1. Return to Configuration mode and recheck selected parameters, reverify and reset module. 2. If fault repeats, verify electrical grounding. 3. If fault repeats, replace module.
210	Invalid Postpurge time setting	L	1. Return to Configuration mode and recheck selected parameters, reverify and reset module. 2. If fault repeats, verify electrical grounding. 3. If fault repeats, replace module.
211	Invalid Power up with lockout setting	L	1. Return to Configuration mode and recheck selected parameters, reverify and reset module. 2. If fault repeats, verify electrical grounding. 3. If fault repeats, replace module.
212	Invalid Preignition time setting	L	1. Return to Configuration mode and recheck selected parameters, reverify and reset module. 2. If fault repeats, verify electrical grounding. 3. If fault repeats, replace module.
213	Invalid Prepurge rate setting	L	1. Return to Configuration mode and recheck selected parameters, reverify and reset module. 2. If fault repeats, verify electrical grounding. 3. If fault repeats, replace module.

Code	Description	L or H	Procedure
214	Invalid Prepurge time setting	L	1. Return to Configuration mode and recheck selected parameters, reverify and reset module. 2. If fault repeats, verify electrical grounding. 3. If fault repeats, replace module.
215	Invalid Purge rate proving setting	L	1. Return to Configuration mode and recheck selected parameters, reverify and reset module. 2. If fault repeats, verify electrical grounding. 3. If fault repeats, replace module.
216	Invalid Run flame failure response setting	L	1. Return to Configuration mode and recheck selected parameters, reverify and reset module. 2. If fault repeats, verify electrical grounding. 3. If fault repeats, replace module.
217	Invalid Run stabilization time setting	L	1. Return to Configuration mode and recheck selected parameters, reverify and reset module. 2. If fault repeats, verify electrical grounding. 3. If fault repeats, replace module.
218	Invalid Stack limit enable setting	L	1. Return to Configuration mode and recheck selected parameters, reverify and reset module. 2. If fault repeats, verify electrical grounding. 3. If fault repeats, replace module.
219	Invalid Stack limit response setting	L	1. Return to Configuration mode and recheck selected parameters, reverify and reset module. 2. If fault repeats, verify electrical grounding. 3. If fault repeats, replace module.
220	Unconfigured Delta T limit setpoint setting	L	1. Return to Configuration mode and recheck selected parameters, reverify and reset module. 2. If fault repeats, verify electrical grounding. 3. If fault repeats, replace module.
221	Unconfigured DHW (Domestic Hot Water) high limit setpoint setting	L	1. Return to Configuration mode and recheck selected parameters, reverify and reset module. 2. If fault repeats, verify electrical grounding. 3. If fault repeats, replace module.
222	Unconfigured Outlet high limit setpoint setting	L	1. Return to Configuration mode and recheck selected parameters, reverify and reset module. 2. If fault repeats, verify electrical grounding. 3. If fault repeats, replace module.
223	Unconfigured Stack limit setpoint setting	L	1. Return to Configuration mode and recheck selected parameters, reverify and reset module. 2. If fault repeats, verify electrical grounding. 3. If fault repeats, replace module.
224	Invalid DHW (Domestic Hot Water) demand source setting	L	1. Return to Configuration mode and recheck selected parameters, reverify and reset module. 2. If fault repeats, verify electrical grounding. 3. If fault repeats, replace module.

Code	Description	L or H	Procedure
225	Invalid Flame threshold setting	L	1. Return to Configuration mode and recheck selected parameters, reverify and reset module. 2. If fault repeats, verify electrical grounding. 3. If fault repeats, replace module.
226	Invalid Outlet high limit setpoint setting	L	1. Return to Configuration mode and recheck selected parameters, reverify and reset module. 2. If fault repeats, verify electrical grounding. 3. If fault repeats, replace module.
227	Invalid DHW (Domestic Hot Water) high limit setpoint setting	L	1. Return to Configuration mode and recheck selected parameters, reverify and reset module. 2. If fault repeats, verify electrical grounding. 3. If fault repeats, replace module.
228	Invalid Stack limit setpoint setting	L	1. Return to Configuration mode and recheck selected parameters, reverify and reset module. 2. If fault repeats, verify electrical grounding. 3. If fault repeats, replace module.
229	Invalid Modulation output setting	L	1. Return to Configuration mode and recheck selected parameters, reverify and reset module. 2. If fault repeats, verify electrical grounding. 3. If fault repeats, replace module.
230	Invalid CH (Central Heat) demand source setting	L	1. Return to Configuration mode and recheck selected parameters, reverify and reset module. 2. If fault repeats, verify electrical grounding. 3. If fault repeats, replace module.
231	Invalid Delta T limit delay setting	L	1. Return to Configuration mode and recheck selected parameters, reverify and reset module. 2. If fault repeats, verify electrical grounding. 3. If fault repeats, replace module.
232	Invalid Pressure sensor type setting	L	1. Return to Configuration mode and recheck selected parameters, reverify and reset module. 2. If fault repeats, verify electrical grounding. 3. If fault repeats, replace module.
234	Invalid Outlet high limit enable setting	L	1. Return to Configuration mode and recheck selected parameters, reverify and reset module. 2. If fault repeats, verify electrical grounding. 3. If fault repeats, replace module.
235	Invalid Outlet connector type setting	L	1. Return to Configuration mode and recheck selected parameters, reverify and reset module. 2. If fault repeats, verify electrical grounding. 3. If fault repeats, replace module.
236	Invalid Inlet connector type setting	L	1. Return to Configuration mode and recheck selected parameters, reverify and reset module. 2. If fault repeats, verify electrical grounding. 3. If fault repeats, replace module.

Code	Description	L or H	Procedure
237	Invalid DHW (Domestic Hot Water) connector type setting	L	1. Return to Configuration mode and recheck selected parameters, reverify and reset module. 2. If fault repeats, verify electrical grounding. 3. If fault repeats, replace module.
238	Invalid Stack connector type setting	L	1. Return to Configuration mode and recheck selected parameters, reverify and reset module. 2. If fault repeats, verify electrical grounding. 3. If fault repeats, replace module.
239	Invalid Header connector type setting	L	1. Return to Configuration mode and recheck selected parameters, reverify and reset module. 2. If fault repeats, verify electrical grounding. 3. If fault repeats, replace module.
240	Invalid Outdoor connector type setting	L	1. Return to Configuration mode and recheck selected parameters, reverify and reset module. 2. If fault repeats, verify electrical grounding. 3. If fault repeats, replace module.

12.4 Diagnostic Tests and Input/ Output Indicators

Two kinds of screens are grouped together in this section:

- Detailed indications of the input and output signals
- Diagnostic tests of the pumps and burner modulation

Note that these functions apply to just one selected controller.

How to get there –

Home Page <Select icon> Status Summary Screen <Diagnostics button>

1. The buttons at the bottom of the screen select the types of inputs and outputs displayed. The Burner Control I/O button leads to Fig. 129.

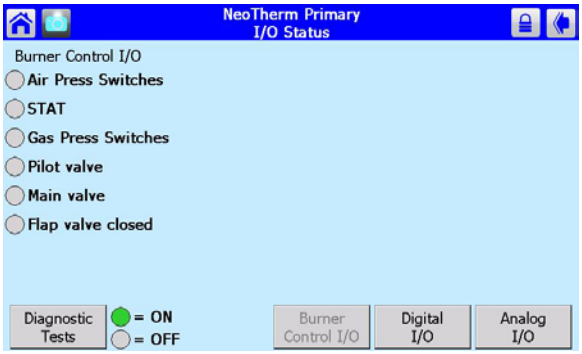

Fig. 129 - Burner Control I/O Screen

A green dot indicates a function that is "on."

2. Press the Digital I/O button to look at functions where the functions are either "on" of "off." See Fig. 130.

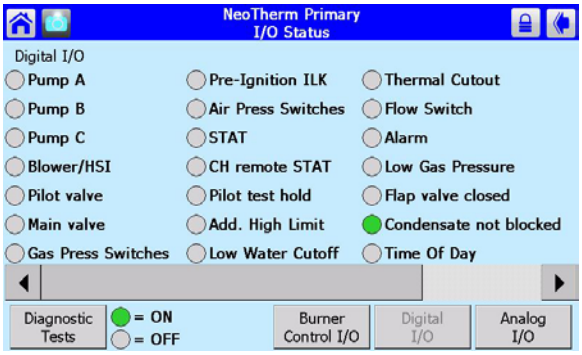

Fig. 130 – Digital I/O Screen

3. The button for Analog I/O displays items that change continuously between two limits. See Fig. 131.

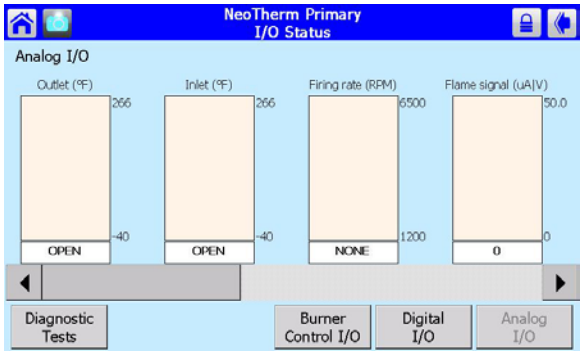

Fig. 131 - Analog I/O Screen

4. Press the button for Diagnostic Tests. The Modulation test allows you to change the rate at which the burner fires, and watch the results. See Fig. 132.

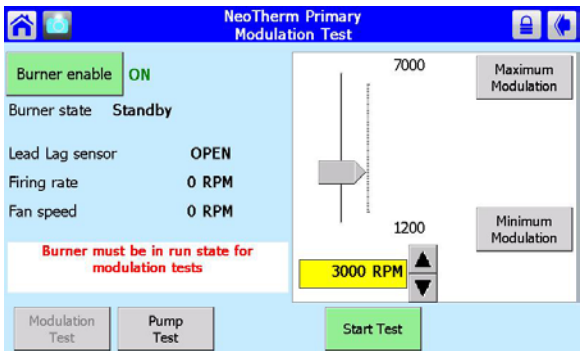

Fig. 132 – Modulation Test

5. Press the Pump Test button. The Pump test shows detailed information on the activity of the three pumps that may be used by the system.

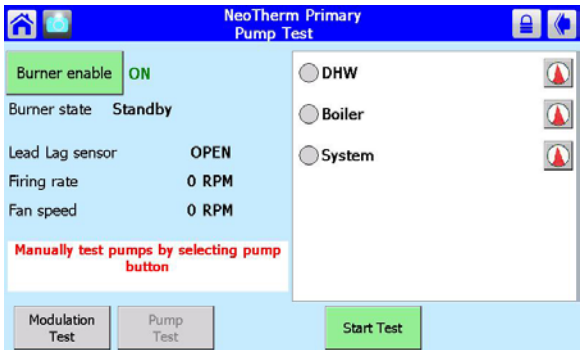

Fig. 133 – Pump Test

12.5 Lead/Lag Slave Diagnostics

The control system includes a diagnostic screen that lists some information on the Lead/Lag slaves in the system. See Fig. 134.

How to get there –

Home Page <View Lead Lag button> Lead Lag Screen <Lead Lag Master button> Lead Lag Screen <Diagnostics button> Lead Lag Slave Status Screen

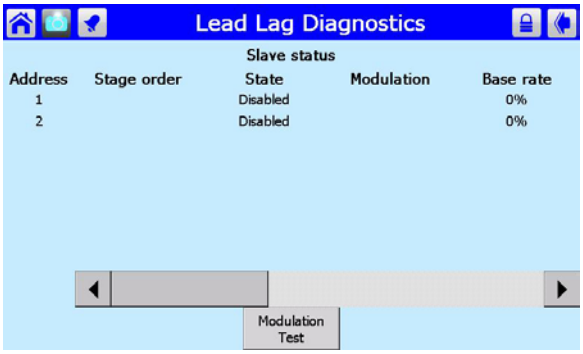

Fig. 134 - Lead/Lag Diagnostics

Use the left- and right-arrows to see all of the columns in the display.

12.6 Statistics

The controller can present some summary information about the operation of the system – number of pump cycles, number of burner cycles, etc.

How to get there –

Home Page <Select icon> Status Summary Screen <Configure button> Configuration Menu <Select Statistics Configuration line> Statistics Configuration Screen

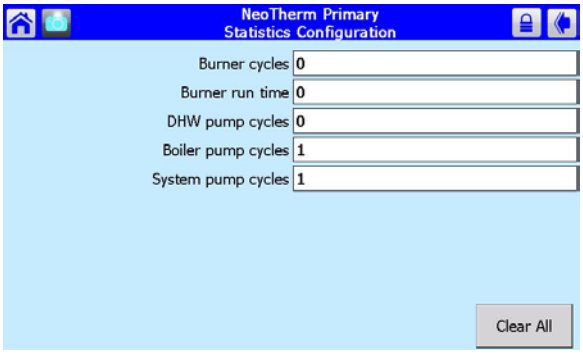

Fig. 135 – Statistics Configuration Screen

12.7 Analysis

The control system includes an Analysis branch that can display the behavior over a period of time for several different parameters: fan speed, outlet temperature, inlet temperature, etc.

How to get there –

Home Page <Select icon> Status Summary Screen <Details button> Any Configuration Screen <Analysis button> Analysis Setup Screen

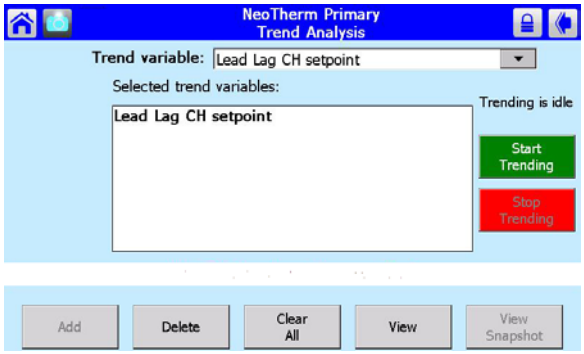

Fig. 136 – Analysis Setup Screen

To use this function, select the parameter you want to track from the pull-down list. The system will present a graph that tracks that variable.

To see the graph for the currently-selected function, press the View button.

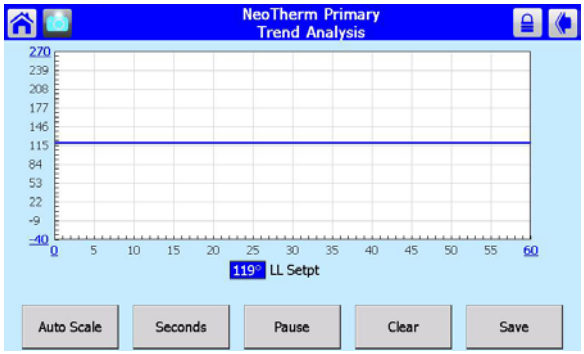

Fig. 137 – Trend Analysis Graph

The time scale can be adjusted by pressing the Seconds button in the lower left-hand corner.

12.8 Control Snapshot

The software allows you to take a "snapshot" of the current state of the controller, including setup information and operating information. This information can be helpful during troubleshooting.

How to get there –

Home Page <Setup button> Setup Screen <Control Snapshot button> Control Snapshot Screen

Figure 138 shows the Control Snapshot screen.

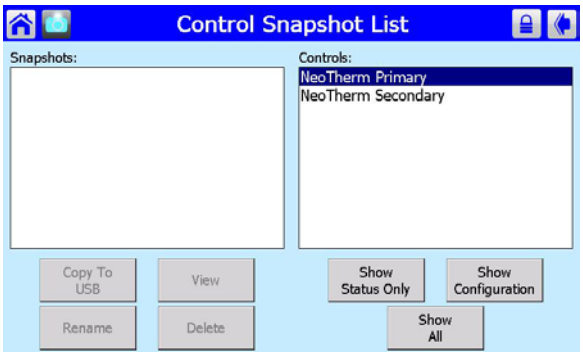

Fig. 138 - Control Snapshot List Screen

Select one of the controllers listed on the right side of the screen. Press one of the buttons below the right column to see the snapshot. See Fig. 139.

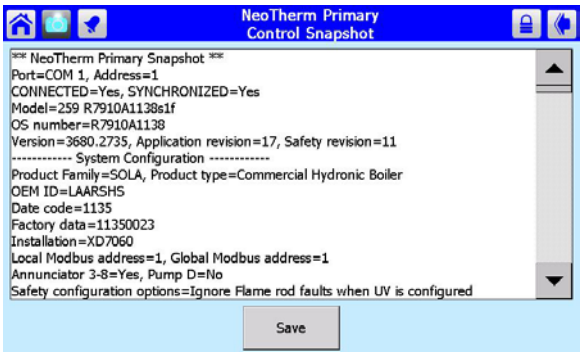

Fig. 139 - Typical Control Snapshot

The Show Status button captures the current status of the I/O of the control only. Show Configuration captures the current parameter settings and the control setup. You can save the snapshot, give it a name, or send a copy to the USB port.

12.9 Operating Sequence

Initiation

Each controller enters the Initiation sequence after one of these conditions:

- Initial power up
- Voltage fluctuations vary +10% or -15%
- Frequency fluctuations vary ±10%
- The demand, limit control input, or TT signals are interrupted during the prepurge period.
- After the Reset button is pressed.
- After a Fault is cleared using the displays.

The Initiation sequence also delays the boiler demand from being energized and re-energized from an intermittent AC line input or control input. If an AC problem exists for more than 240 seconds, a lockout will occur.

Start-Up Checks in a Lead/Lag System

For an explanation of Lead/Lag operation, see the first part of Section 9. In this section, we will focus on the aspects of Lead/Lag that might be helpful in troubleshooting.

When a Lead/Lag system is first powered up, the controller acting as the Lead/Lag Master goes through a "synchronization" process. During synchronization, the controller establishes communications with each of the Slave controllers via the Modbus link. The Slave controllers download some setup parameters and operating history information. (On a system with several boilers, this phase can take several minutes.) If the Master cannot establish communications with one of the Slaves, it triggers a Hold or Lockout.

The Master also checks the status of each of the flap valves. If the Master cannot determine whether a flap valve is open or closed, or if it cannot locate the correct number of flap valves, it triggers a lockout or hold.

If the system passes the checks described above, each of the individual controller and burner combinations is free to operate in the normal way. The self-check and firing sequence for each individual controller and burner combination is described in the following section.

Burner Ignition Sequence

Here is the start-up sequence following a Lead Lag (LL) Central Heating request:

1. The thermostat used for the LL Central Heat function calls for heat. On a system set up for Lead/Lag operation, this will be the System sensor. (The setpoint or modulation can also be controlled by an external 4 – 20 mA control.)
2. The Boiler pump and System pump are energized. The water temperature in the System loop drops until it reaches the LL Central Heat Setpoint minus the LL Central Heat On Hysteresis value.
3. The controller prepares to start the burner. The controller does a system check, flap valve check, and safety chain test. The blower fan is switched on.
4. The air pressure switch is closed, and the purge rate proving fan rpm is reached. The Pre-Purge time starts.
5. When the Purge time is complete, the purge fan rpm is changed to the Lightoff Rate.
6. When the fan rpm reaches the light-off rpm, the Pre-Ignition time begins.
7. During the Pre-ignition time, the controller energizes the igniter and checks for flame.
8. After Pre-ignition, the control enters the ignition sequence and the gas valve is energized. The flame signal is compared with a preset flame threshold value. If the flame signal is higher than the flame threshold, the gas valve remains on and the burner is allowed to continue to the Run phase. If the flame signal is below the threshold, the controller returns to the Pre-Purge phase and starts the ignition process again.
9. The igniter is turned off at the end of the ignition period.
10. During the Run period, the speed of the burner fan and the firing rate of the burner(s) is modulated in response to changes in demand. (See the next section – "Modulation Sequence.")
11. The demand ends when System sensor temperature equals the Lead/Lag Central Heat Setpoint plus the Lead/Lag Central Heat Off Hysteresis value (approx. +10°F).
12. At the end of the Lead/Lag Central Heat request, the burner is switched off. The fan stays on until Post Purge is complete.
13. Any new Lead/Lag Central Heat request is blocked for the Anti Short Cycle time.
14. The Boiler pump and System pump remain on during their pump overrun times.
15. At the end of the pump overrun times, the Boiler and System pumps are turned off.

Lead/Lag Modulation Sequence

For a detailed explanation, see Section 9.

Domestic Hot Water Priority

The start-up sequence for a Domestic Hot Water request, on a system with Domestic Hot Water priority, is essentially the same as the process we have just described. The Domestic Hot Water loop can be considered as just another heating loop on the system, except the controller can be set to give this loop priority. The input is supplied by an aquastat, rather than a thermostat. Circulation in the Domestic Hot Water loop is provided by a separate pump.

When a Domestic Hot Water demand appears at the same time as a call for heat by Central Heating, the priority feature forces the system to switch to the Domestic Hot Water demand for the priority time. The Domestic Hot Water priority demand forces the controller to operate using the DHW setpoint.

For a detailed explanation, see the material on Domestic Hot Water in Section 9.

Safety Shutdown Functions

Each controller has extensive self-checking and safety features. The controller will shut down the burner and lock it out under any of the following conditions:

During the Synchronization Period:

- Locks out if the Lead/Lag Master cannot locate any of the boilers, or cannot download information from any of the controllers.
- Locks out if the Lead/Lag Master cannot locate any of the flap valves, or cannot determine the status of a valve (Open or Closed).
- Locks out if a safety-related parameter has been changed, but the change has not been verified and the controller has not been reset using the button on the front of the control.

During the Initiate Period:

- All of the checks made under Synchronization, plus:
- Locks out if A/C line power errors occur.
- Locks out if four-minute Initiate period has been exceeded.

During the Standby Period:

- All of the checks made under Synchronization, plus:
- Locks out if the Flame signal is present after 240 seconds.
- Locks out if the Preignition Interlock is open for more than 30 seconds.
- Locks out if the Interlock Start check feature is enabled and the Interlock String (including the Airflow Switch) is closed for 120 seconds with the controller closed, perhaps indicating a jumpered or welded Interlock.
- Locks out if the Main Valve terminal is energized.
- Locks out if an internal system fault occurs.

During the Prepurge Period:

- All of the checks made under Synchronization, plus:
- Locks out if the Preignition Interlock opens anytime during the Prepurge period.
- Locks out if the Flame signal is detected for more than 10 seconds during Prepurge.
- Locks out if the Light Off Rate Fan RPM or Low Fire Switch is not reached within four minutes and fifteen seconds after the blower is commanded to drive to the light off rate fan RPM at the end of Prepurge.
- Locks out if the Main Valve terminal is energized.
- Locks out if an internal system fault occurs.

During the Pre-Ignition Time:

- All of the checks made under Synchronization, plus:
- Locks out if the Main Valve terminal is energized.

During the Main Flame Establishing Period (MFEP):

- All of the checks made under Synchronization, plus:
- Locks out if no flame is present at the end of the appropriate number of ignition retries.
- Locks out if an internal system fault occurs.

During the Run Period:

- All of the checks made under Synchronization, plus:
- Locks out if an internal system fault occurs.
- Locks out if a safety-related parameter has been changed, but the change has not been verified and the controller has not been reset using the button on the front of the control.

During the Postpurge Period.

- All of the checks made under Synchronization, plus:
- Locks out if the Preignition Interlock does not close in five seconds.
- Locks out if the Main Valve terminal is energized.
- Locks out if an internal system fault occurs.
- Locks out if flame is sensed 240 seconds after the Run period.

Section 13
REPLACEMENT PARTS

Use only genuine LAARS replacement parts.

13.1 General Information

To order or purchase parts for the LAARS NeoTherm LC Appliance, contact your nearest LAARS dealer or distributor. If they cannot supply you with what you need, contact Customer Service. (See the back cover for addresses, and for telephone and fax numbers.)

13.2 Parts List

Key No.	Part No. - 1000	Part No. - 1700	Description
1	10J1213		RAIL, FRONT LEG, JACKET
2	E2334702		SWITCH, PRESSURE, AIR/GAS, 0.18” SET POINT
3	E2334900		SWITCH, PRESSURE, AIR/GAS, 0.15” SET POINT
4	10J7212		SPARK GENERATOR
5	10J7014		PANEL, MOUNTING, SPARK GENERATOR
6	10J1212		RAIL, SIDE TOP, JACKET
7	10J1214		RAIL, TOP, FRONT
8	10J7007		BRACKET, SLIDE, TOP
9	RS2073903		GASKET, STRIP, FOAM, ADHESIVE, 3/8 X 1/8 X 27.00 LG
10	10J3038		BRACKET, PIPE
11	10J7006		BRACKET, MOUNTING, SLIDE, TOP
12	10J1270		BRACKET, ANGLE, STIFFENING, CONTROL MOUNT
13	10J7013		BRACKET, MOUNTING, SIDE, BOTTOM
14	10J1204		CROSS BRACE, HX, BASE
15	10J1205		SUPPORT
16	10J1207		BRACKET, LIFT, NT 1.0
17	10J1203		CHANNEL, BASE
18	10J1206		RAIL, HX
19	10J1238		BRACKET, LEVELING, HEX.
20	F2031500		MOUNT, LEVELING, HEX. 1/2-13 THD X 2-11/16 LG
21	10J1210		WELDMENT, BASE
22	10J1246		BRACKET, ANTI-RACKING, LEFT FRONT
23	10J1247		BRACKET, ANTI-RACKING, LEFT SIDE
24	E2341200		BOX, ELECTRICAL, SQUARE, 4 X 1.5 IN
25	R2074402		GASKET, CLOSED CELL, .75” X .06” X 4.5” CUT LG.(QTY 2).
26	10J3025		COVER, ACCESS, FIELD CONNECTIONS
27	10J2520		PLATE, VENT ADAPTER ASS’Y
28	RS2073903		GASKET, STRIP, FOAM, 3/8 X 1/8, ADH X 36”
29	10J3018		COVER
30	RS2073903		GASKET, STRIP, FOAM, 3/8 X 1/8, ADH X 21”
31	S2116500		GROMMET, 2” PIPE, FLEX
32	10J3017		COVER, ACCESS, HX OUTLET SENSOR
33	R10J1218		REAR PANEL, ASSY WITH GASKET
	RS2073903		GASKET, STRIP, FOAM, ADHESIVE, 3/8 X 1/8 X 27.00 LG
	10J1216		REAR PANEL
34	S2014100		GROMMET, SEALING, PIPE, 3/4” DIA.

Key No.	Part No. - 1000	Part No. - 1700	Description
35	10J3019		COVER
36	S2116600		GROMMET, 1 1/2” PIPE, FLEX
37	10J3031		PLATE, RETAINER, GASKET, HX
38	10J3030		GASKET, HX OUTLET
39		17J1205	SUPPORT, HX
40		17J1231	CROSS BRACE, FRONT
41		17J1010	BASE, WELDMENT
42		F2032800	CABLE TIE, PUSH MOUNT, HIGH TEMP, BLACK
43		17J7014	PANEL, MOUNTING, SPARK GENERATOR
44		E2348200	SWITCH, PRESSURE, 1.90 W.C. SET POINT
46		E2348100	SWITCH, PRESSURE, AIR/GAS 0.07 IN W.C.
47		17J1203	CHANEL, BASE
49		17J1214	RAIL, TOP, FRONT
50		17J1018	BRACKET, GAS PIPE
51		F2033800	CLAMP, U-BOLT, FOR 2” PIPE, 5/16”-18
52		17J1212	RAIL, SIDE TOP, JACKET
53		17J3001	SUPPORT, JACKET
54		R2073903	GASKET, STRIP, FOAM, ADHESIVE, 3/8 X 1/8 X 27.00 LG
55		17J3038	BRACKET, PIPE
56		R2073904	GASKET, STRIP, FOAM, ADHESIVE, 3/8 X 1/8 X 44.25 LG
57		R17J1216	REAR PANEL
58		17J3025	COVER, ACCESS, FIELD CONNECTIONS
59		S2008000	GASKET, CLOSED CELL, .75” X .06” X 4.5” CUT LG.
60		17J3030	GASKET, HX OUTLET, NT 1.7
61		17J3031	PLATE, RETAINER, GASKET
62		17J2520	PLATE ASSY, CONNECTION, INLET,
63		S2117200	GROMMET, 2 1/2” PIPE, FLEX
64		S2116500	GROMMET, 2” PIPE, FLEX
65		F0035900	SCREW, PHIL,PAN HD. #6-32 X 5/8”LG.
66		E2350300	ELECTRICAL CONNECTOR
67		E2348300	OUTLET BOX/DUAL RECEPTACLE
68	10J1265	10J1265	PANEL ASSY, DOOR
69	10J1268	10J1268	CLAMP, ATTACHING, BEZEL
70	10J1262	10J1262	BEZEL, CONTROL
71	F2032400	F2032400	BUTTON PLUG
72	A2117600	A2117600	2” GAUGE, PRESS/TEMP, REMOTE
73	R10J1251	R10J1251	PANEL, FRONT, TOP WITH GASKETS & SCREWS
74	R2073804	R2073804	GASKET, D-SHAPE, RUBBER, .75 X 46.5” LG
76	10J1240	10J1240	BRACKET, T & P GAUGE MOUNTING
77	E2339800	E2339800	DISPLAY, TOUCH CONTROL, HONEYWELL, LARGE
78	10J1243	10J1243	BRACKET, MOUNTING, LARGE DISPLAY
79	E2349900	E2349900	ROCKER SWITCH, 30 AMP, DOUBLE POLE SINGLE THROW
80	17J1241	17J1241	BRACKET, SWITCH MOUNTING
81	R10J3057	R17J3057	FRONT PANEL, GASKET ASSY WITH GASKET & SCREWS

Key No.	Part No. - 1000	Part No. - 1700	Description
82	R2073812	R2073812	GASKET, D-SHAPE, RUBBER,
	R2073903	R2073903	GASKET, STRIP, FOAM, ADHESIVE, 3/8 X 1/8
83	10J1231	17J1231	Cross brace, Front HX, BASE
84	R10J1221	R17J1221	PANEL, SIDE, ASSY WITH GASKE TS
85	R2074405	R2074405	GASKET, CLOSED CELL, .75” X .06” X 47”
	R2073909	R2073909	GASKET, STRIP, FOAM, ADHESIVE, 3/8 X 1/8 X 53” LG
86	R10J1234	10J1234	TOP CENTER SUPPORT
	R2073903	R2073903	GASKET STRIP, FOAM 3/8”X1/8”X5.75”L
87	R10J1245	R10J1245	BRACKET, SEALING, BEZEL
	R2074503	R2074503	EDGE GRIP RUBBER SEAL 3/64 -9/64 X 26.625 LG
	F2022100	F2022100	SCREW, SELF TAPPING, #8 X 3/8” LG. TYPE A, HEX HEAD
88	R10J1219	R17J1219	TOP, CASE ASSY
89	R2073812	R2073815	GASKET, D-SHAPE, RUBBER, 14’
	R2074405	R2074405	GASKET, CLOSED CELL, .75” X .06” X 26.75”
90	A0063600	A0063600	PRESSURE RELIEF VALVE (75PSI)
	A2114802	A2114802	PRESSURE RELIEF VALVE (125PSI)
91	S2117900		O-RING, 1 7/16” OD X 1/16, BUNA-N
92	A2116700		VENTURI. GAS/AIR MIXING
93	RS2105200		O-RING, 4MM THICK X 110MM ID
94	RA2113100		BLOWER, COMBUSTION AIR
100	S2116800		GASKET, FAN FLANGE
101	P0026800		PLUG, PIPE, BRASS, 1/4” NPT
	P2080300		PLUG, PIPE, STAINLESS STEEL, 1/4” NPT
102	P0071500		PLUG, 3/4” STEEL
	P2080200		PLUG, 3/4” STAINLESS STEEL
103	RE2319900	RE2319900	SENSOR, TEMPERATURE, WATER, DUPLEX
104	R1-592	R1-592	COIN VENT VALVE
105	F2029100		TIE, CABLE, 14-3/4 LONG X 0.31” WIDE, HEAT STABILIZED
106	S2117801		HEAT EXCHANGER, GIANNONI TRIO
107	10J4047		CLIP, QUICK DISCONNECT
108	S2116900		O-RING, 61mm x 53mm x 4mm
109	E2339400	E2339400	THERMISTOR, NTC, 1/8” NPT, STAINLESS STEEL WELL
110	E2340000	E2340000	SENSOR, TEMPERATURE, STACK, 1/4” NPT
111	P2079200	P2079200	PLUG, PIPE, 1” NPT, CI (NTH)
	P0001100	P0001100	BUSHING 1” NPT X 3/4” NPT BLK (NTH CSD-1)
	P2080400	P2080400	PLUG, PIPE, 1” NPT, STAINLESS STEEL (NTV)
	P2081700	P2081700	BUSHING 1” NPT X 3/4” NPT STAINLESS STEEL (NTV CSD-1)
112	P2079000	P2079000	VALVE, CHECK, 1/2” X 1/4 BSPP
113	RP2078900	RP2078900	WELL, IMMERSION, 1/2” NPT, 2” LONG W/ CLIP
114	P2079100	P2079100	CLIP, LOCKING, IMMERSION WELL
115	P2016000	P2016000	PLUG, 1/2” STEEL (NTH)
	P2080500	P2080500	PLUG, 1/2”, STAINLESS STEEL (NTV)
116	10J4040		PIPE, WATER OUTLET ASSY (NTH)
	10J4060		PIPE, WATER OUTLET STAINLESS STEEL, ASSY (NTV)

Key No.	Part No. - 1000	Part No. - 1700	Description
118	10J4050		PIPE, WATER INLET ASSY(NTH)
	10J4080		PIPE, WATER INLET, STAINLESS STEEL, ASSY (NTV)
119	70-236	70-236	PIPE PLUG, MALLEABLE IRON, BLACK, 1/8 NPT (NTH)
	P2042300	P2042300	PIPE PLUG, STAINLESS STEEL, 1/8 NPT (NTV)
120	V2000200		VALVE, GAS, MANUAL, BALL TYPE, 3/4” NPT
121	10J6005		NIPPLE, 1 1/2 NPT, SCHED 40, W/ 3/4 NPT PORT
122	10J6001		NIPPLE, FLANGED, 3/4 NPT, NT 1000
123	S2117900		O-RING, 1 7/16” OD X 1/16, BUNA-N
124	V2019600		VALVE, GAS, DUNGS, GB-ND 057 XP
125	P2068500		FLANGE, GAS VALVE, HONEYWELL 3/4” NPT
126	10J6001		NIPPLE, FLANGED, 3/4 NPT
127	F2023300		SCREW, M5-.8 X 12MM, ALLEN SOC HD
128	F2023700		WASHER, M5, LOCK, INTERNAL TOOTH
129	10J6006		PIPE, GAS, U SHAPE, 3/4 NPT
130	P2076500		NIPPLE, 1-1/2” NPT X 30” LG. BLK
131	P0030700		1.5 INCH UNION NPT THREADS
132	P2036800		CAP, PIPE, BLK IRON, 1-1/2” NPT
133	10J6002		TEE,1-1/2 NPT, MALE, W 1/4 PORT
134	R0384800		VALVE, GAS, MANUAL, BALL TYPE, 1-1/2” NPT
135	F2026400		SCREW, M4 X 30MM, CHEESE HD
136	P2014200		PLUG, HD. 1/4” NPT, SQ SOCKET, BLK
137	R10J5150		TRANSITION ASSEMBLY, VENTURI W/ PARTS
	V2018600		ADAPTER, 4MM HOSE BARB X M5-.8 W/WASHER
	Q0068441		1/4” TUBE, PRESSURE SENSING, NT 6.26” LONG
	P2081000		COUPLING, NO-HUB, SHIELDED, 2”
	P0004101		FITTING, 1/4 COMP X 1/4 NPT, DRILLED OUT
	10J5153		ELBOW ASSY, VENTURI TRANSITION
139		S2107500	GASKET, PLEMUN TO FAN
140		S2113100	GASKET, FAN FLANGE
141		P0026800	PLUG, PIPE, BRASS, 1/4” NPT (NTH)
		P2080300	PLUG, PIPE, STAINLESS STEEL, 1/4” NPT (NTV)
142		P2080200	PLUG, PIPE, 3/4” STAINLESS STEEL (NTV)
		P0071500	PLUG, 3/4” STEEL (NTH)
143		S2114700	ASSEMBLY, GIANNONI TRIO, HEAT EXCHANGER
144		17J4047	CLIP, QUICK DISCONNECT
147		F2029100	TIE, CABLE, 14-3/4 LONG X 0.31” WIDE, HEAT STABILIZED
154		17J4003	PIPE, OUTLET, NT (NTH)
		17J4013	PIPE, OUTLET, STAINLESS STEEL (NTV)
155		60D5001	NT 1.7, VENTURI SPACER
156		F2032300	SCREW, CAP, M8-1.25 X 22MM HEX HEAD SOCKET
157		A2115000	VENTURI, GAS AIR
158		17J5002	AIR, CONNECTOR, PLATE
159		P0015100	NIPPLE, 1” NPT X CLOSE, BLACK
160		RV2003000	VALVE, GAS, MANUAL BALL TYPE
161		17J6002	PIPE, GAS, VENTURI NT 1.7

Key No.	Part No. - 1000	Part No. - 1700	Description
162		P0012300	NIPPLE CLOSE 1/4 NPT (CSD-1)
164		V2018600	ADAPTER, 4MM HOSE BARB X M5-.8 W/ WASHER
165		P2032400	BUSHING, REDUCER, 1/4X1/8 NPT BLACK IRON
166		RP2050100	FLANGE KIT, GAS VALVE
168		S0064900	BUSHING NYLON 7/8" SLIT
169		R2004100	SWITCH, LOW GAS PRESSURE (CSD-1)
170		V2019700	VALVE, GAS, SERVO-REGULATED
171		P2076400	NIPPLE, 3/4X1 3/4, BLACK IRON
172		F2011300	SCREW, HEX HEAD, #10-24 UNC X .75"LG
174		S2104900	GASKET, VENTURI GAS VALVE, CORK
177		P203200	CAP, PIPE, BLACK IRON, 2" NPT
178		P0026800	PLUG, PIPE, BRASS 1/4 NPT (NON-CSD-1)
179		17J6003	PIPE SUPPLY GAS, NT 1.7
180		P0030800	UNION 2" NPT
181		17J6005	PIPE, GAS, MAIN NT 1.7
182		S2120100	O-RING 2-7/8"OD x 2-5/8"ID
183		17J4005	PIPE INLET, NT 1.7, SCH 40, STEEL (NTH)
		17J4015	PIPE INLET, NT 1.7, SCH 40, 316 STAINLESS STEEL (NTV)
184	RS2116200	RS2114300	TRANSITION, "FLAPPER"
185	RF2029200	RF2012800	SCREW, M5-0.8 X 16 MM, SOC HD
186	S2117100	S2117100	GASKET, BURNER
187	R2071700	RL20202	BURNER W/ GASKET
188	R2071500	R2071500	IGNITOR, SPARK, W/ GASKET
189	RW2013300	RW2013300	GASKET, IGNITOR
190	S2112600	S2112600	FLANGE NUT, M6 SERRATED
191	RS2114200	RS2114200	ASSEMBLY, DOOR, HEAT EXCHANGER
192	T2110600	T2110600	TILE, REFRACTORY, FRONT, COMBUSTION CHAMBER
193	T2110700	T2110700	TILE, REFRACTORY, REAR
194	S2114501	S2114700	HEAT EXCHANGER
195	S2112700	S2112700	SCREW, M4 X 8
196	R2071400	R2071400	FLAME SENSOR, W/ GASKET
197	RW2013400	RW2013400	GASKET, FLAME SENSOR, NT
198	10-596		TEE, 1/4" BARB, PLASTIC
199	Q0078806		TUBE, SILICONE, .188 ID X .32 OD X 3 FT
200	F2013000		CLAMP, BAND, SPRING, 5/16" (8mm) INTERNAL DIAMETER
201	R2074601	R2074701	CONTROL MODULE PRIMARY
	R2074602	R2074702	CONTROL MODULE SECONDARY
	R2074603	R2074703	CONTROL MODULE PRIMARY (CSD-1)
	R2074604	R2074704	CONTROL MODULE SECONDARY (CSD-1)
202	10J7024	17J7024	BRACKET, SLIDE STOP, CONTROL PANEL
203	A0014300	A0014300	ALARM BELL OPTIONAL
204	RE2217700	RE2217700	HIGH LIMIT
205	E2327800	E2327800	RELAY
206	10J720700	10J720700	TRANSFORMER

Key No.	Part No. - 1000	Part No. - 1700	Description
207	R10J7008	R10J7008	PANEL ASSY, CONTROL, SLIDING (WITH DECALS)
	10J7019	10J7019	LABEL, HIGH VOLTAGE CONNECTIONS, TB1, TB2 & TB5
	10J7021	10J7021	LABEL, LOW VOLTAGE CONNECTIONS, TB3, TB4
	10J7025	10J7025	LABEL, LOW VOLTAGE CONNECTIONS, TB6 & TB7
	F2028400	F2028400	TIE, CABLE, HEAT STABILIZED, 5”
208	RE2076500	RE2076500	LWCO KIT, NT
209	F2024900	F2024900	HOSE CLAMP, #12, 1.25-.68
210	A0114400	A0114400	HOSE, 90, .875 ID, RUBBER
211	A2119200	A2119200	SWITCH,SUBMINIATURE, LIQUID LEVEL CONTROL
212	A2119000	A2119000	CAP, CONDENSATE TRAP
213	A2119700	A2119700	TRAP, CONDENSATE
214	10J126900	10J126900	BRACKET, MOUNTING, TRAP
215	P2073200	P2073200	COUPLING, 3/4” TO 1/2”, REDUCING, PVC
216	P2067701		PIPE, PVC, 1/2” X 1.49 LONG, SCH 40
217	10J1237		BRACKET, HOSE, TRAP
218	A2119400	A2119400	SPHERE, 1.00 DIA
219		P2082201	TUBING, PVC, CLEAR FLEX, 3/4 I.D X 1” O.D. X 1/8 WALL
220		P2067604	PIPE, PVC, 3/4” SCH 40 x 37.5 LG.
221		P2083900	PIPE, PVC 3/4” SCH 40, 16.25 LONG W/HOLE
222		P2082202	TUBING, PVC, CLEAR FLEX, 3/4 I.D X 1” O.D. X 1/8 WALL
223	F2031800	F2031800	SCREW, #10 X 1/2, PHILLIPS PAN HEAD, STEEL, BLACK OXIDE, TYPE 25
224	F2032000	F2032000	RETAINER, SPLIT RING, #8
225	F2031900	F2031900	SCREW, CAPTIVE, #8-32 X 15/16”
226	10J126300	10J126300	COVER, CONTROL, SLIDING
227	10J4052	10J4052	FLOW SWITCH
228	CR2032		BACK UP BATTERY FOR HONEYWELL DISPLAY

13.3 Parts Illustrations

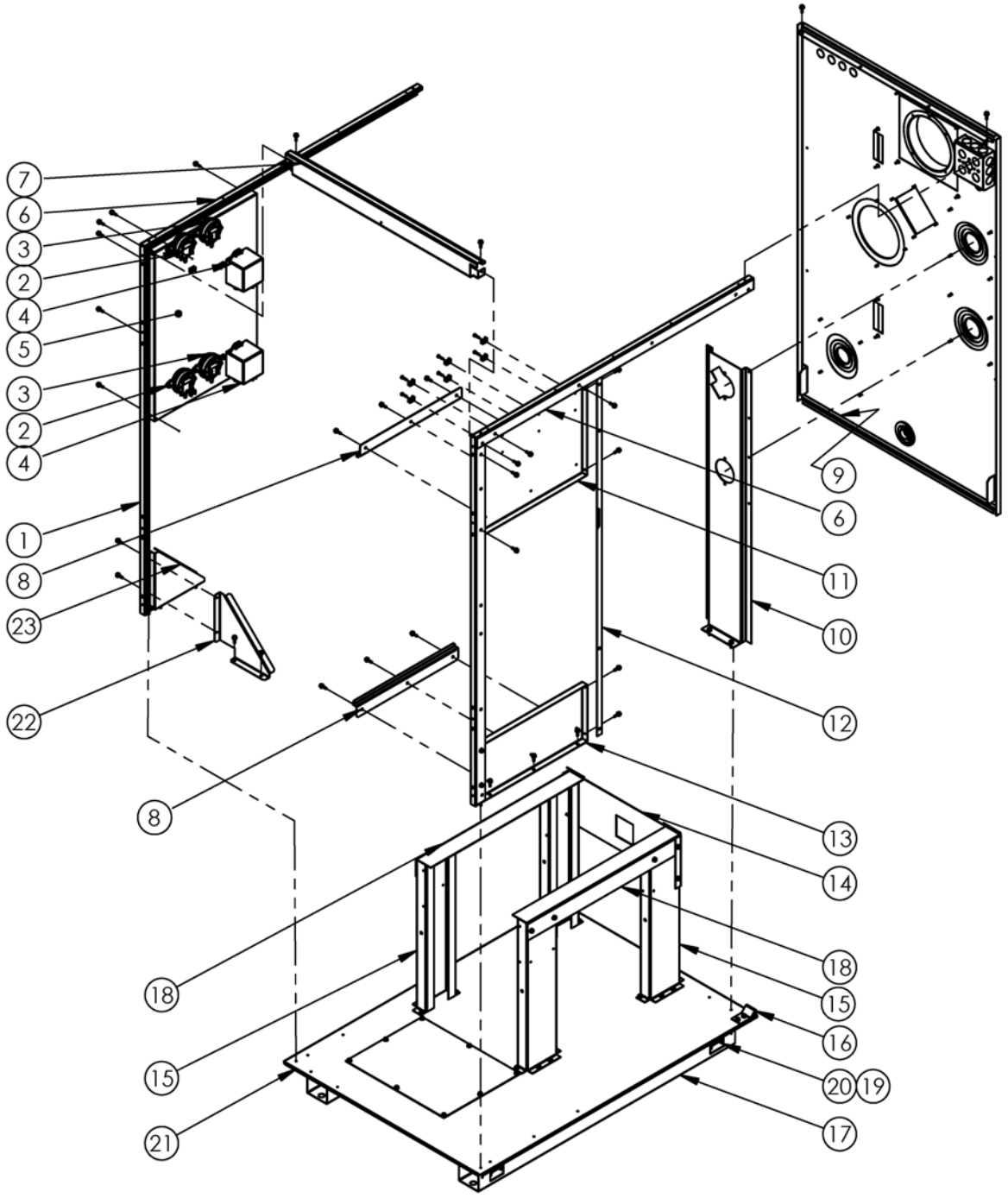

Fig. 140 - Machine Frame - NT1000

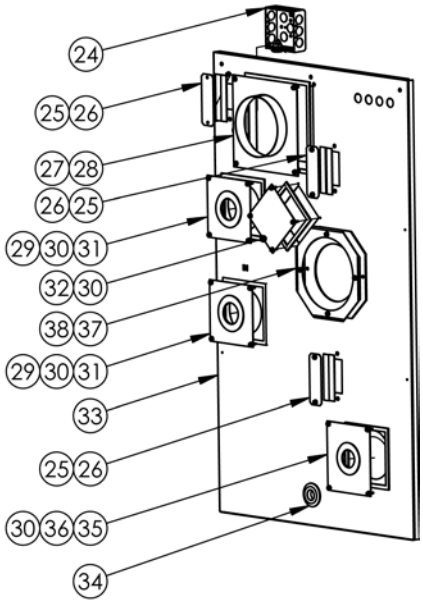

Fig. 141 - Rear Panel - NT1000

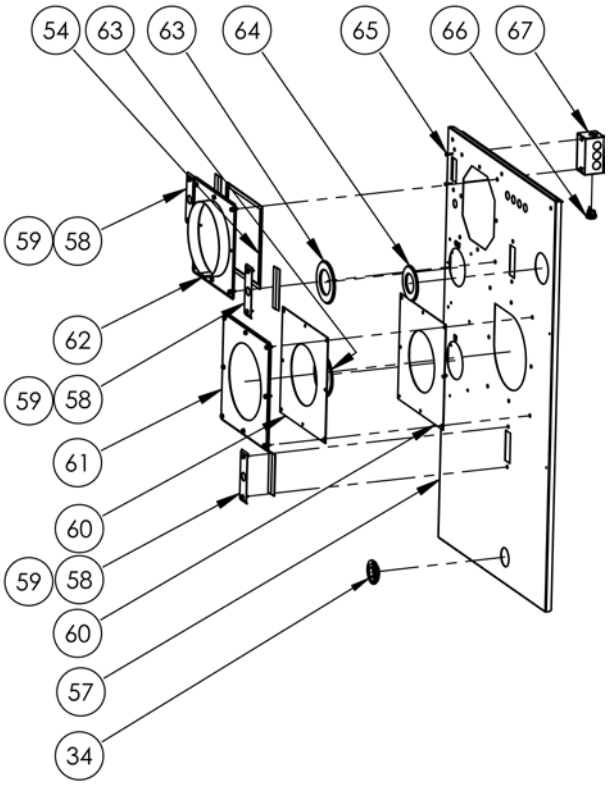

Fig. 142 - Rear Panel - NT1700

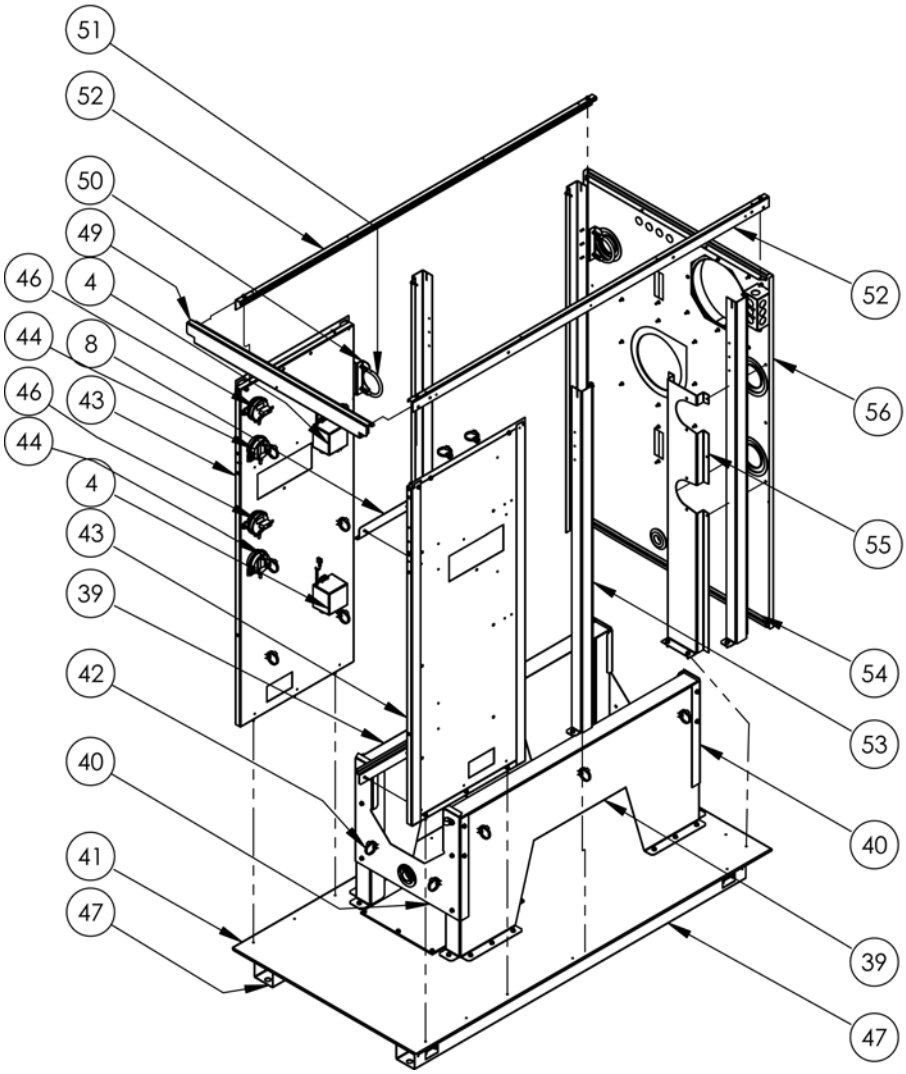

Fig. 143 - Machine Frame - NT1700

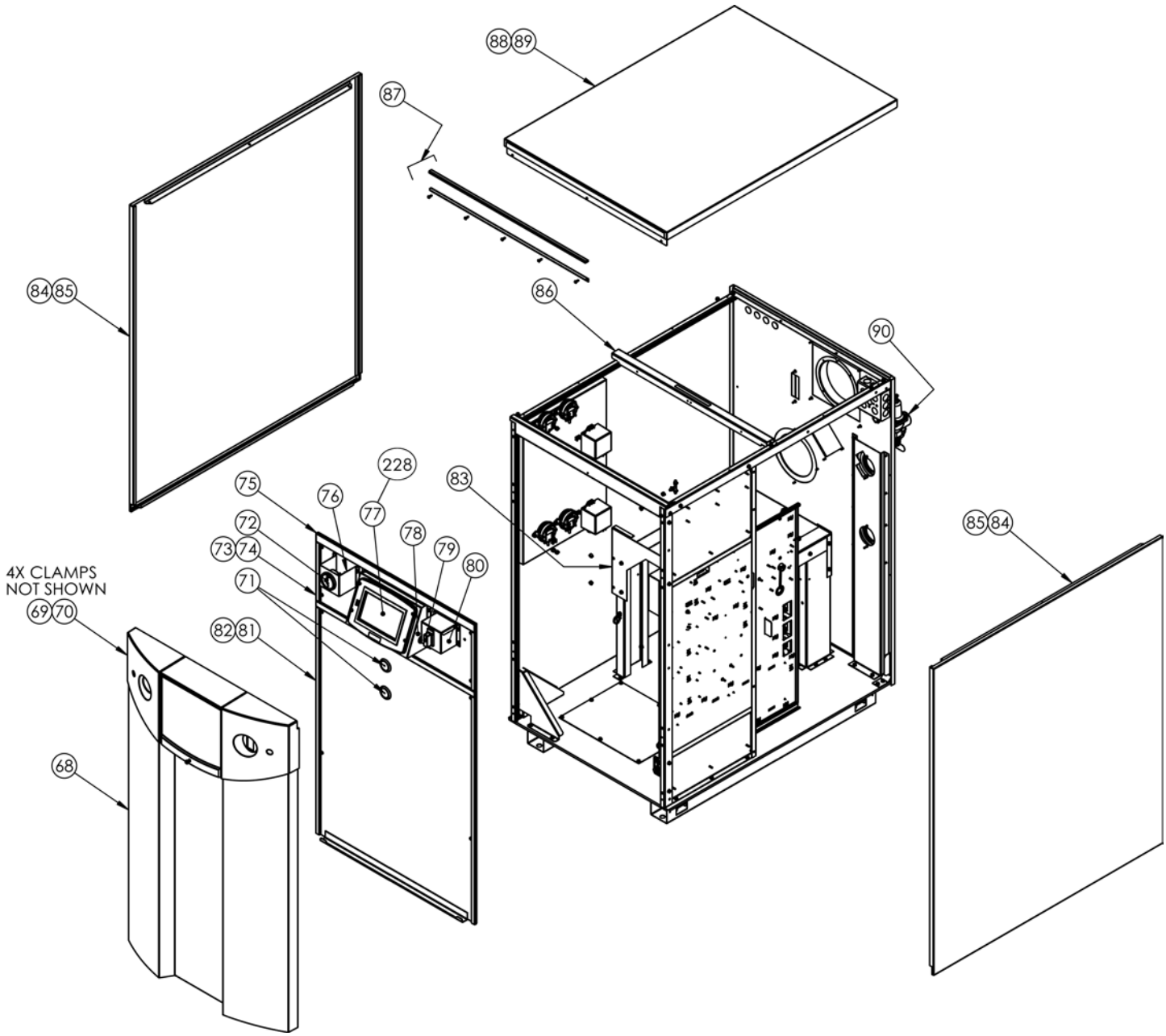

Fig. 144 - Front Panels and Covers - NT1000 and NT1700

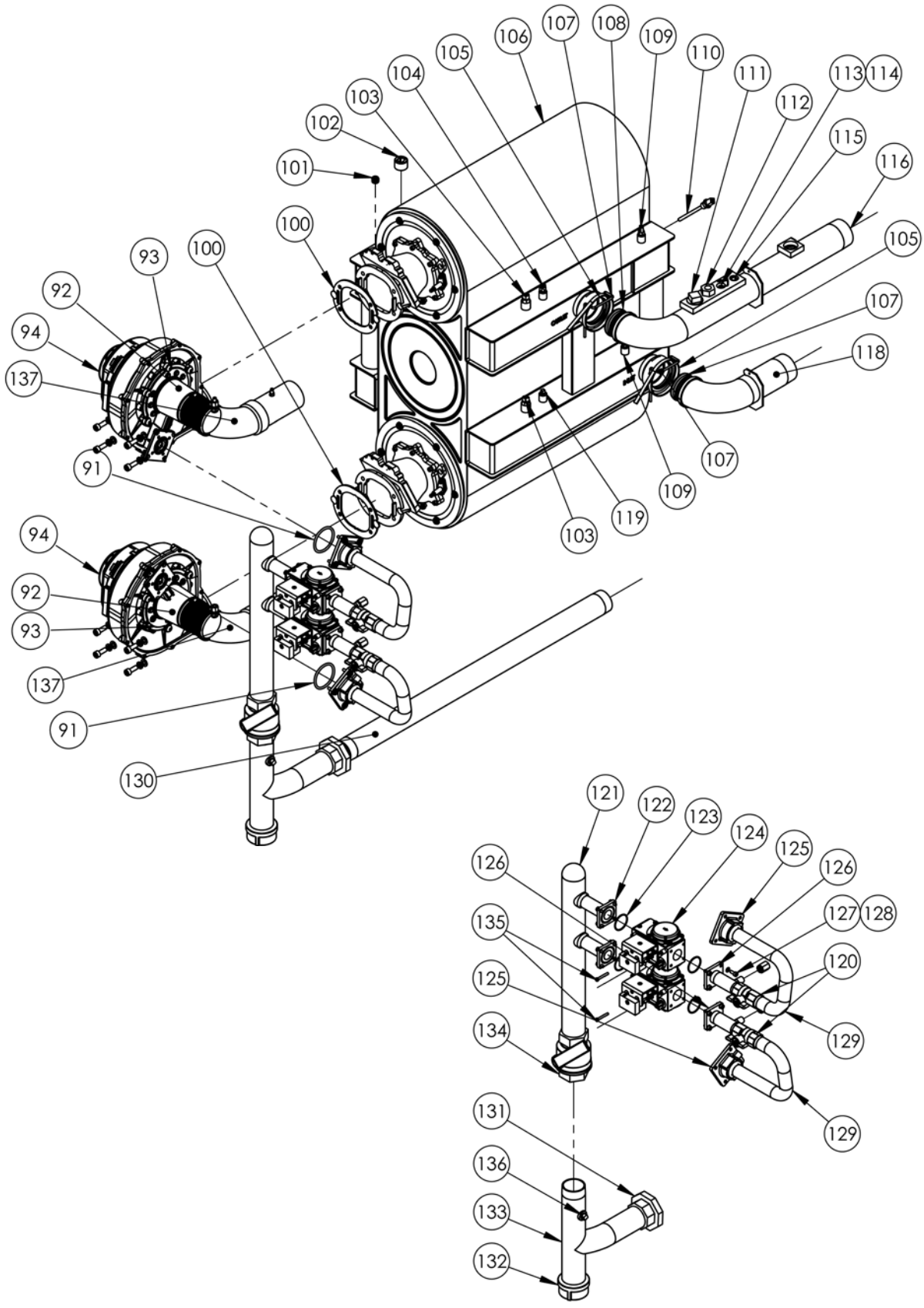

Fig. 145 - Burners and Combustion Chamber - NT1000

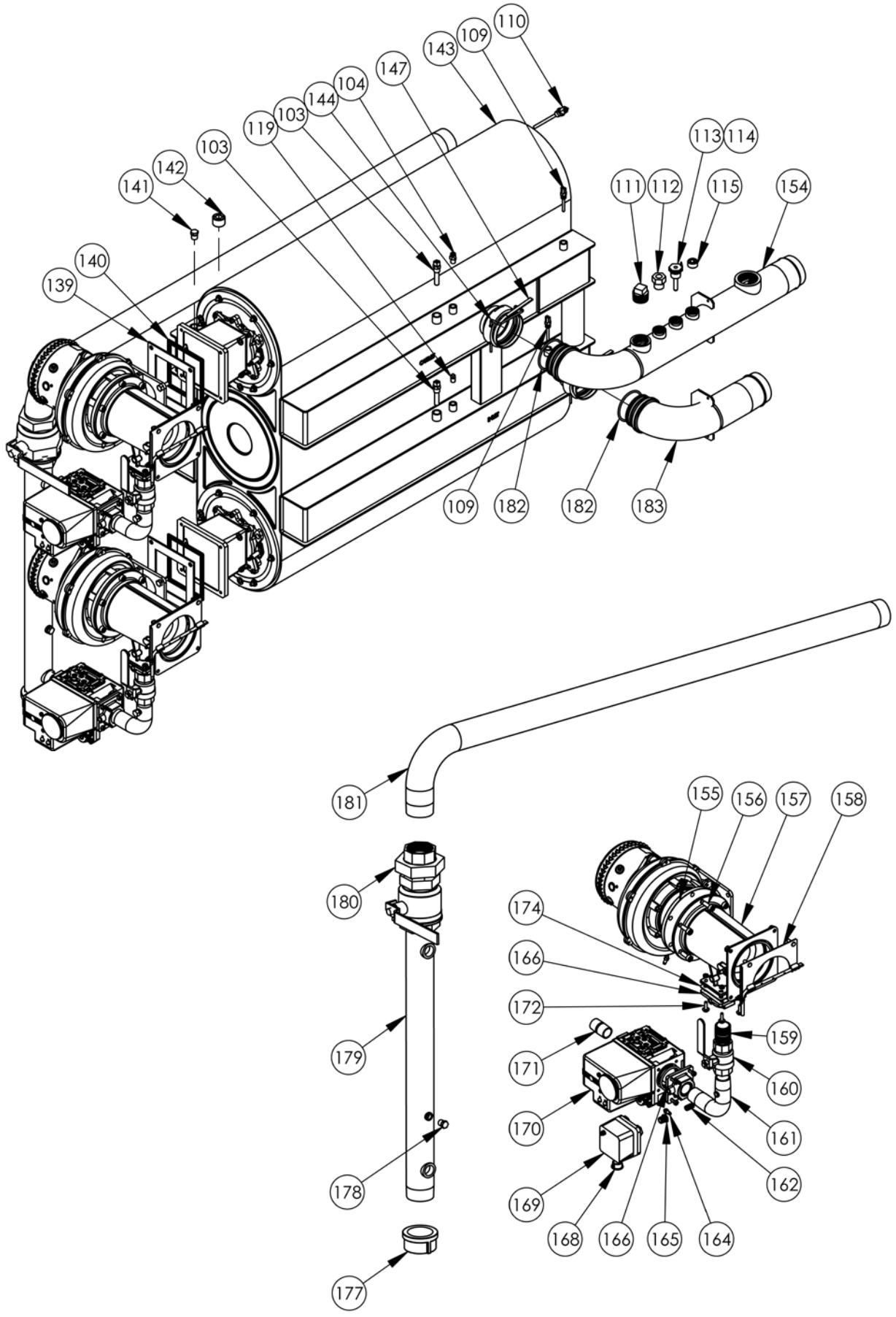

Fig. 146 - Burners and Combustion Chamber - NT1700

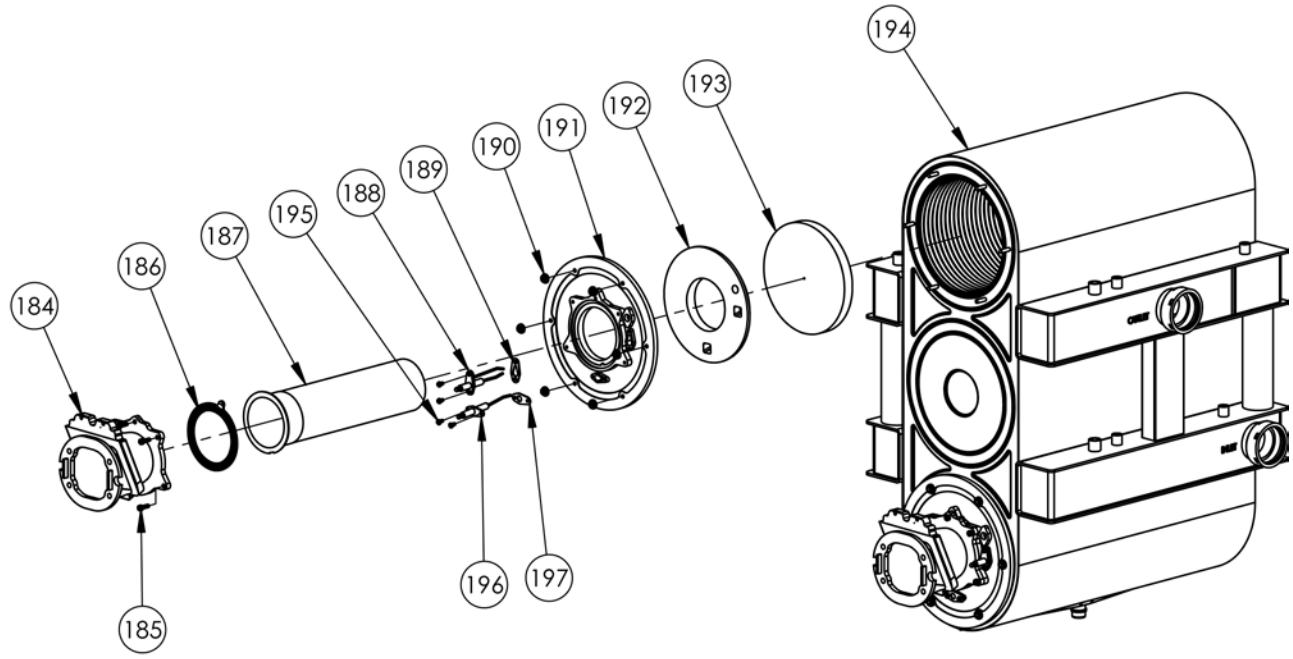

Fig. 147 - Heat Exchanger Components - NT1000 and NT1700

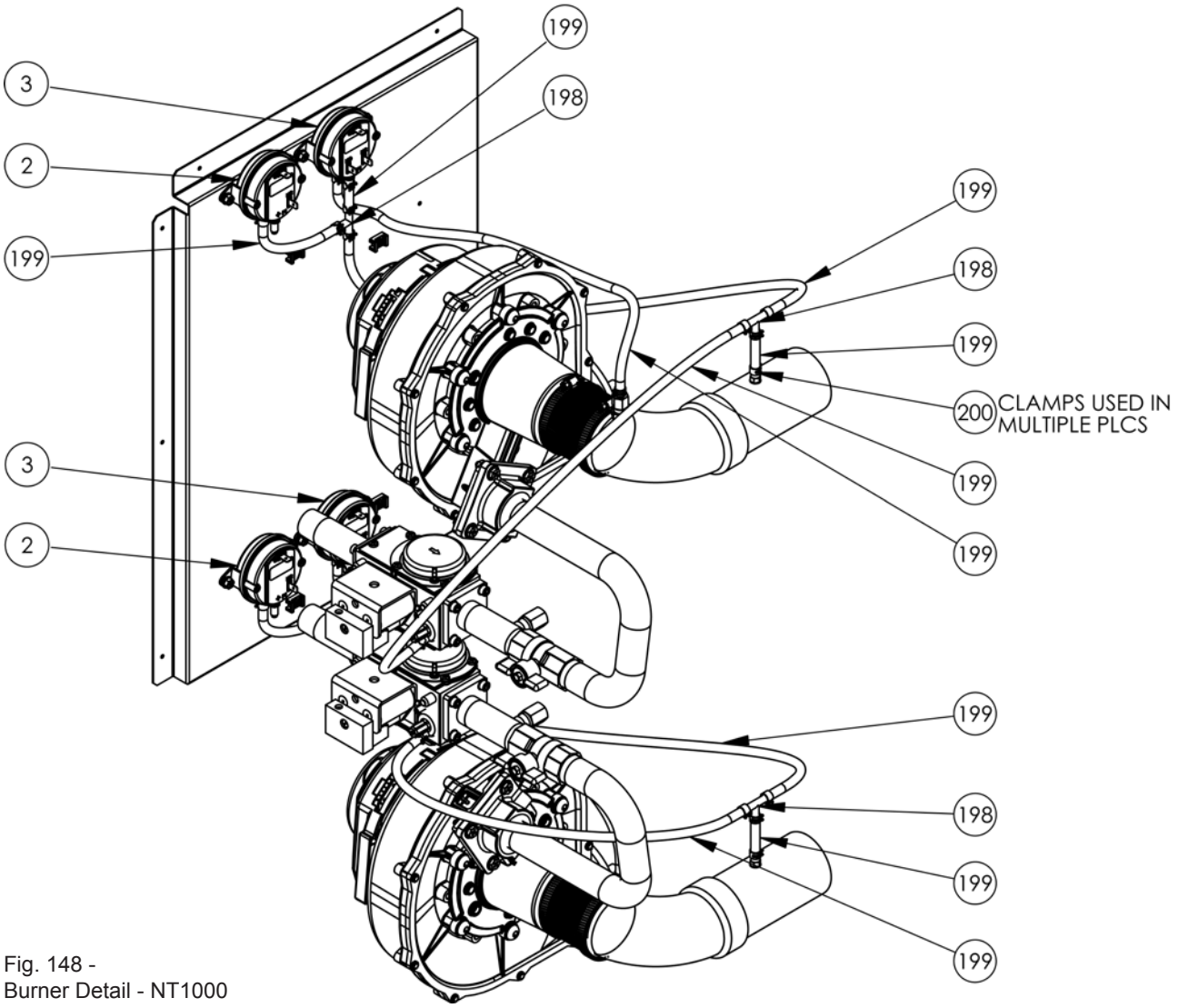

Fig. 148 -
Burner Detail - NT1000

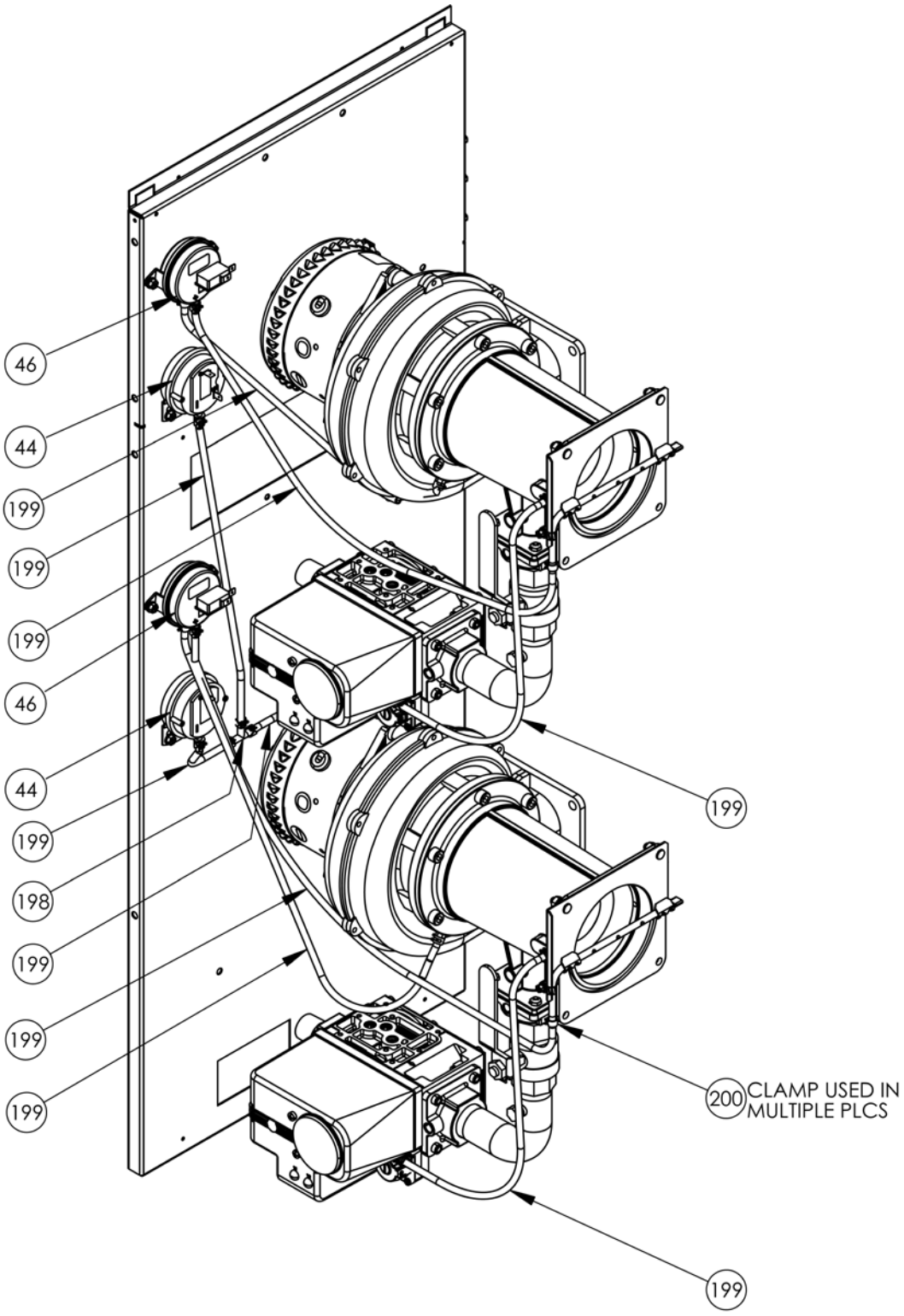

Fig. 149 - Burner Detail - NT1700

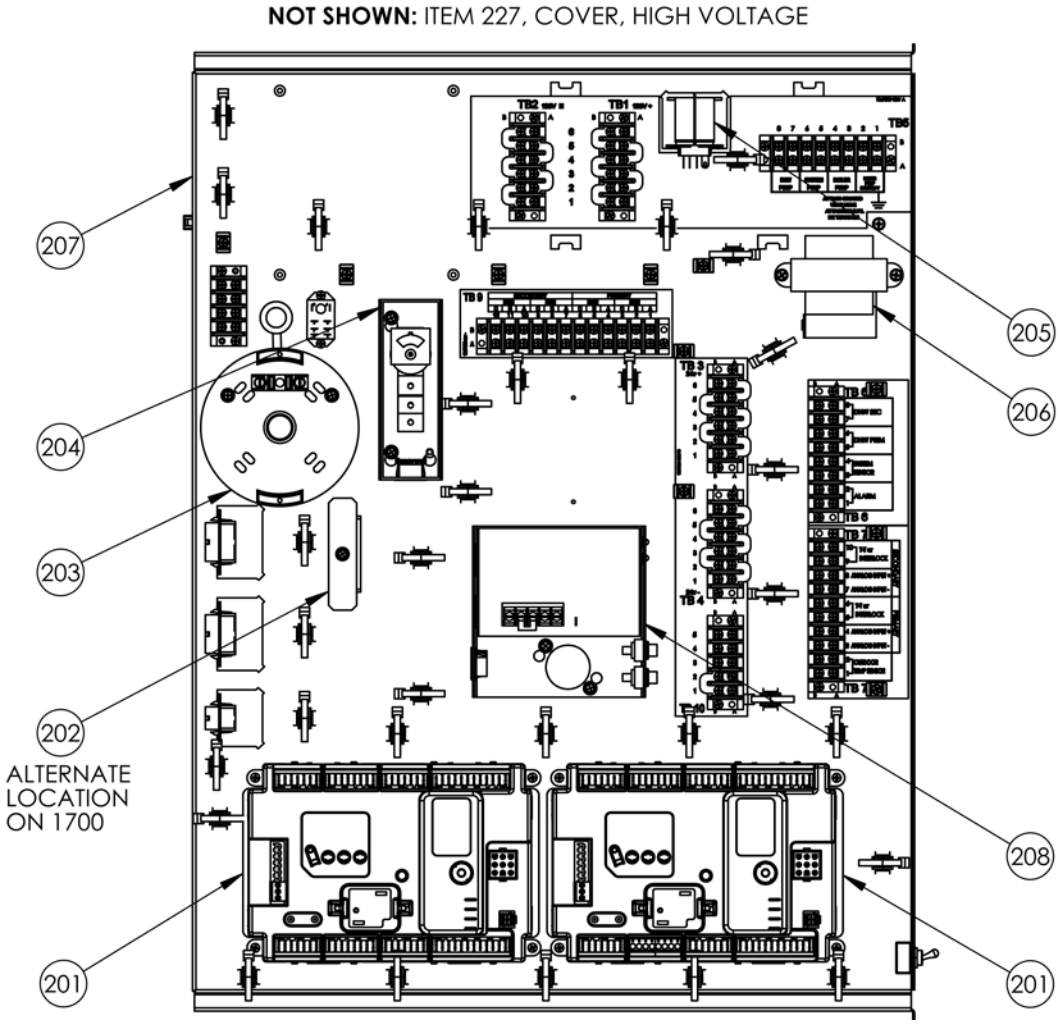

Fig. 150 - Electronic Components

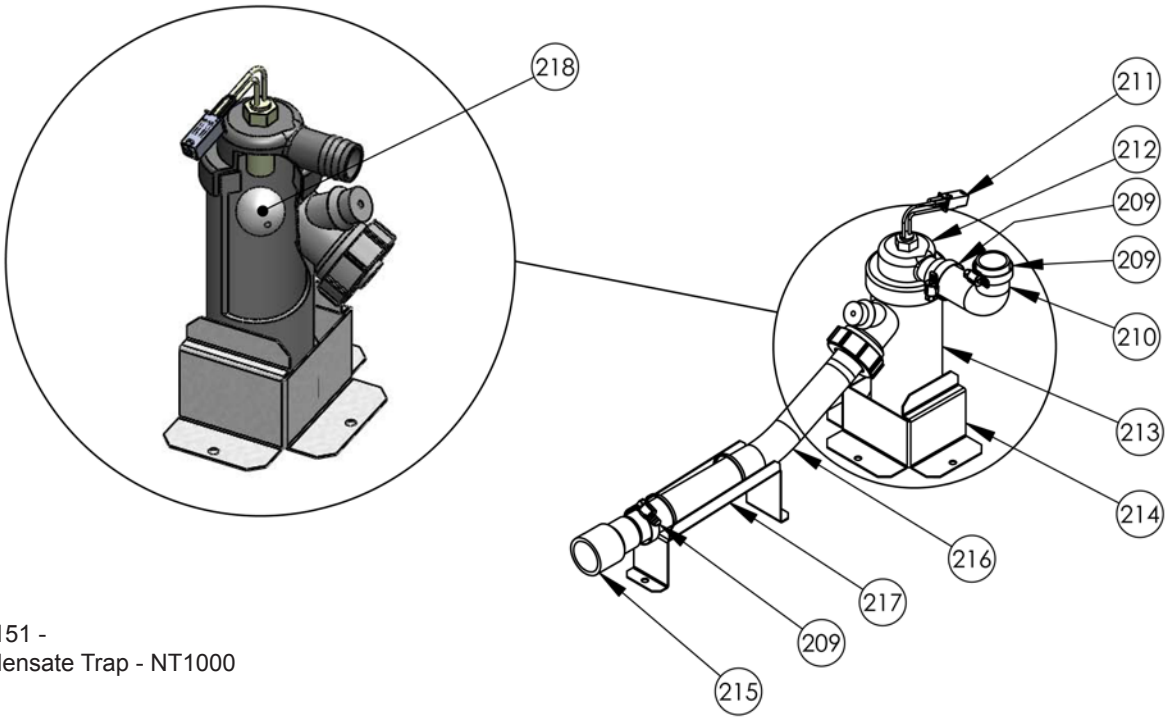

Fig. 151 -
Condensate Trap - NT1000

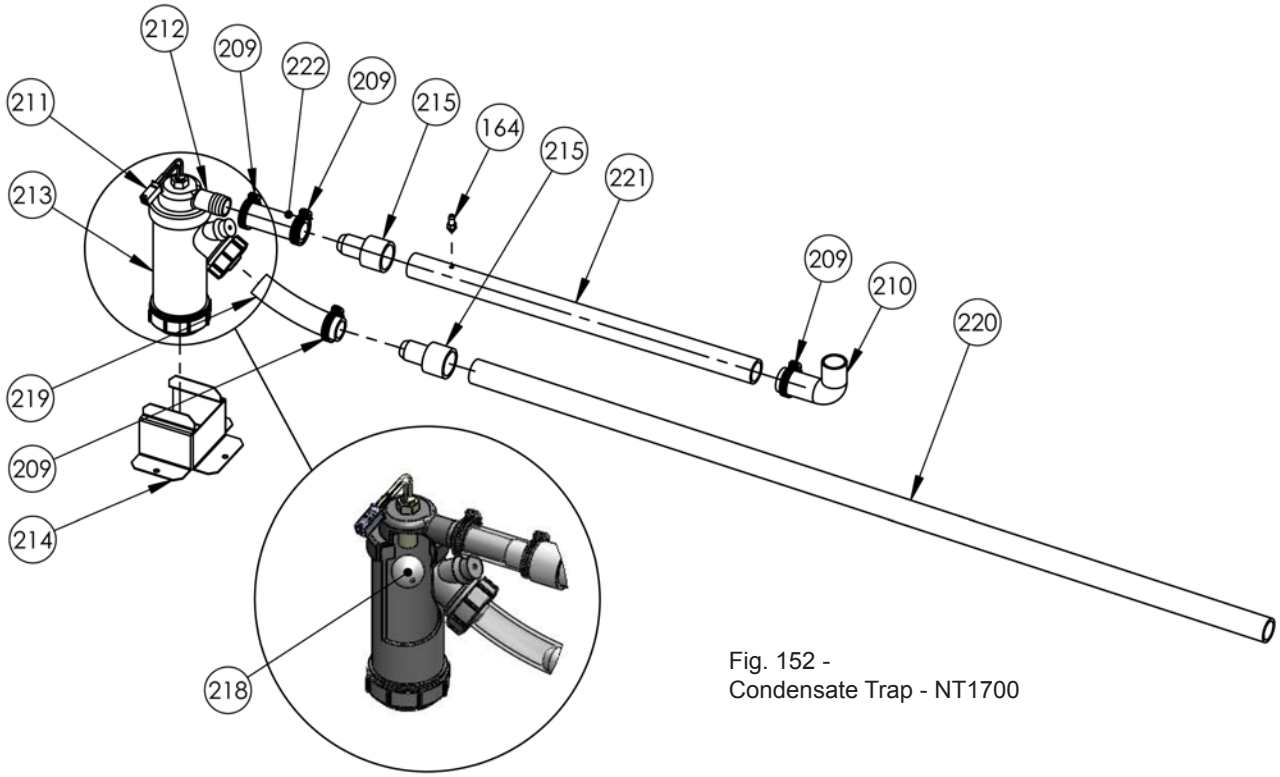

Fig. 152 -
Condensate Trap - NT1700

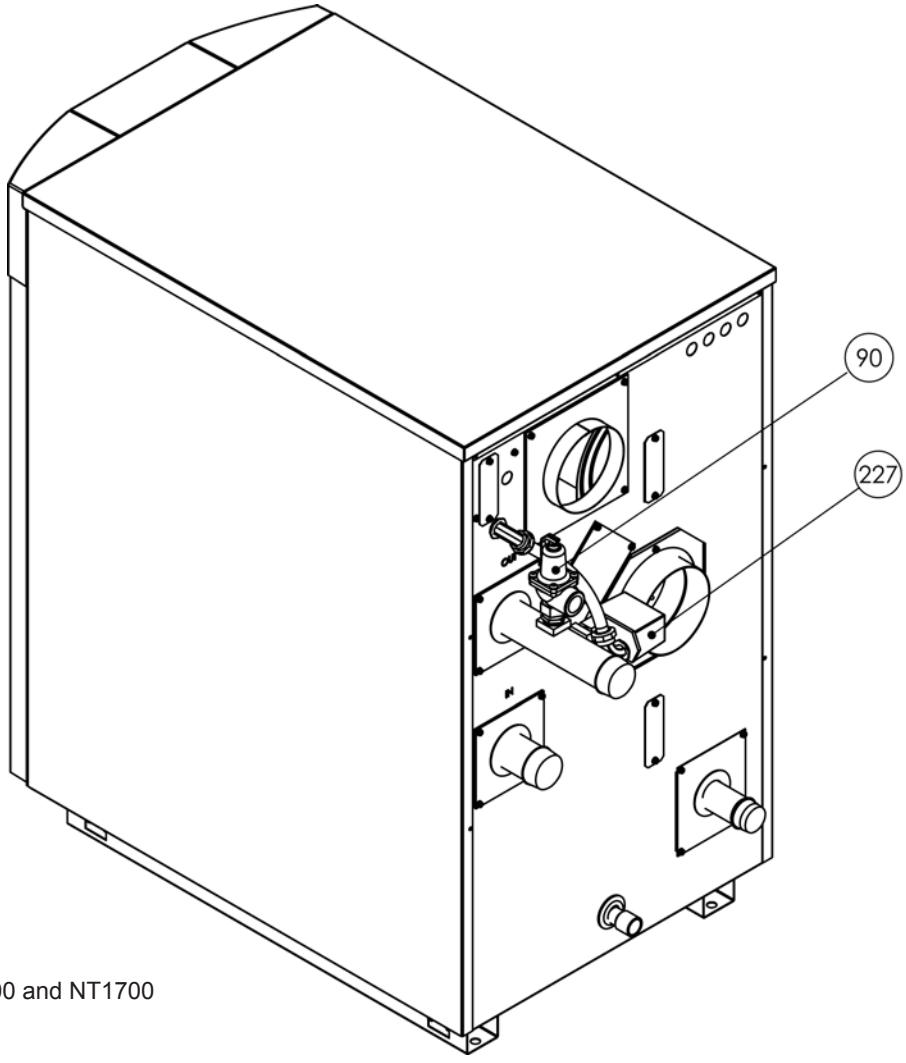

Fig. 153 -
Flow Switch - NT1000 and NT1700

This page intentionally left blank.

This page intentionally left blank.

Dimensions and specifications subject to change without notice in accordance with our policy of continuous product improvement.

H2352900B

LAARS®
Heating Systems Company
A subsidiary of BRADFORD WHITE® Corporation

800.900.9276 • Fax 800.559.1583 ***(Customer Service and Product Support)***
20 Industrial Way, Rochester, NH 03867 • 603.335.6300 • Fax 603.335.3355
1869 Sismet Road, Mississauga, Ontario, Canada L4W 1W8 • 905.238.0100 • Fax 905.366.0130
www.Laars.com

Printed in U.S.A. © Laars Heating Systems 1308 Document 1255B