Chilled Water Buffer Tank

Submittal Data

Vertical Models

BTV NB 24072
BTV N I 24072
BTV 2 B 24072
BTV 2 I 24072
BTV 3 B 24072
BTV 3 I 24072

	DESIGN NOTES
Code	ASME VIII-Div 1
Design Pressure	125 psi
Capacity	130 gallons
Weight	375 lbs
Supports	Base Ring

MATERIAL SPECIFICATIONS

- ☐ Carbon steel with red oxide primer painted exterior
- ☐ Carbon steel with R-16 insulating foam and topcoat
- ☐ Duplex stainless steel, bare
- ☐ Duplex stainless steel with R-16 insulating foam and topcoat
- ☐ 316L stainless steel, bare
- ☐ 316L stainless steel with R-16 insulating foam and topcoat

OPTIONS

- ☐ 150psi pressure rating
- ☐ Manway (12"x16")
- ☐ Hand hole (4"x6")

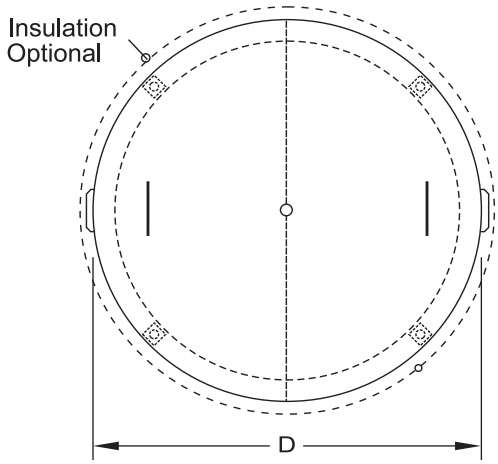

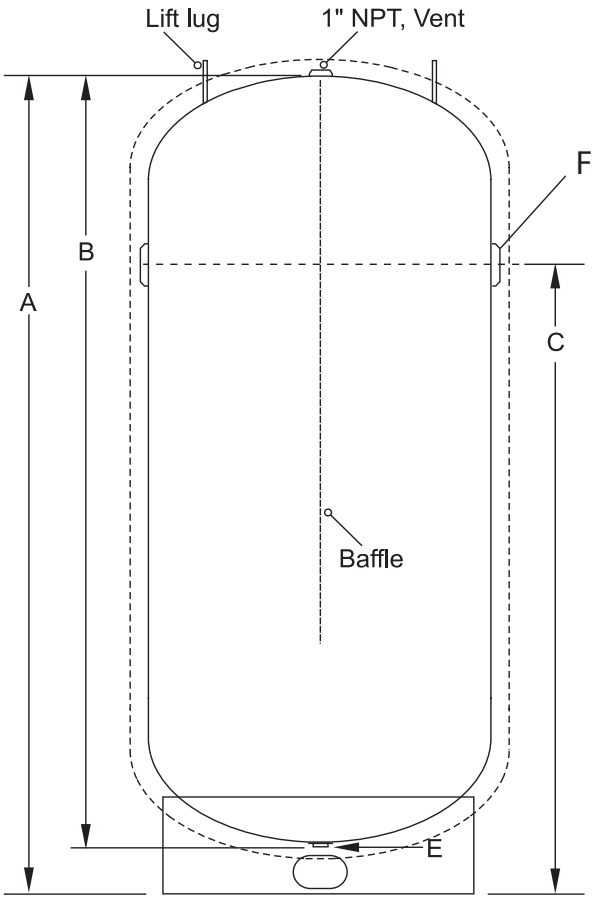

OPENINGS / HEIGHTS

MARK	DIM.	REFERENCE
A	76"	Overall Height*
B	72"	Tank Height
C	63 ½"	Connection Height
D	24"	Diameter*
E	1" NPT	Drain
F	2" NPT	Inlet / Outlet

*Foam / topcoat thickness is approximately 2¼"

NOTES

PROJECT

Customer	
Scale	Not to Scale
Date	
Customer P.O. #	

LAARS® Heating Systems Company
A subsidiary of BRADFORD WHITE® Corporation

Headquarters
20 Industrial Way, Rochester, NH 03867

Sales, Service
800.900.9276 • Fax 800-559-1583

Applications Engineering
603.335.6300 • Fax 603.335.3355

www.Laars.com

International Sales
9 Brigden Gate, Halton Hills, Ontario, Canada
L7G 0A3 (905)203-0600 Fax: (905) 636-0666

Litho in U.S.A. © Laars Heating Systems 22-01 Document 4219J

Chilled Water Buffer Tank

Submittal Data

Vertical Models

BTV N B 30075
BTV N I 30075
BTV 2 B 30075
BTV 2 I 30075
BTV 3 B 30075
BTV 3 I 30075

	DESIGN NOTES
Code	ASME VIII-Div 1
Design Pressure	125 psi
Capacity	210 gallons
Weight	425 lbs
Supports	Base Ring

MATERIAL SPECIFICATIONS

- ☐ Carbon steel with red oxide primer painted exterior
- ☐ Carbon steel with R-16 insulating foam and topcoat
- ☐ Duplex stainless steel, bare
- ☐ Duplex stainless steel with R-16 insulating foam and topcoat
- ☐ 316L stainless steel, bare
- ☐ 316L stainless steel with R-16 insulating foam and topcoat

OPTIONS

- ☐ 150psi pressure rating
- ☐ Manway (12"x16")
- ☐ Hand hole (4"x6")

OPENINGS / HEIGHTS

MARK	DIM.	REFERENCE
A	79"	Overall Height*
B	75"	Tank Height
C	65 ½"	Connection Height
D	30"	Diameter*
E	1" NPT	Drain
F	3"	Flanges

*Foam / topcoat thickness is approximately 2¼"

NOTES

PROJECT

Customer	
Scale	Not to Scale
Date	
Customer P.O. #	

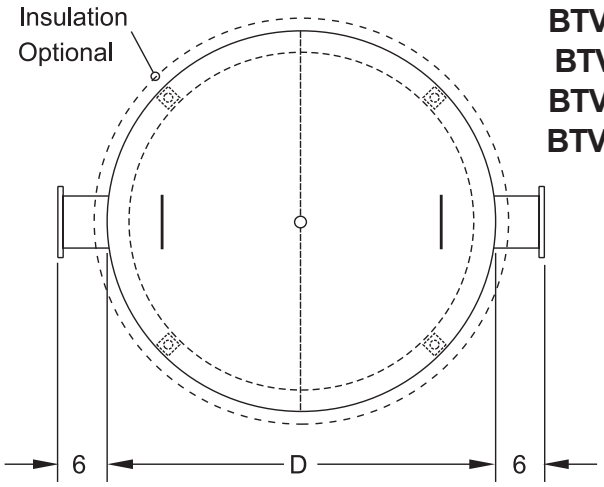

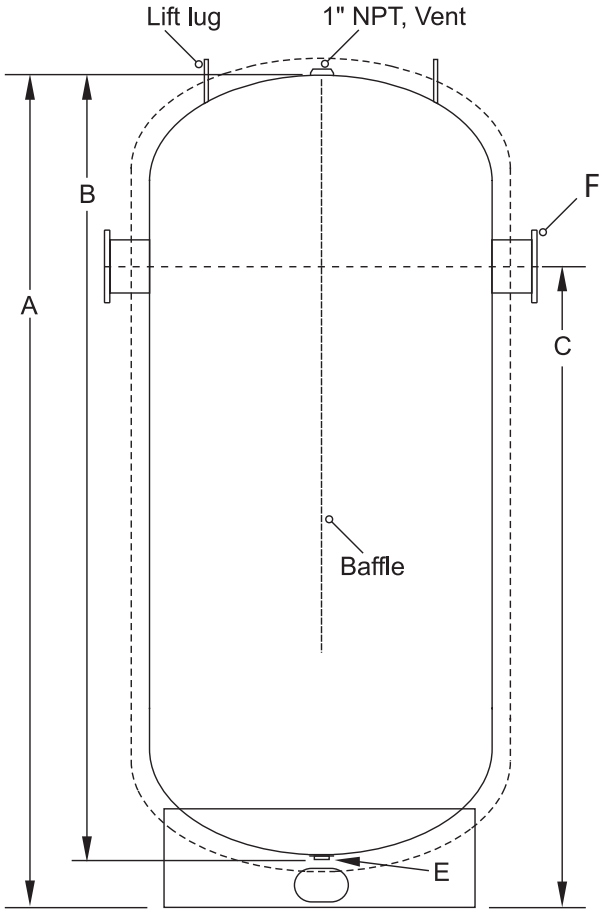

LAARS Heating Systems Company
A subsidiary of BRADFORD WHITE Corporation

Headquarters
20 Industrial Way, Rochester, NH 03867

Sales, Service
800.900.9276 • Fax 800-559-1583

Applications Engineering
603.335.6300 • Fax 603.335.3355

www.Laars.com

International Sales
9 Brigden Gate, Halton Hills, Ontario, Canada
L7G 0A3 (905)203-0600 Fax: (905) 636-0666

Litho in U.S.A. © Laars Heating Systems 22-01 Document 4219J

Chilled Water Buffer Tank

Submittal Data

Vertical Models

BTV NB 36072
BTV N I 36072
BTV 2 B 36072
BTV 2 I 36072
BTV 3 B 36072
BTV 3 I 36072

	DESIGN NOTES
Code	ASME VIII-Div 1
Design Pressure	125 psi
Capacity	300 gallons
Weight	633 lbs
Supports	Base Ring

MATERIAL SPECIFICATIONS

- ☐ Carbon steel with red oxide primer painted exterior
- ☐ Carbon steel with R-16 insulating foam and topcoat
- ☐ Duplex stainless steel, bare
- ☐ Duplex stainless steel with R-16 insulating foam and topcoat
- ☐ 316L stainless steel, bare
- ☐ 316L stainless steel with R-16 insulating foam and topcoat

OPTIONS

- ☐ 150psi pressure rating
- ☐ Manway (12"x16")
- ☐ Hand hole (4"x6")

OPENINGS / HEIGHTS

MARK	DIM.	REFERENCE
A	76"	Overall Height*
B	72"	Tank Height
C	59 ¾"	Connection Height
D	36"	Diameter*
E	1" NPT	Drain
F	4"	Flanges

*Foam / topcoat thickness is approximately 2¼"

NOTES

PROJECT

Customer	
Scale	Not to Scale
Date	
Customer P.O. #	

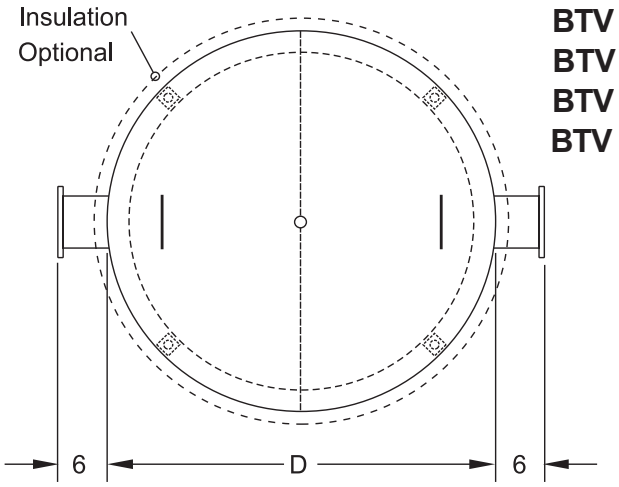

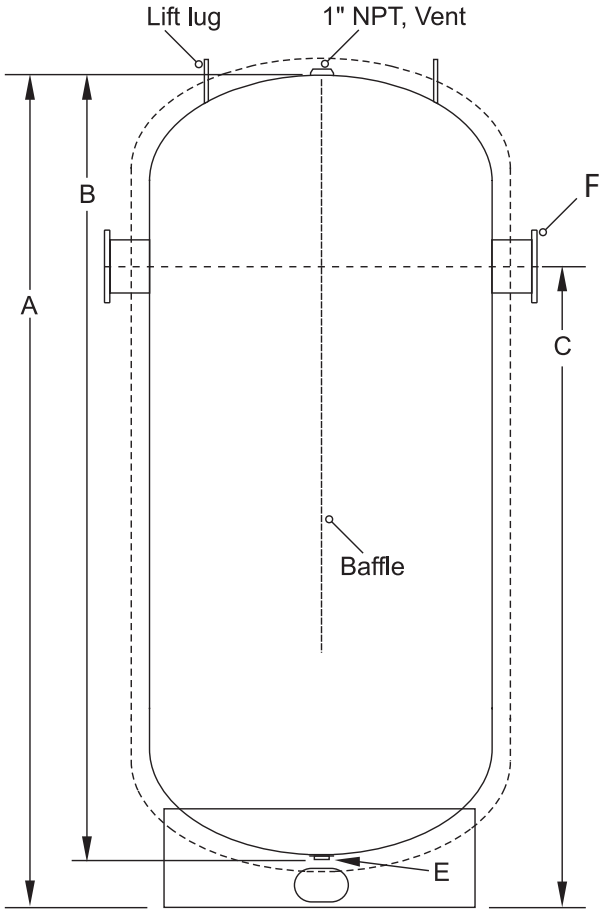

LAARS Heating Systems Company
A subsidiary of BRADFORD WHITE Corporation

Headquarters
20 Industrial Way, Rochester, NH 03867

Sales, Service
800.900.9276 • Fax 800-559-1583

Applications Engineering
603.335.6300 • Fax 603.335.3355

www.Laars.com

International Sales
9 Brigden Gate, Halton Hills, Ontario, Canada
L7G 0A3 (905)203-0600 Fax: (905) 636-0666

Litho in U.S.A. © Laars Heating Systems 22-01 Document 4219J

Chilled Water Buffer Tank

Submittal Data

Vertical Models

BTV NB 36090
BTV N I 36090
BTV 2 B 36090
BTV 2 I 36090
BTV 3 B 36090
BTV 3 I 36090

	DESIGN NOTES
Code	ASME VIII-Div 1
Design Pressure	125 psi
Capacity	360 gallons
Weight	715 lbs
Supports	Base Ring

MATERIAL SPECIFICATIONS

- ☐ Carbon steel with red oxide primer painted exterior
- ☐ Carbon steel with R-16 insulating foam and topcoat
- ☐ Duplex stainless steel, bare
- ☐ Duplex stainless steel with R-16 insulating foam and topcoat
- ☐ 316L stainless steel, bare
- ☐ 316L stainless steel with R-16 insulating foam and topcoat

OPTIONS

- ☐ 150psi pressure rating
- ☐ Manway (12"x16")
- ☐ Hand hole (4"x6")

OPENINGS / HEIGHTS

MARK	DIM.	REFERENCE
A	94"	Overall Height*
B	90"	Tank Height
C	77 ¾"	Connection Height
D	36"	Diameter*
E	1" NPT	Drain
F	4"	Flanges

*Foam / topcoat thickness is approximately 2¼"

NOTES

PROJECT

Customer	
Scale	Not to Scale
Date	
Customer P.O. #	

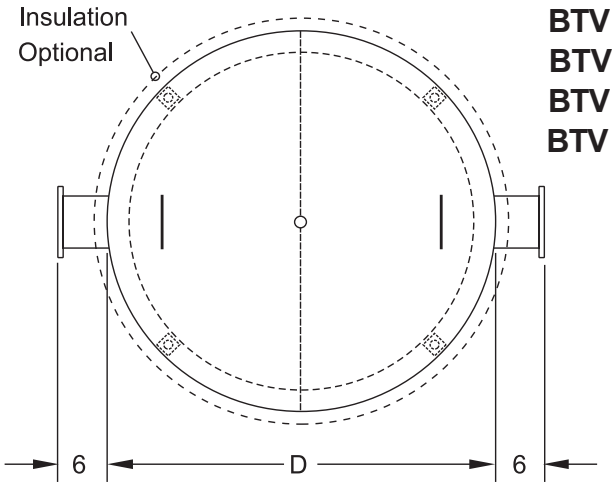

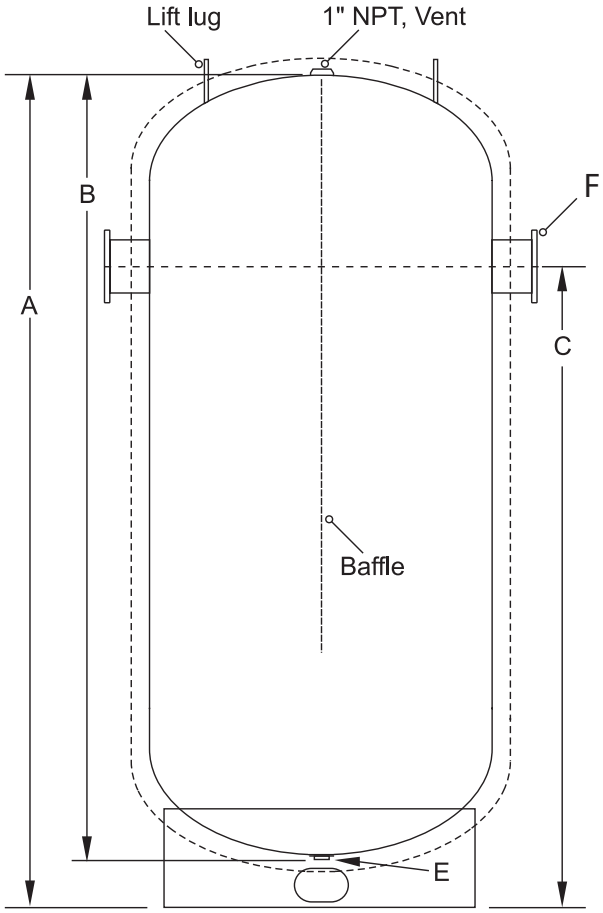

LAARS Heating Systems Company
A subsidiary of BRADFORD WHITE Corporation

Headquarters
20 Industrial Way, Rochester, NH 03867

Sales, Service
800.900.9276 • Fax 800-559-1583

Applications Engineering
603.335.6300 • Fax 603.335.3355

www.Laars.com

International Sales
9 Brigden Gate, Halton Hills, Ontario, Canada
L7G 0A3 (905)203-0600 Fax: (905) 636-0666

Litho in U.S.A. © Laars Heating Systems 22-01 Document 4219J

Chilled Water Buffer Tank

Submittal Data

Vertical Models

BTV NB 42072
BTV N I 42072
BTV 2 B 42072
BTV 2 I 42072
BTV 3 B 42072
BTV 3 I 42072

	DESIGN NOTES
Code	ASME VIII-Div 1
Design Pressure	125 psi
Capacity	380 gallons
Weight	1250 lbs
Supports	Base Ring

MATERIAL SPECIFICATIONS

- ☐ Carbon steel with red oxide primer painted exterior
- ☐ Carbon steel with R-16 insulating foam and topcoat
- ☐ Duplex stainless steel, bare
- ☐ Duplex stainless steel with R-16 insulating foam and topcoat
- ☐ 316L stainless steel, bare
- ☐ 316L stainless steel with R-16 insulating foam and topcoat

OPTIONS

- ☐ 150psi pressure rating
- ☐ Manway (12"x16")
- ☐ Hand hole (4"x6")

OPENINGS / HEIGHTS

MARK	DIM.	REFERENCE
A	76"	Overall Height*
B	72"	Tank Height
C	58 ¼"	Connection Height
D	42"	Diameter*
E	1" NPT	Drain
F	4"	Flanges

*Foam / topcoat thickness is approximately 2¼"

NOTES

PROJECT

Customer	
Scale	Not to Scale
Date	
Customer P.O. #	

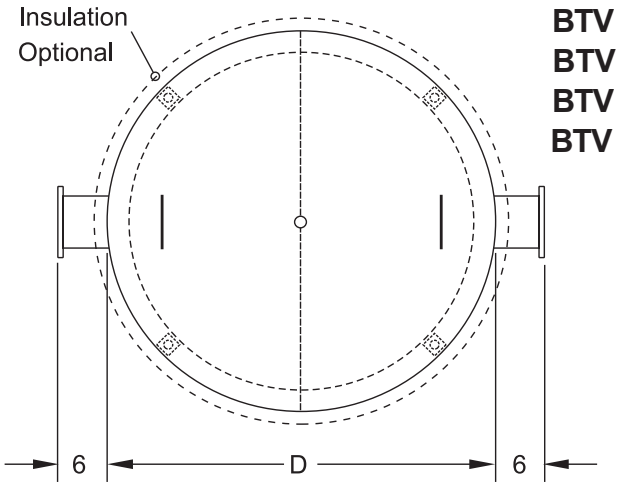

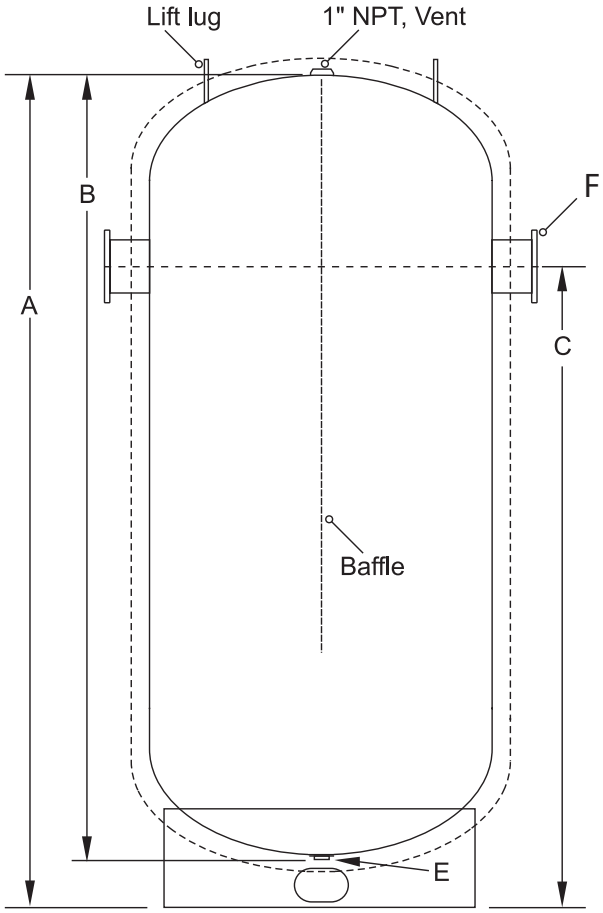

LAARS Heating Systems Company
A subsidiary of BRADFORD WHITE Corporation

Headquarters
20 Industrial Way, Rochester, NH 03867

Sales, Service
800.900.9276 • Fax 800-559-1583

Applications Engineering
603.335.6300 • Fax 603.335.3355

www.Laars.com

International Sales
9 Brigden Gate, Halton Hills, Ontario, Canada
L7G 0A3 (905)203-0600 Fax: (905) 636-0666

Litho in U.S.A. © Laars Heating Systems 22-01 Document 4219J

Chilled Water Buffer Tank

Submittal Data

Vertical Models

BTV NB 42084
BTV N I 42084
BTV 2 B 42084
BTV 2 I 42084
BTV 3 B 42084
BTV 3 I 42084

	DESIGN NOTES
Code	ASME VIII-Div 1
Design Pressure	125 psi
Capacity	460 gallons
Weight	1250 lbs
Supports	Base Ring

MATERIAL SPECIFICATIONS

- ☐ Carbon steel with red oxide primer painted exterior
- ☐ Carbon steel with R-16 insulating foam and topcoat
- ☐ Duplex stainless steel, bare
- ☐ Duplex stainless steel with R-16 insulating foam and topcoat
- ☐ 316L stainless steel, bare
- ☐ 316L stainless steel with R-16 insulating foam and topcoat

OPTIONS

- ☐ 150psi pressure rating
- ☐ Manway (12"x16")
- ☐ Hand hole (4"x6")

OPENINGS / HEIGHTS

MARK	DIM.	REFERENCE
A	88"	Overall Height*
B	84"	Tank Height
C	70 ¼"	Connection Height
D	42"	Diameter*
E	1" NPT	Drain
F	4"	Flanges

*Foam / topcoat thickness is approximately 2¼"

NOTES

PROJECT

Customer	
Scale	Not to Scale
Date	
Customer P.O. #	

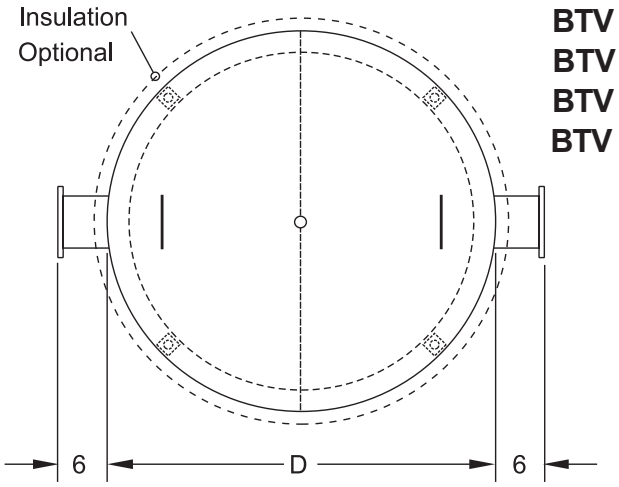

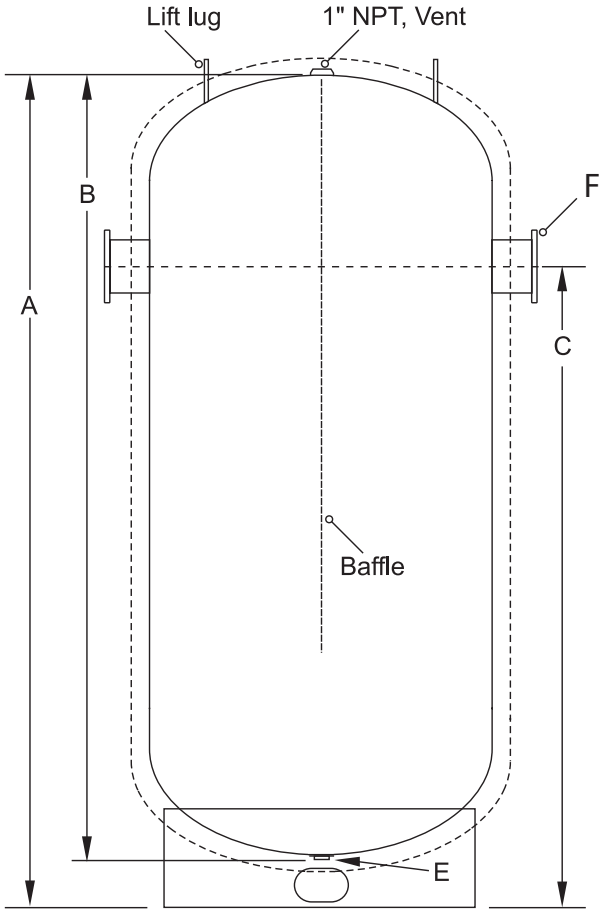

LAARS Heating Systems Company
A subsidiary of BRADFORD WHITE Corporation

Headquarters
20 Industrial Way, Rochester, NH 03867

Sales, Service
800.900.9276 • Fax 800-559-1583

Applications Engineering
603.335.6300 • Fax 603.335.3355

www.Laars.com

International Sales
9 Brigden Gate, Halton Hills, Ontario, Canada
L7G 0A3 (905)203-0600 Fax: (905) 636-0666

Litho in U.S.A. © Laars Heating Systems 22-01 Document 4219J

Chilled Water Buffer Tank

Submittal Data

Vertical Models

BTV NB 42090
BTV N I 42090
BTV 2 B 42090
BTV 2 I 42090
BTV 3 B 42090
BTV 3 I 42090

	DESIGN NOTES
Code	ASME VIII-Div 1
Design Pressure	125 psi
Capacity	500 gallons
Weight	1,300 lbs
Supports	Base Ring

MATERIAL SPECIFICATIONS

- ☐ Carbon steel with red oxide primer painted exterior
- ☐ Carbon steel with R-16 insulating foam and topcoat
- ☐ Duplex stainless steel, bare
- ☐ Duplex stainless steel with R-16 insulating foam and topcoat
- ☐ 316L stainless steel, bare
- ☐ 316L stainless steel with R-16 insulating foam and topcoat

OPTIONS

- ☐ 150psi pressure rating
- ☐ Manway (12"x16")
- ☐ Hand hole (4"x6")

OPENINGS / HEIGHTS

MARK	DIM.	REFERENCE
A	94"	Overall Height*
B	90"	Tank Height
C	76 ¼"	Connection Height
D	42"	Diameter*
E	1" NPT	Drain
F	4"	Flanges

*Foam / topcoat thickness is approximately 2¼"

NOTES

PROJECT

Customer	
Scale	Not to Scale
Date	
Customer P.O. #	

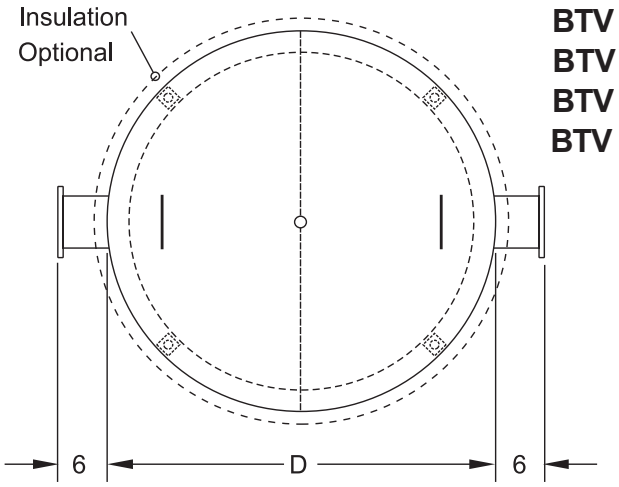

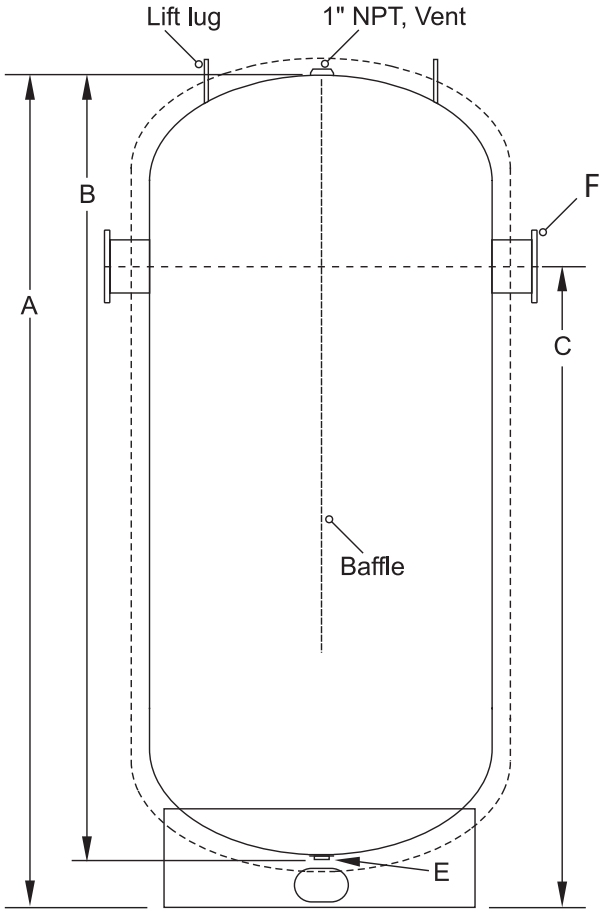

LAARS Heating Systems Company
A subsidiary of BRADFORD WHITE Corporation

Headquarters
20 Industrial Way, Rochester, NH 03867

Sales, Service
800.900.9276 • Fax 800-559-1583

Applications Engineering
603.335.6300 • Fax 603.335.3355

www.Laars.com

International Sales
9 Brigden Gate, Halton Hills, Ontario, Canada
L7G 0A3 (905)203-0600 Fax: (905) 636-0666

Litho in U.S.A. © Laars Heating Systems 22-01 Document 4219J

Chilled Water Buffer Tank

Submittal Data

Vertical Models

BTV NB 42100
BTV N I 42100
BTV 2 B 42100
BTV 2 I 42100
BTV 3 B 42100
BTV 3 I 42100

	DESIGN NOTES
Code	ASME VIII-Div 1
Design Pressure	125 psi
Capacity	550 gallons
Weight	1,425 lbs
Supports	Base Ring

MATERIAL SPECIFICATIONS

- ☐ Carbon steel with red oxide primer painted exterior
- ☐ Carbon steel with R-16 insulating foam and topcoat
- ☐ Duplex stainless steel, bare
- ☐ Duplex stainless steel with R-16 insulating foam and topcoat
- ☐ 316L stainless steel, bare
- ☐ 316L stainless steel with R-16 insulating foam and topcoat

OPTIONS

- ☐ 150psi pressure rating
- ☐ Manway (12"x16")
- ☐ Hand hole (4"x6")

OPENINGS / HEIGHTS

MARK	DIM.	REFERENCE
A	104"	Overall Height*
B	100"	Tank Height
C	85"	Connection Height
D	42"	Diameter*
E	1" NPT	Drain
F	4"	Flanges

*Foam / topcoat thickness is approximately 2¼"

NOTES

PROJECT

Customer	
Scale	Not to Scale
Date	
Customer P.O. #	

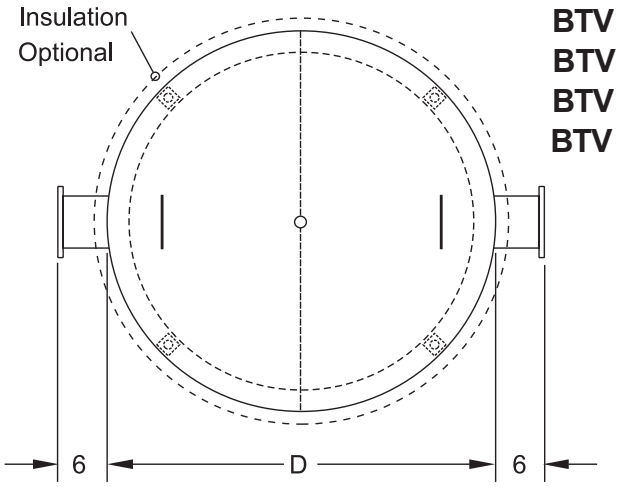

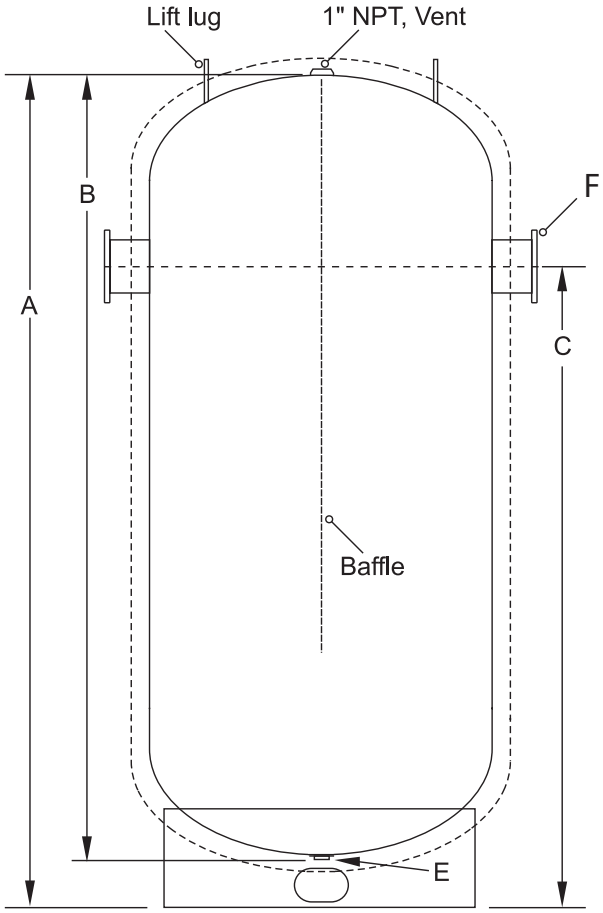

LAARS Heating Systems Company
A subsidiary of BRADFORD WHITE Corporation

Headquarters
20 Industrial Way, Rochester, NH 03867

Sales, Service
800.900.9276 • Fax 800-559-1583

Applications Engineering
603.335.6300 • Fax 603.335.3355

www.Laars.com

International Sales
9 Brigden Gate, Halton Hills, Ontario, Canada
L7G 0A3 (905)203-0600 Fax: (905) 636-0666

Litho in U.S.A. © Laars Heating Systems 22-01 Document 4219J

Chilled Water Buffer Tank

Submittal Data

Vertical Models

BTV NB 48073
BTV N I 48073
BTV 2 B 48073
BTV 2 I 48073
BTV 3 B 48073
BTV 3 I 48073

	DESIGN NOTES
Code	ASME VIII-Div 1
Design Pressure	125 psi
Capacity	500 gallons
Weight	1,150 lbs
Supports	Base Ring

MATERIAL SPECIFICATIONS

- ☐ Carbon steel with red oxide primer painted exterior
- ☐ Carbon steel with R-16 insulating foam and topcoat
- ☐ Duplex stainless steel, bare
- ☐ Duplex stainless steel with R-16 insulating foam and topcoat
- ☐ 316L stainless steel, bare
- ☐ 316L stainless steel with R-16 insulating foam and topcoat

OPTIONS

- ☐ 150psi pressure rating
- ☐ Manway (12"x16")
- ☐ Hand hole (4"x6")

OPENINGS / HEIGHTS

MARK	DIM.	REFERENCE
A	77"	Overall Height*
B	73"	Tank Height
C	56 ¼"	Connection Height
D	48"	Diameter*
E	1" NPT	Drain
F	6"	Flanges

*Foam / topcoat thickness is approximately 2¼"

NOTES

PROJECT

Customer	
Scale	Not to Scale
Date	
Customer P.O. #	

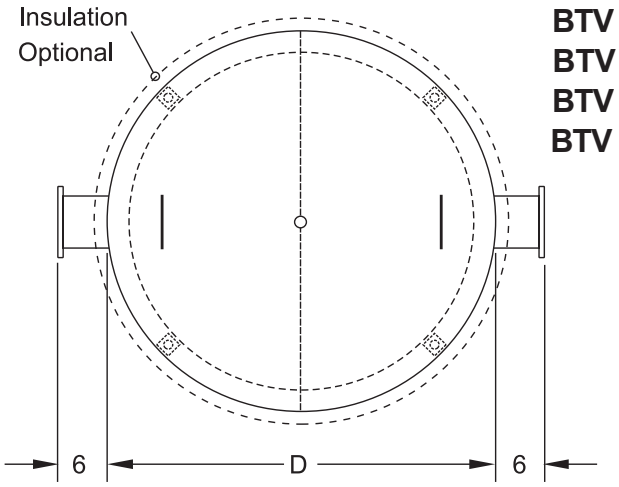

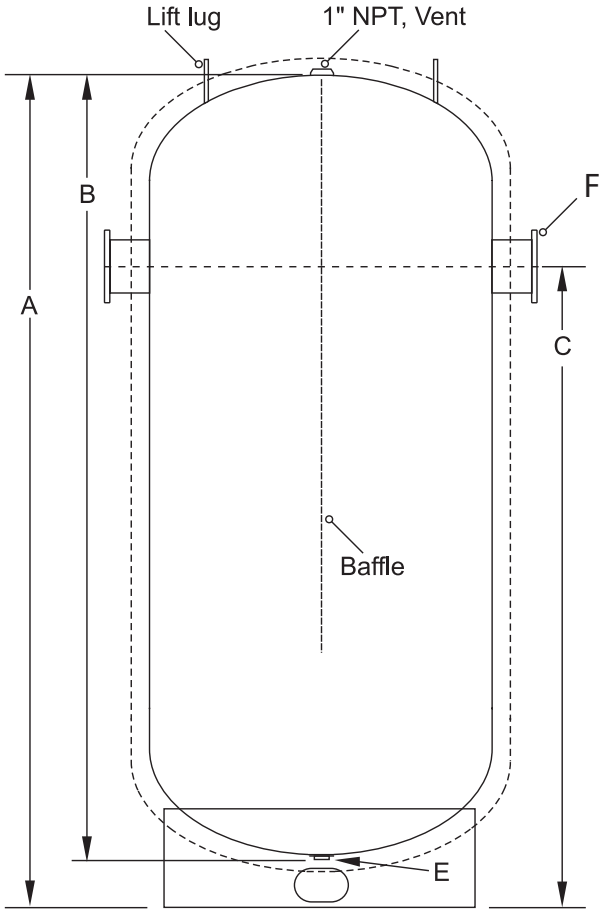

LAARS Heating Systems Company
A subsidiary of BRADFORD WHITE Corporation

Headquarters
20 Industrial Way, Rochester, NH 03867

Sales, Service
800.900.9276 • Fax 800-559-1583

Applications Engineering
603.335.6300 • Fax 603.335.3355

www.Laars.com

International Sales
9 Brigden Gate, Halton Hills, Ontario, Canada
L7G 0A3 (905)203-0600 Fax: (905) 636-0666

Litho in U.S.A. © Laars Heating Systems 22-01 Document 4219J

Chilled Water Buffer Tank

Submittal Data

Vertical Models

BTV NB 48084
BTV N I 48084
BTV 2 B 48084
BTV 2 I 48084
BTV 3 B 48084
BTV 3 I 48084

	DESIGN NOTES
Code	ASME VIII-Div 1
Design Pressure	125 psi
Capacity	588 gallons
Weight	1,425 lbs
Supports	Base Ring

MATERIAL SPECIFICATIONS

- ☐ Carbon steel with red oxide primer painted exterior
- ☐ Carbon steel with R-16 insulating foam and topcoat
- ☐ Duplex stainless steel, bare
- ☐ Duplex stainless steel with R-16 insulating foam and topcoat
- ☐ 316L stainless steel, bare
- ☐ 316L stainless steel with R-16 insulating foam and topcoat

OPTIONS

- ☐ 150psi pressure rating
- ☐ Manway (12"x16")
- ☐ Hand hole (4"x6")

OPENINGS / HEIGHTS

MARK	DIM.	REFERENCE
A	88"	Overall Height*
B	84"	Tank Height
C	64 ½"	Connection Height
D	48"	Diameter*
E	1" NPT	Drain
F	6"	Flanges

*Foam / topcoat thickness is approximately 2¼"

NOTES

PROJECT

Customer	
Scale	Not to Scale
Date	
Customer P.O. #	

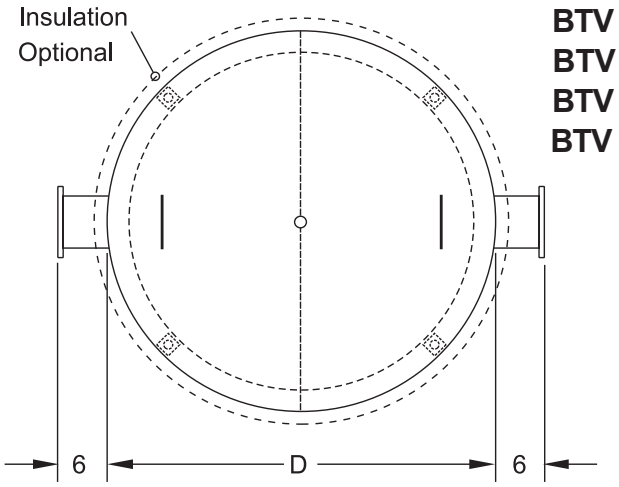

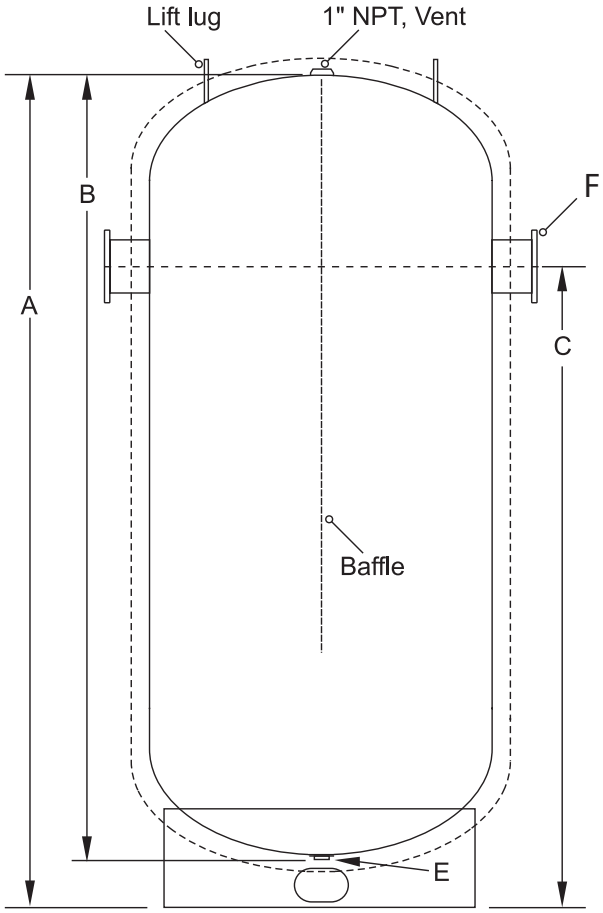

LAARS Heating Systems Company
A subsidiary of BRADFORD WHITE Corporation

Headquarters
20 Industrial Way, Rochester, NH 03867

Sales, Service
800.900.9276 • Fax 800-559-1583

Applications Engineering
603.335.6300 • Fax 603.335.3355

www.Laars.com

International Sales
9 Brigden Gate, Halton Hills, Ontario, Canada
L7G 0A3 (905)203-0600 Fax: (905) 636-0666

Litho in U.S.A. © Laars Heating Systems 22-01 Document 4219J

Chilled Water Buffer Tank

Submittal Data

Vertical Models

BTV NB 48096
BTV N I 48096
BTV 2 B 48096
BTV 2 I 48096
BTV 3 B 48096
BTV 3 I 48096

	DESIGN NOTES
Code	ASME VIII-Div 1
Design Pressure	125 psi
Capacity	675 gallons
Weight	1,885 lbs
Supports	Base Ring

MATERIAL SPECIFICATIONS

- ☐ Carbon steel with red oxide primer painted exterior
- ☐ Carbon steel with R-16 insulating foam and topcoat
- ☐ Duplex stainless steel, bare
- ☐ Duplex stainless steel with R-16 insulating foam and topcoat
- ☐ 316L stainless steel, bare
- ☐ 316L stainless steel with R-16 insulating foam and topcoat

OPTIONS

- ☐ 150psi pressure rating
- ☐ Manway (12"x16")
- ☐ Hand hole (4"x6")

OPENINGS / HEIGHTS

MARK	DIM.	REFERENCE
A	100"	Overall Height*
B	96"	Tank Height
C	79 ¼"	Connection Height
D	48"	Diameter*
E	1" NPT	Drain
F	6"	Flanges

*Foam / topcoat thickness is approximately 2¼"

NOTES

PROJECT

Customer	
Scale	Not to Scale
Date	
Customer P.O. #	

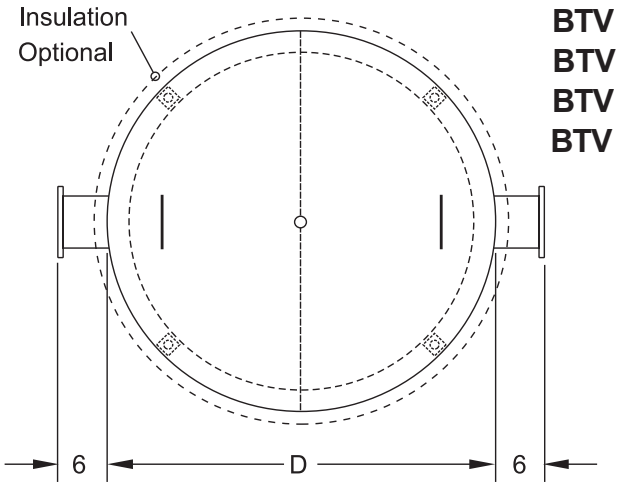

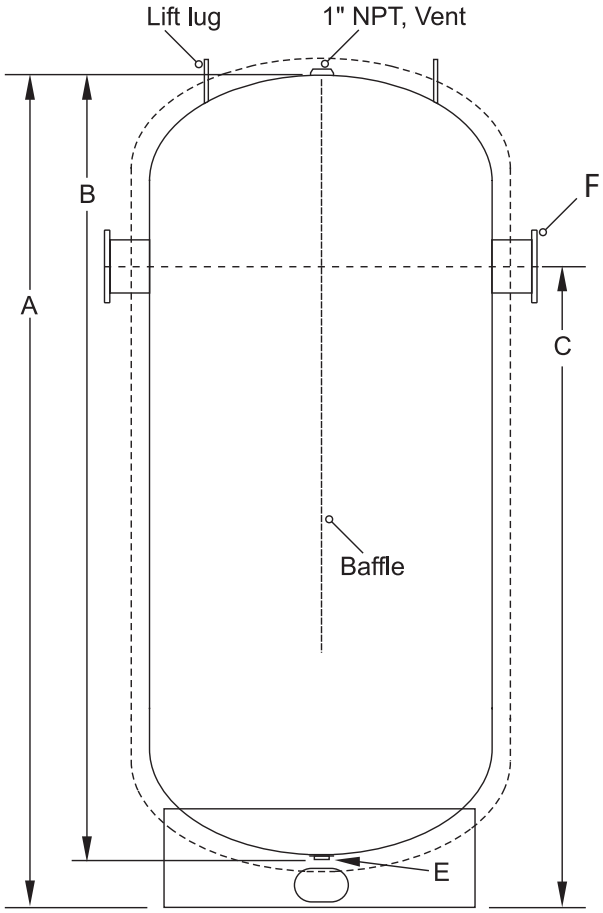

LAARS Heating Systems Company
A subsidiary of BRADFORD WHITE Corporation

Headquarters
20 Industrial Way, Rochester, NH 03867

Sales, Service
800.900.9276 • Fax 800-559-1583

Applications Engineering
603.335.6300 • Fax 603.335.3355

www.Laars.com

International Sales
9 Brigden Gate, Halton Hills, Ontario, Canada
L7G 0A3 (905)203-0600 Fax: (905) 636-0666

Litho in U.S.A. © Laars Heating Systems 22-01 Document 4219J

Chilled Water Buffer Tank

Submittal Data

Vertical Models

BTV NB 48141
BTV N I 48141
BTV 2 B 48141
BTV 2 I 48141
BTV 3 B 48141
BTV 3 I 48141

	DESIGN NOTES
Code	ASME VIII-Div 1
Design Pressure	125 psi
Capacity	1000 gallons
Weight	1957 lbs
Supports	Base Ring

MATERIAL SPECIFICATIONS

- ☐ Carbon steel with red oxide primer painted exterior
- ☐ Carbon steel with R-16 insulating foam and topcoat
- ☐ Duplex stainless steel, bare
- ☐ Duplex stainless steel with R-16 insulating foam and topcoat
- ☐ 316L stainless steel, bare
- ☐ 316L stainless steel with R-16 insulating foam and topcoat

OPTIONS

- ☐ 150psi pressure rating
- ☐ Manway (12"x16")
- ☐ Hand hole (4"x6")

OPENINGS / HEIGHTS

MARK	DIM.	REFERENCE
A	145"	Overall Height*
B	141"	Tank Height
C	124 ¼"	Connection Height
D	48"	Diameter*
E	1" NPT	Drain
F	6"	Flanges

*Foam / topcoat thickness is approximately 2¼"

NOTES

PROJECT

Customer	
Scale	Not to Scale
Date	
Customer P.O. #	

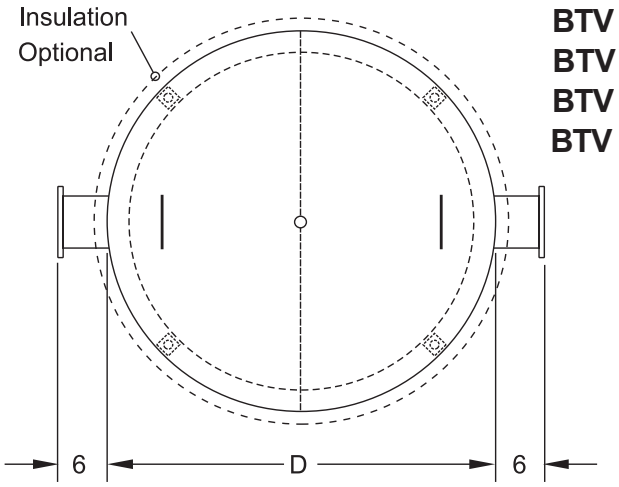

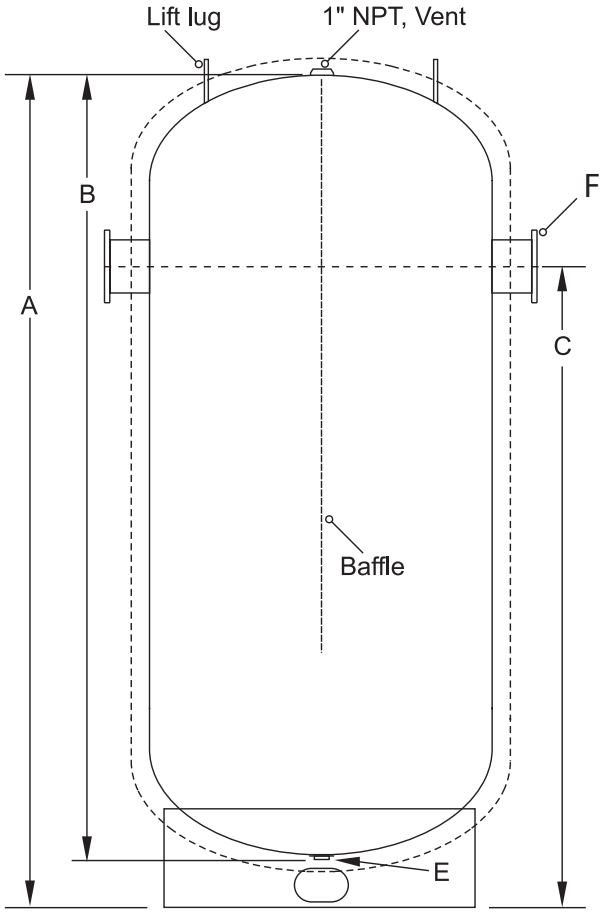

LAARS Heating Systems Company
A subsidiary of BRADFORD WHITE Corporation

Headquarters
20 Industrial Way, Rochester, NH 03867

Sales, Service
800.900.9276 • Fax 800-559-1583

Applications Engineering
603.335.6300 • Fax 603.335.3355

www.Laars.com

International Sales
9 Brigden Gate, Halton Hills, Ontario, Canada
L7G 0A3 (905)203-0600 Fax: (905) 636-0666

Litho in U.S.A. © Laars Heating Systems 22-01 Document 4219J

Chilled Water Buffer Tank

Submittal Data

Vertical Models

BTV NB 54096
BTV N I 54096
BTV 2 B 54096
BTV 2 I 54096
BTV 3 B 54096
BTV 3 I 54096

	DESIGN NOTES
Code	ASME VIII-Div 1
Design Pressure	125 psi
Capacity	850 gallons
Weight	1,630 lbs
Supports	Base Ring

MATERIAL SPECIFICATIONS

- ☐ Carbon steel with red oxide primer painted exterior
- ☐ Carbon steel with R-16 insulating foam and topcoat
- ☐ Duplex stainless steel, bare
- ☐ Duplex stainless steel with R-16 insulating foam and topcoat
- ☐ 316L stainless steel, bare
- ☐ 316L stainless steel with R-16 insulating foam and topcoat

OPTIONS

- ☐ 150psi pressure rating
- ☐ Manway (12"x16")
- ☐ Hand hole (4"x6")

OPENINGS / HEIGHTS

MARK	DIM.	REFERENCE
A	102"	Overall Height*
B	96"	Tank Height
C	79 ½"	Connection Height
D	54"	Diameter*
E	1" NPT	Drain
F	6"	Flanges

*Foam / topcoat thickness is approximately 2¼"

NOTES

PROJECT

Customer	
Scale	Not to Scale
Date	
Customer P.O. #	

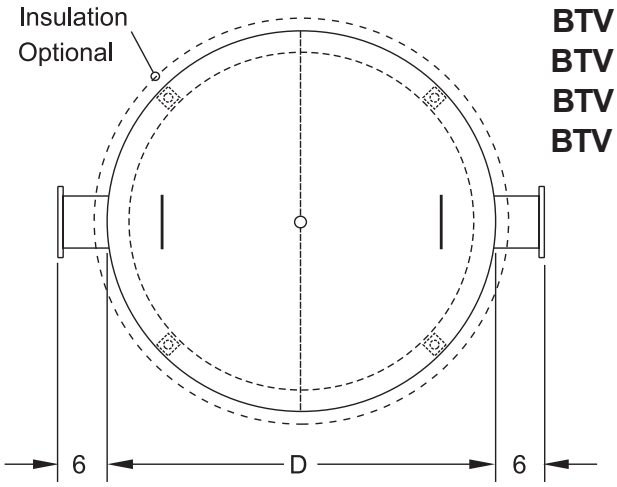

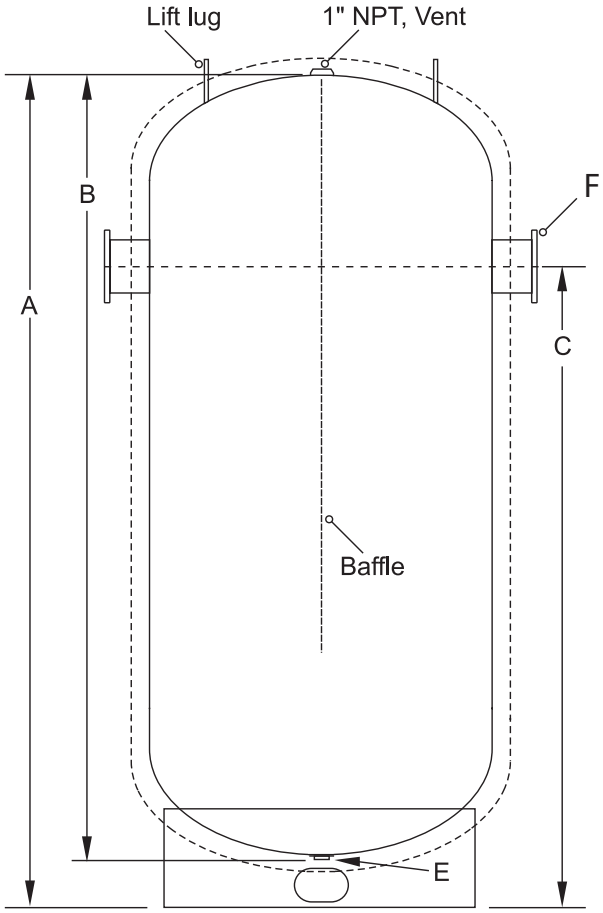

LAARS Heating Systems Company
A subsidiary of BRADFORD WHITE Corporation

Headquarters
20 Industrial Way, Rochester, NH 03867

Sales, Service
800.900.9276 • Fax 800-559-1583

Applications Engineering
603.335.6300 • Fax 603.335.3355

www.Laars.com

International Sales
9 Brigden Gate, Halton Hills, Ontario, Canada
L7G 0A3 (905)203-0600 Fax: (905) 636-0666

Litho in U.S.A. © Laars Heating Systems 22-01 Document 4219J

Chilled Water Buffer Tank

Submittal Data

Vertical Models

BTV NB 54147
BTV N I 54147
BTV 2 B 54147
BTV 2 I 54147
BTV 3 B 54147
BTV 3 I 54147

	DESIGN NOTES
Code	ASME VIII-Div 1
Design Pressure	125 psi
Capacity	1,350 gallons
Weight	2,800 lbs
Supports	Base Ring

MATERIAL SPECIFICATIONS

- ☐ Carbon steel with red oxide primer painted exterior
- ☐ Carbon steel with R-16 insulating foam and topcoat
- ☐ Duplex stainless steel, bare
- ☐ Duplex stainless steel with R-16 insulating foam and topcoat
- ☐ 316L stainless steel, bare
- ☐ 316L stainless steel with R-16 insulating foam and topcoat

OPTIONS

- ☐ 150psi pressure rating
- ☐ Manway (12"x16")
- ☐ Hand hole (4"x6")

OPENINGS / HEIGHTS

MARK	DIM.	REFERENCE
A	153"	Overall Height*
B	147"	Tank Height
C	132"	Connection Height
D	54"	Diameter*
E	1" NPT	Drain
F	6"	Flanges

*Foam / topcoat thickness is approximately 2¼"

NOTES

PROJECT

Customer	
Scale	Not to Scale
Date	
Customer P.O. #	

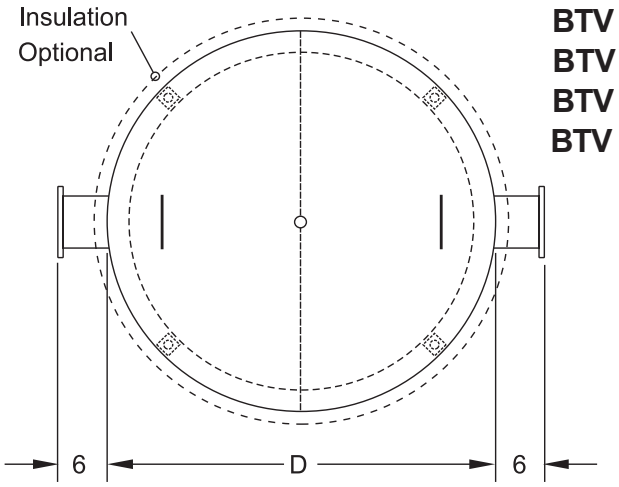

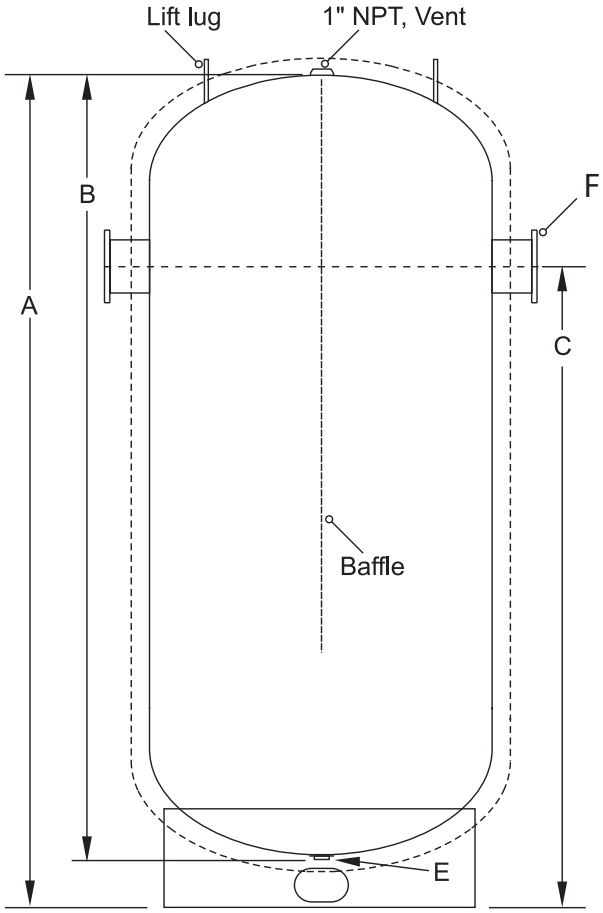

LAARS Heating Systems Company
A subsidiary of BRADFORD WHITE Corporation

Headquarters
20 Industrial Way, Rochester, NH 03867

Sales, Service
800.900.9276 • Fax 800-559-1583

Applications Engineering
603.335.6300 • Fax 603.335.3355

www.Laars.com

International Sales
9 Brigden Gate, Halton Hills, Ontario, Canada
L7G 0A3 (905)203-0600 Fax: (905) 636-0666

Litho in U.S.A. © Laars Heating Systems 22-01 Document 4219J

Chilled Water Buffer Tank

Submittal Data

Vertical Models

BTV NB 54165
BTV N I 54165
BTV 2 B 54165
BTV 2 I 54165
BTV 3 B 54165
BTV 3 I 54165

	DESIGN NOTES
Code	ASME VIII-Div 1
Design Pressure	125 psi
Capacity	1,530 gallons
Weight	3,100 lbs
Supports	Base Ring

MATERIAL SPECIFICATIONS

- ☐ Carbon steel with red oxide primer painted exterior
- ☐ Carbon steel with R-16 insulating foam and topcoat
- ☐ Duplex stainless steel, bare
- ☐ Duplex stainless steel with R-16 insulating foam and topcoat
- ☐ 316L stainless steel, bare
- ☐ 316L stainless steel with R-16 insulating foam and topcoat

OPTIONS

- ☐ 150psi pressure rating
- ☐ Manway (12"x16")
- ☐ Hand hole (4"x6")

OPENINGS / HEIGHTS

MARK	DIM.	REFERENCE
A	171"	Overall Height*
B	165"	Tank Height
C	147 ½"	Connection Height
D	54"	Diameter*
E	1" NPT	Drain
F	8"	Flanges

*Foam / topcoat thickness is approximately 2¼"

NOTES

PROJECT

Customer	
Scale	Not to Scale
Date	
Customer P.O. #	

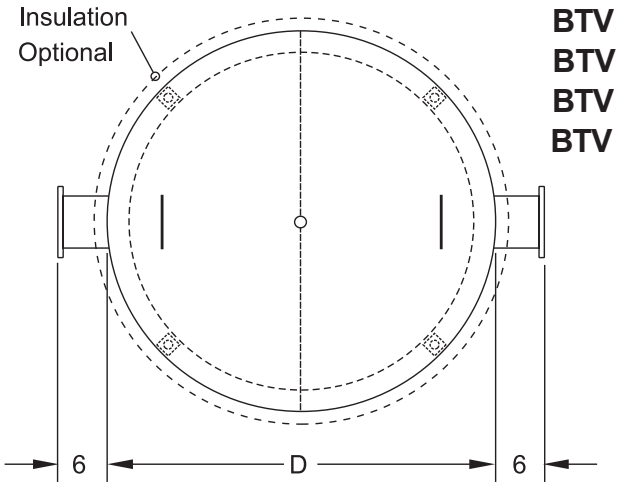

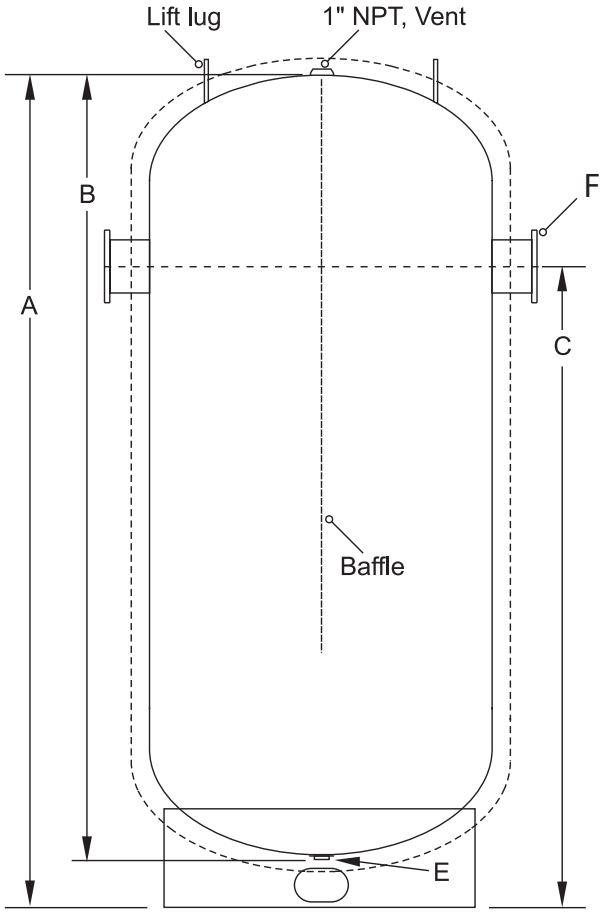

LAARS Heating Systems Company
A subsidiary of BRADFORD WHITE Corporation

Headquarters
20 Industrial Way, Rochester, NH 03867

Sales, Service
800.900.9276 • Fax 800-559-1583

Applications Engineering
603.335.6300 • Fax 603.335.3355

www.Laars.com

International Sales
9 Brigden Gate, Halton Hills, Ontario, Canada
L7G 0A3 (905)203-0600 Fax: (905) 636-0666

Litho in U.S.A. © Laars Heating Systems 22-01 Document 4219J

Chilled Water Buffer Tank

Submittal Data

Vertical Models

BTV NB 60096
BTV N I 60096
BTV 2 B 60096
BTV 2 I 60096
BTV 3 B 60096
BTV 3 I 60096

	DESIGN NOTES
Code	ASME VIII-Div 1
Design Pressure	125 psi
Capacity	1,040 gallons
Weight	2,280 lbs
Supports	Base Ring

MATERIAL SPECIFICATIONS

- ☐ Carbon steel with red oxide primer painted exterior
- ☐ Carbon steel with R-16 insulating foam and topcoat
- ☐ Duplex stainless steel, bare
- ☐ Duplex stainless steel with R-16 insulating foam and topcoat
- ☐ 316L stainless steel, bare
- ☐ 316L stainless steel with R-16 insulating foam and topcoat

OPTIONS

- ☐ 150psi pressure rating
- ☐ Manway (12"x16")
- ☐ Hand hole (4"x6")

OPENINGS / HEIGHTS

MARK	DIM.	REFERENCE
A	102"	Overall Height*
B	96"	Tank Height
C	76 ¾"	Connection Height
D	60"	Diameter*
E	1" NPT	Drain
F	8"	Flanges

*Foam / topcoat thickness is approximately 2¼"

NOTES

PROJECT

Customer	
Scale	Not to Scale
Date	
Customer P.O. #	

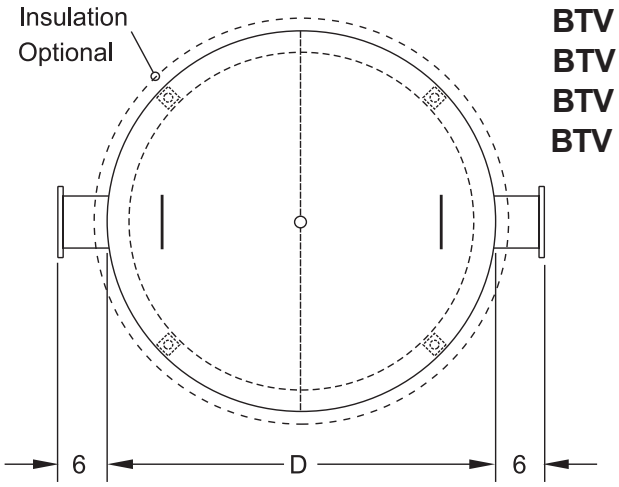

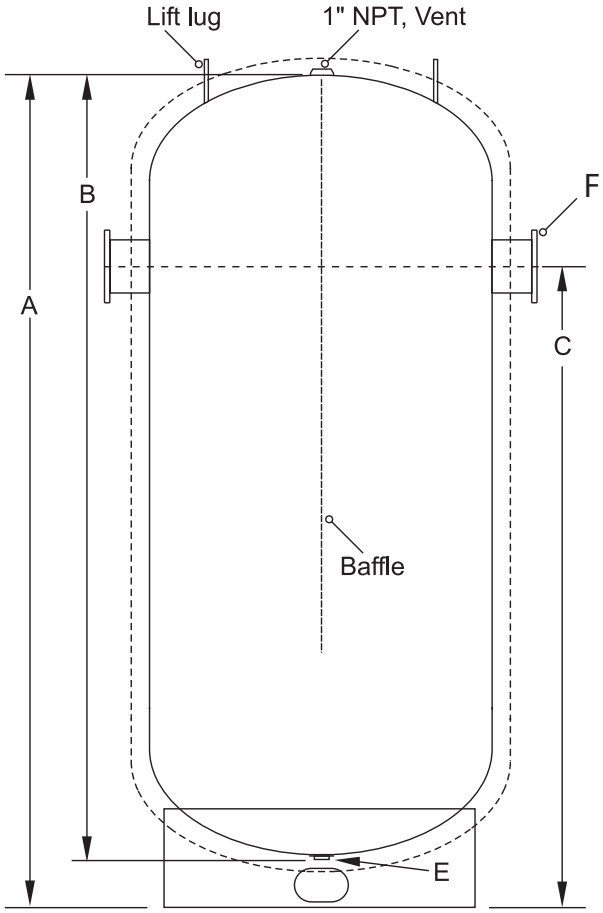

LAARS Heating Systems Company
A subsidiary of BRADFORD WHITE Corporation

Headquarters
20 Industrial Way, Rochester, NH 03867

Sales, Service
800.900.9276 • Fax 800-559-1583

Applications Engineering
603.335.6300 • Fax 603.335.3355

www.Laars.com

International Sales
9 Brigden Gate, Halton Hills, Ontario, Canada
L7G 0A3 (905)203-0600 Fax: (905) 636-0666

Litho in U.S.A. © Laars Heating Systems 22-01 Document 4219J

Chilled Water Buffer Tank

Submittal Data

Vertical Models

BTV NB 60135
BTV N I 60135
BTV 2 B 60135
BTV 2 I 60135
BTV 3 B 60135
BTV 3 I 60135

	DESIGN NOTES
Code	ASME VIII-Div 1
Design Pressure	125 psi
Capacity	1,500 gallons
Weight	3,375 lbs
Supports	Base Ring

MATERIAL SPECIFICATIONS

- ☐ Carbon steel with red oxide primer painted exterior
- ☐ Carbon steel with R-16 insulating foam and topcoat
- ☐ Duplex stainless steel, bare
- ☐ Duplex stainless steel with R-16 insulating foam and topcoat
- ☐ 316L stainless steel, bare
- ☐ 316L stainless steel with R-16 insulating foam and topcoat

OPTIONS

- ☐ 150psi pressure rating
- ☐ Manway (12"x16")
- ☐ Hand hole (4"x6")

OPENINGS / HEIGHTS

MARK	DIM.	REFERENCE
A	141"	Overall Height*
B	135"	Tank Height
C	114"	Connection Height
D	60"	Diameter*
E	1" NPT	Drain
F	8"	Flanges

*Foam / topcoat thickness is approximately 2¼"

NOTES

PROJECT

Customer	
Scale	Not to Scale
Date	
Customer P.O. #	

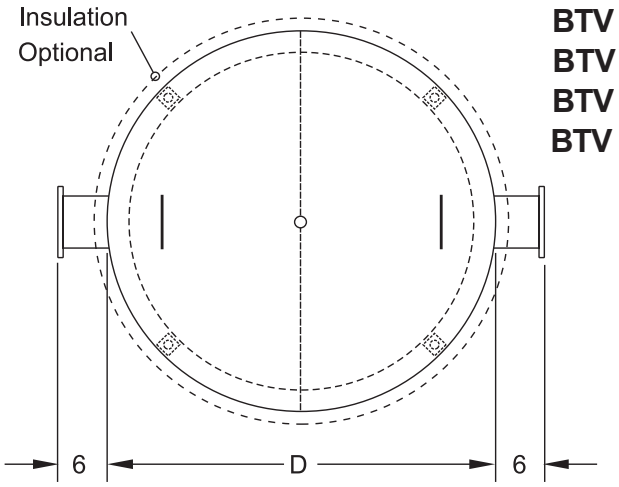

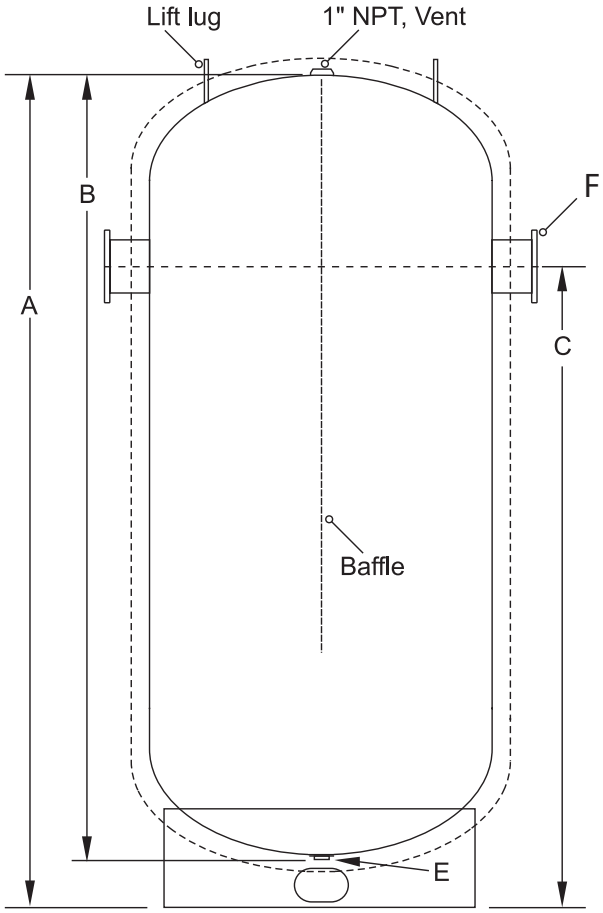

LAARS Heating Systems Company
A subsidiary of BRADFORD WHITE Corporation

Headquarters
20 Industrial Way, Rochester, NH 03867

Sales, Service
800.900.9276 • Fax 800-559-1583

Applications Engineering
603.335.6300 • Fax 603.335.3355

www.Laars.com

International Sales
9 Brigden Gate, Halton Hills, Ontario, Canada
L7G 0A3 (905)203-0600 Fax: (905) 636-0666

Litho in U.S.A. © Laars Heating Systems 22-01 Document 4219J

Chilled Water Buffer Tank

Submittal Data

Vertical Models

BTV NB 60177
BTV N I 60177
BTV 2 B 60177
BTV 2 I 60177
BTV 3 B 60177
BTV 3 I 60177

	DESIGN NOTES
Code	ASME VIII-Div 1
Design Pressure	125 psi
Capacity	2,000 gallons
Weight	4,225 lbs
Supports	Base Ring

MATERIAL SPECIFICATIONS

- ☐ Carbon steel with red oxide primer painted exterior
- ☐ Carbon steel with R-16 insulating foam and topcoat
- ☐ Duplex stainless steel, bare
- ☐ Duplex stainless steel with R-16 insulating foam and topcoat
- ☐ 316L stainless steel, bare
- ☐ 316L stainless steel with R-16 insulating foam and topcoat

OPTIONS

- ☐ 150psi pressure rating
- ☐ Manway (12"x16")
- ☐ Hand hole (4"x6")

OPENINGS / HEIGHTS

MARK	DIM.	REFERENCE
A	183"	Overall Height*
B	177"	Tank Height
C	155"	Connection Height
D	60"	Diameter*
E	1" NPT	Drain
F	8"	Flanges

*Foam / topcoat thickness is approximately 2¼"

NOTES

PROJECT

Customer	
Scale	Not to Scale
Date	
Customer P.O. #	

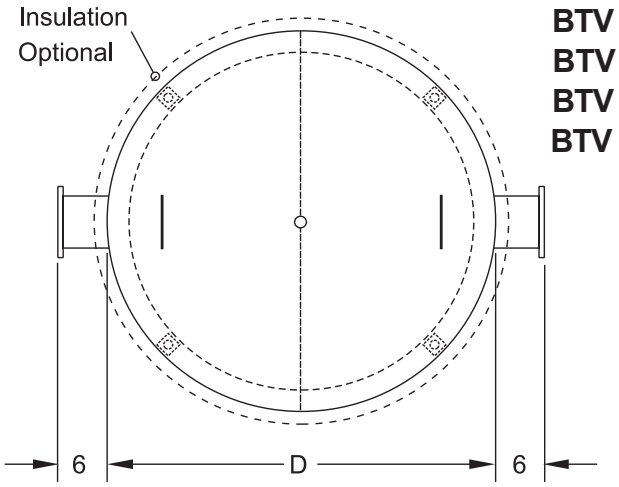

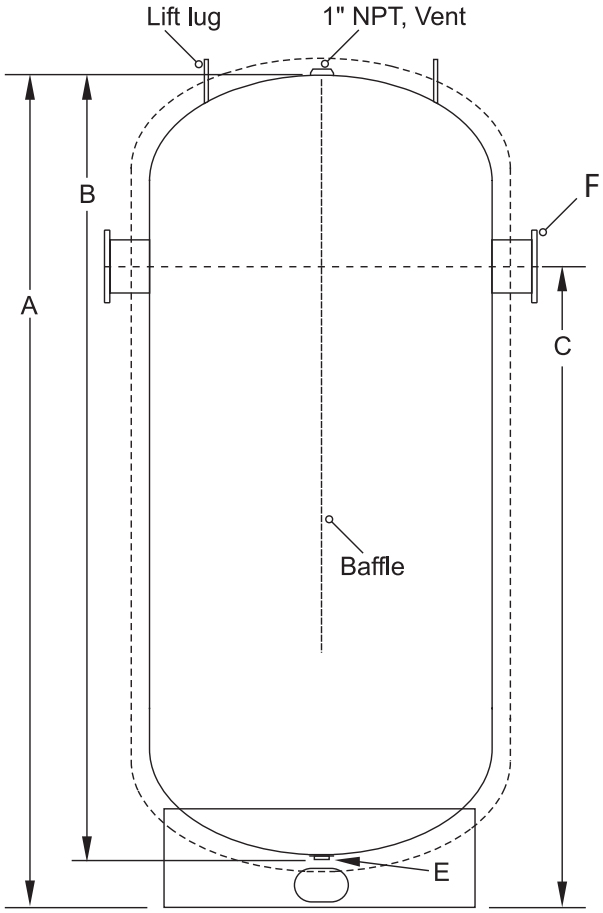

LAARS Heating Systems Company
A subsidiary of BRADFORD WHITE Corporation

Headquarters
20 Industrial Way, Rochester, NH 03867

Sales, Service
800.900.9276 • Fax 800-559-1583

Applications Engineering
603.335.6300 • Fax 603.335.3355

www.Laars.com

International Sales
9 Brigden Gate, Halton Hills, Ontario, Canada
L7G 0A3 (905)203-0600 Fax: (905) 636-0666

Litho in U.S.A. © Laars Heating Systems 22-01 Document 4219J