Section 12 - REPLACEMENT PARTS

Use only genuine replacement parts.

12.A General Information

To order or purchase parts, contact your nearest manufacturer's dealer or distributor. If they cannot supply you with what you need, contact Customer Service. (See the back cover for the address, telephone and fax numbers.)

12.B Parts List

ITEM	SIZE DESCRIPTION	SIZE BOILER 150 HEATER150	SIZE BOILER 210 HEATER 199	SIZE BOILER 285 HEATER 285	SIZE BOILER 399 HEATER 399	SIZE BOILER 500 HEATER 500	SIZE BOILER 600 HEATER 600	SIZE BOILER 750 HEATER 750	SIZE BOILER 850 HEATER 850
Jacket Components – *See Parts Illustration 1*									
1	Front Panel Assembly	R60D3200	R60D3200	R60D3200	R60D3201	R60D3202	R60D3202	R60D3202	R60D3202
2	Front Panel Handle	R50D3204	R50D3204	R50D3204	R50D3204	R50D3204	R50D3204	R50D3204	R50D3204
3	Front Panel (outdoor)	85D3200	85D3200	85D3200	85D3200	85D3200	85D3200	85D3200	85D3200
4	Hasp (outdoor)	1-546	1-546	1-546	1-546	1-546	1-546	1-546	1-546
12	Front Bezel	R50D7121	R50D7121	R50D7121	R50D7121	R50D7121	R50D7121	R50D7121	R50D7121
13	Touchscreen Display	E2339800	E2339800	E2339800	E2339800	E2339800	E2339800	E2339800	E2339800
Internal Components – *See Parts Illustration 3* and Parts Illustration 4									
20	Base Assembly	R15D1100	R15D1100	R30D1100	R40D1100	R50D1100	60D1100	75D1100	85D1100
21	Left Rear Support Stanchion	R50D1001	R50D1001	R50D1001	R50D1001	R50D1001	R50D1001	R50D1001	R50D1001
22	Left Front/Right Rear Support Stanchion	R50D1002	—	R50D1002 (2)	R50D1002 (2)	R50D1002 (2)	R50D1002 (2)	R50D1002 (2)	R50D1002
23	Cantilevered Base Stanchion	R15D1002	R40D1001	R40D1001	R40D1001	R40D1001	R50D1003	75D1002	75D1002
24	Brace, Front, HX Stanchion	20D1005	20D1005	85D1005	85D1005	85D1005	60D1005	85D1005	85D1005
24A	Brace, Rear, HX Stanchion	20D1007	20D1007	R50D1005	85D1005	85D1005	85D1005	85D1005	85D1005
25	Mounting Rail	R15D1004 (2)	R30D1004 (2)	R30D1004 (2)	40D1004 (2)	R50D1004 (2)	R50D1004 (2)	75D1004 (2)	85D1004 (2)
26A	Diagonal Brace	—	—	— (2)	— (2)	—	—	75D1006	75D1006
27	Condensate Trap Assy	R20D4020	R20D4020	R50D4020	R50D4020	R50D4020	R2075701	R2075701	R2075701
28	Heat Exch. Rail Clip	—	—	R50D1006 (2)	—	—	—	—	—
30	PVC Reducer	RP2053000	RP2053000	RP2052900	RP2052800	50D4027	RP2052800	RP2052800	RP2052800
30a	CPVC Reducer or Coupling	RP2065600	RP2065600	—	—	—	—	—	—
30b	2" Dia. Pipe, CPVC	RD2010213	RD2010213 Heater RD2010213 Boiler	—	—	—	—	—	—
31	Hose Barbed Adapter	RP2056100	RP2056100	RP2056100	—	—	—	—	—
33	Air Inlet/Exhaust Bracket	R20D3120	R20D3120	30D3505	40D3005	85D3005	85D3005	85D3005	85D3005
Gas Train Components – *See Parts Illustration 5 and Parts Illustration 6*									
40	Combustion Air Blower	RA2107500	RA2114200	RA2114200	RA2113100	RA2113100	R2012101	R2012101	R2012101
41	Gas Valve/Venturi	RV2017902	RV2017903	RV2017904	—	—	—	—	—
42	Gas Valve	—	—	—	RV2019200	V2019600	V2018500	V2018500	V2018500

ITEM	DESCRIPTION	SIZE BOILER 150 HEATER 150	SIZE BOILER 210 HEATER 199	SIZE BOILER 285 HEATER 285	SIZE BOILER 399 HEATER 399	SIZE BOILER 500 HEATER 500	SIZE BOILER 600 HEATER 600	SIZE BOILER 750 HEATER 750	SIZE BOILER 850 HEATER 850
43	Gas/Air Venturi	—	—	—	—	RA2116700	A2115000	A2115000	A2115000
44	Manual Gas Valve	—	—	—	RV2000200	V2003000 (2)	V2003000	V2003200	V2003200
44A	Manual Gas Valve	—	—	—	—	RV2000200	—	V2003000	V2003000
45	Gas Valve Flange Kit	—	—	—	—	RP2050100	RP2050100	RP2050100	RP2050100
46	Gas Valve/Venturi Cork Gasket	—	—	—	—	RS2104900	RS2104900	RS2104900	RS2104900
47	Gas Valve O-Ring	R30-227	R30-227	R30-227	—	—	—	—	—
48	Venturi O-Ring	—	—	—	RS2105200	RS2105200	RS2105200	RS2105200	RS2105200
49	High Gas Pressure Switch	—	—	—	—	R50D5014	R50D5013	R75D5014	R75D5014
50	Low Gas Pressure Switch	—	—	—	—	R50D5015	R50D5012	R75D5015	R75D5015
51	Duct/Venturi Transition	R10D5021	R10D5013	R30D5013	—	R50D5017	R60D5052	R60D5052	R85D5052
52	Gas Supply Pipe	RP2051400	RP2051400	RP2051500	P2054300	P2054300	P2054300	P2064200	P2064200
53	Gas Pipe, 3/4" NPT Formed Nipple	—	—	—	RP2056500	—	—	—	—
55	Air Inlet Flex Hose	RD0091403	D0091401	D0091401	RD0091202	D0091301	RD0091201	RD0091203	RD0091203
56	Air Inlet Collector	—	—	—	RV2019400	—	—	—	—
57	Electrical Connector w/Cable	—	—	—	RE2331700	RE2331700	—	—	—
58	Elbow Adapter	—	—	—	RV2019300	RV2019300	—		
59	Blower Gasket W/Fasteners	—	—	—	—	—	RS2107500	RS2107500	RS2107500
Heat Exchanger Components – *See Parts Illustration 7*									
60	Heat Exchanger, Boiler	RS2105800	RS2111000	RS2111100	RS2111200	RS2111300	RS2111300	RS2111400	RS2111500
	Heat Exchanger, Heater	RS2105800	RS2111000	RS2111100	RS2111200	RS2111300	RS2111310	RS2111400	RS2111500
61	Pump Assy, Boiler	R10D4110	R20D4140	RA2112230	RA2112230	RA2112229	—	—	—
61	Pump Assy, Heater	RA2120600	RA2120700	RA2120800	RA2120800	RA2120800	—	—	RS2105800
62	Low Water Cutoff Switch	CA004805	CA004805	CA004804	CA015604	RE2076500	RE2076500	RE2076500	RE2076500
63	Inlet Water Temp Sensor	RE2320600	RE2320600	RE2320600	RE2320600	RE2320600	RE2320600	RE2320600	RE2320600
64	Duplex Outlet Water Temperature Sensor	RE2319900	RE2319900	RE2319900	RE2319900	RE2319900	RE2319900	RE2319900	RE2319900
65	Duplex Stack Temperature Sensor	RE2319700	RE2319700	RE2319800	RE2319800	RE2319800	RE2319800	RE2319800	RE2319800
66	Pressure Relief Valve, Boiler	R51-182 (30 PSI)	R51-182 (30 PSI)	RA2113602 (75 PSI)	RA2113602 (75 PSI)	RA2113602 (75 PSI)	RA2113602 (75 PSI)	RA2113602 (75 PSI)	RA2113602 (75 PSI)
	Pressure Relief Valve, Heater	A2114802 (125 PSI)	A2114802 (125 PSI)	A2114802 (125 PSI)	A2114802 (125 PSI)	A2114802 (125 PSI)	A2114802 (125 PSI)	A2114802 (125 PSI)	A2114802 (125 PSI)
67	Air Vent	R1-592	R1-592	R1-592	R1-592	R1-592	R1-592	R1-592	R1-592
68	Burner Door w/gasket	RS2112801	RS2112801	RS2112801	RS2112801	RS2112801	RS2112801	RS2115301	RS2115301
68A	Gasket-only (rubber only)	R2069400	R2069400	R2069400	R2069400	R2069400	R2069400	R2077400	R2077400
69	Burner Gasket	RS2108500	RS2108500	RS2108500	RS2108500	RS2108500	RS2108500	S2113000	S2113000
69A	Gasket Set (burner gasket, ignitor gasket, sensor gasket & rubber door gasket)	RS2109100	RS2109100	RS2109100	RS2109100	RS2109100	RS2109100	R2077600	R2077600
70	Front Refractory Tile	RT2109001	RT2109001	RT2109001	RT2109001	RT2109001	RT2109001	T2110300	T2110300
71	Rear Refractory Tile	R50D2021	R50D2021	R50D2021	R50D2021	R50D2021	R50D2021	R50D2021	R50D2021
72	Main Burner w/gasket	R2069103	R2069104	R2069105	R2069106	R2069106	R2069107	R2069108	R2069109
73	Flame Sensor w/gasket	R2069200	R2069200	R2069200	R2069200	R2069200	R2069200	R2071400	R2071400

ITEM	DESCRIPTION	SIZE BOILER 150 HEATER 150	SIZE BOILER 210 HEATER 199	SIZE BOILER 285 HEATER 285	SIZE BOILER 399 HEATER 399	SIZE BOILER 500 HEATER 500	SIZE BOILER 600 HEATER 600	SIZE BOILER 750 HEATER 750	SIZE BOILER 850 HEATER 850
74	Ignitor w/gasket	R2069300	R2069300	R2069300	R2069300	R2069300	R2069300	R2071500	R2071500
74A	Ignitor Gasket	RW2013300	RW2013300	RW2013300	RW2013300	RW2013300	RW2013300	RW2013300	RW2013300
74B	Screw, Ignitor/ Flame Sensor	m4-.7X8mm S2112700	m4-.7X8mm S2112700	m4-.7X8mm S2112700	m4-.7X8mm S2112700	m4-.7X8mm S2112700	m4-.7X8mm S2112700	m4-.7X8mm S2112700	m4-.7X8mm S2112700
74C	Flame/Sensor Gasket	RW2013400	RW2013400	RW2013400	RW2013400	RW2013400	RW2013400	RW2013400	RW2013400
75	Air/Gas Channel (80-600)	RS2108600	RS2108700	RS2108700	RS2108700	RS2108801	RS2108801	—	—
	Air Adapter (750-850)	—	—	—	—	—	—	RS2115400	RS2115400
75A	Screw, Air/Gas Channel	RS2109400 (5)	RS2109400 (5)	RS2109400 (5)	RS2109400 (5)	RS2109400 (5)	RS2109400 (5)	RF2029200 (5)	RF2029200 (5)
76	Drain	R10-143	R10-143	R10-143	R10-143	R10-143	R10-143	R10-143	R10-143
77	Sight Glass	R50D2020	R50D2020	R50D2020	R50D2020	R50D2020	R50D2020	R50D2020	R50D2020
Electrical Components – *See Parts Illustration 8*									
80	Control Panel Enclosure	R50D7001	R50D7001	R50D7001	R50D7001	R50D7001	R50D7001	R50D7001	R50D7001
81	Transformer	RE2108700	RE2108700	RE2108700	RE2108700	RE2108700	RE2108700	RE2108700	RE2108700
82	High Voltage Shield	R50D7002	R50D7002	R50D7002	R50D7002	R50D7002	R50D7002	R50D7002	R50D7002
83	Top Panel Bracket	R50D7003	R50D7003	R50D7003	R50D7003	R50D7003	R50D7003	R50D7003	R50D7003
84	Electronic Control Module, Standard	*Contact Customer Service at 800 900-9276 x71*							
84	Electronic Control Module, CSD-1	*Contact Customer Service at 800 900-9276 x71*							
85	Rocker Switch	RE2322700	RE2322700	RE2322700	RE2322700	RE2322700	RE2322700	RE2322700	RE2322700
86	Onn / Off (outdoor)	E2349900	E2349900	E2349900	E2349900	E2349900	E2349900	E2349900	E2349900
87	Wire Harness	R50D7412	R50D7414	R50D7408	R50D7406	R50D7402	R50D7410	R50D7409	R50D7409
89	Air Pressure Switch	RE2334700	RE2334701	RE2334700	—	RE2334700	RE2334700	RE2334701	RE2334700
90	Water Flow Switch	—	—	—	R2008400	R2008400	R2008400	R2008400	R2008400
91	Thermo Switch			RE2353601	RE2353601	RE2353601	RE2353601	RE2353601	RE2353601
92	Thermo Fuse (back)			RE2354000	RE2354000	RE2354000	RE2354000	RE2354000	RE2354000

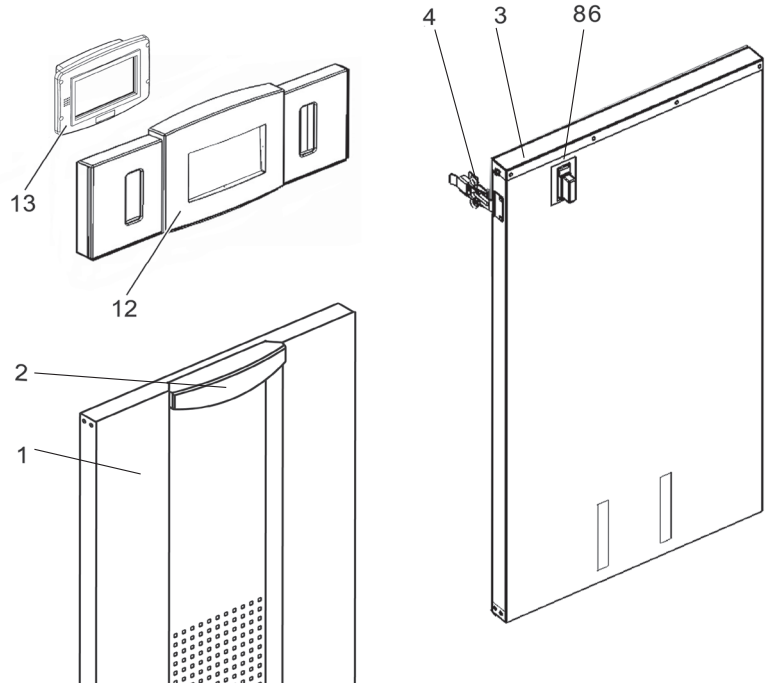

Parts Illustration 1. Jacket Components

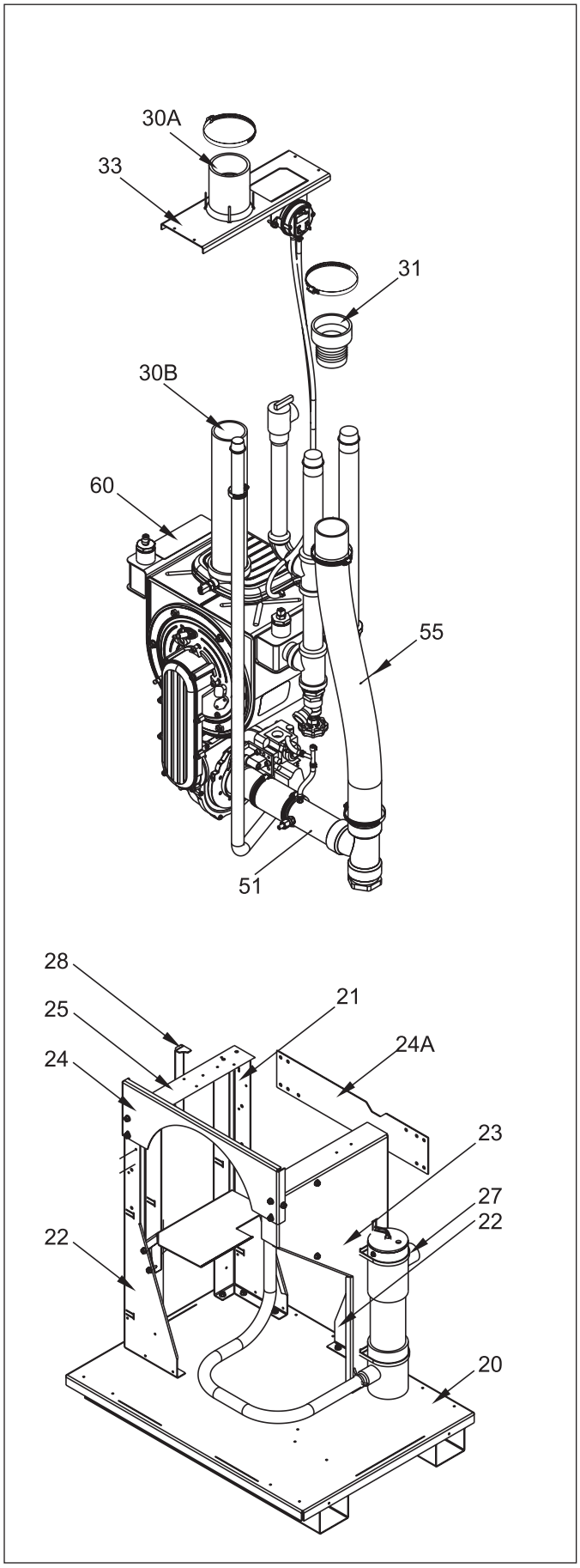

Parts Illustration 2. Internal Components, Sizes 150–210

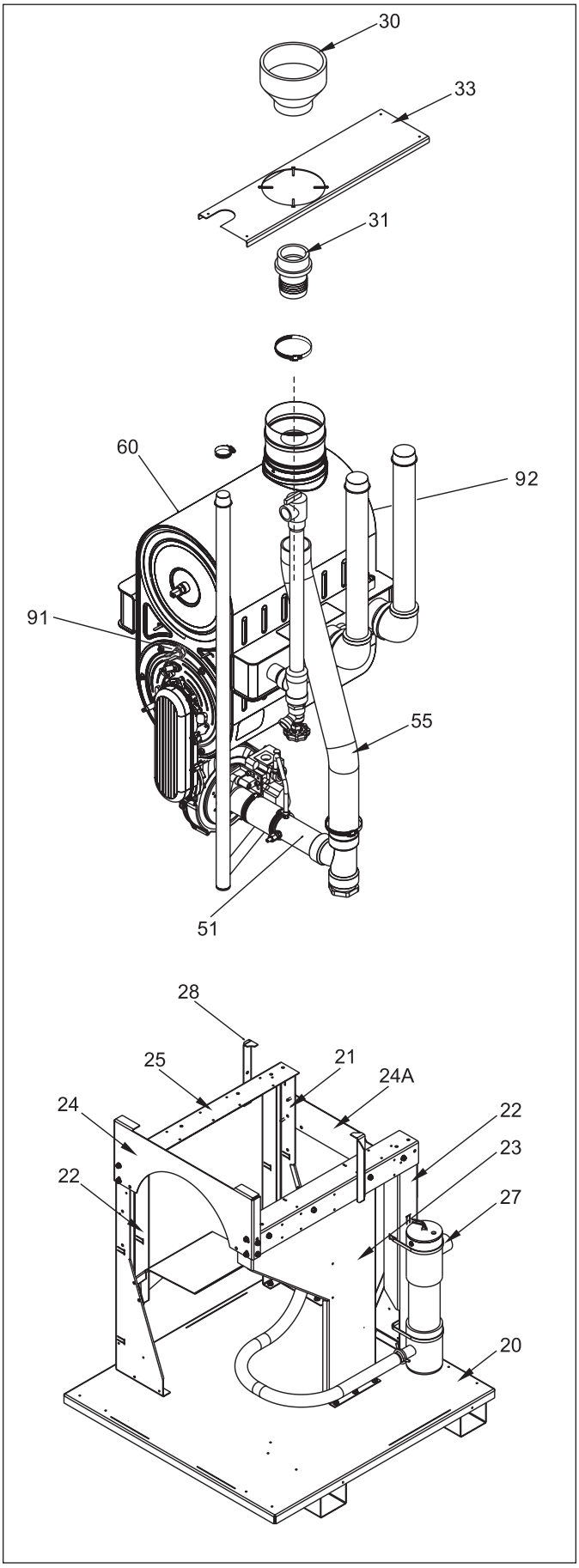

Parts Illustration 3. Internal Components, Sizes 285–600

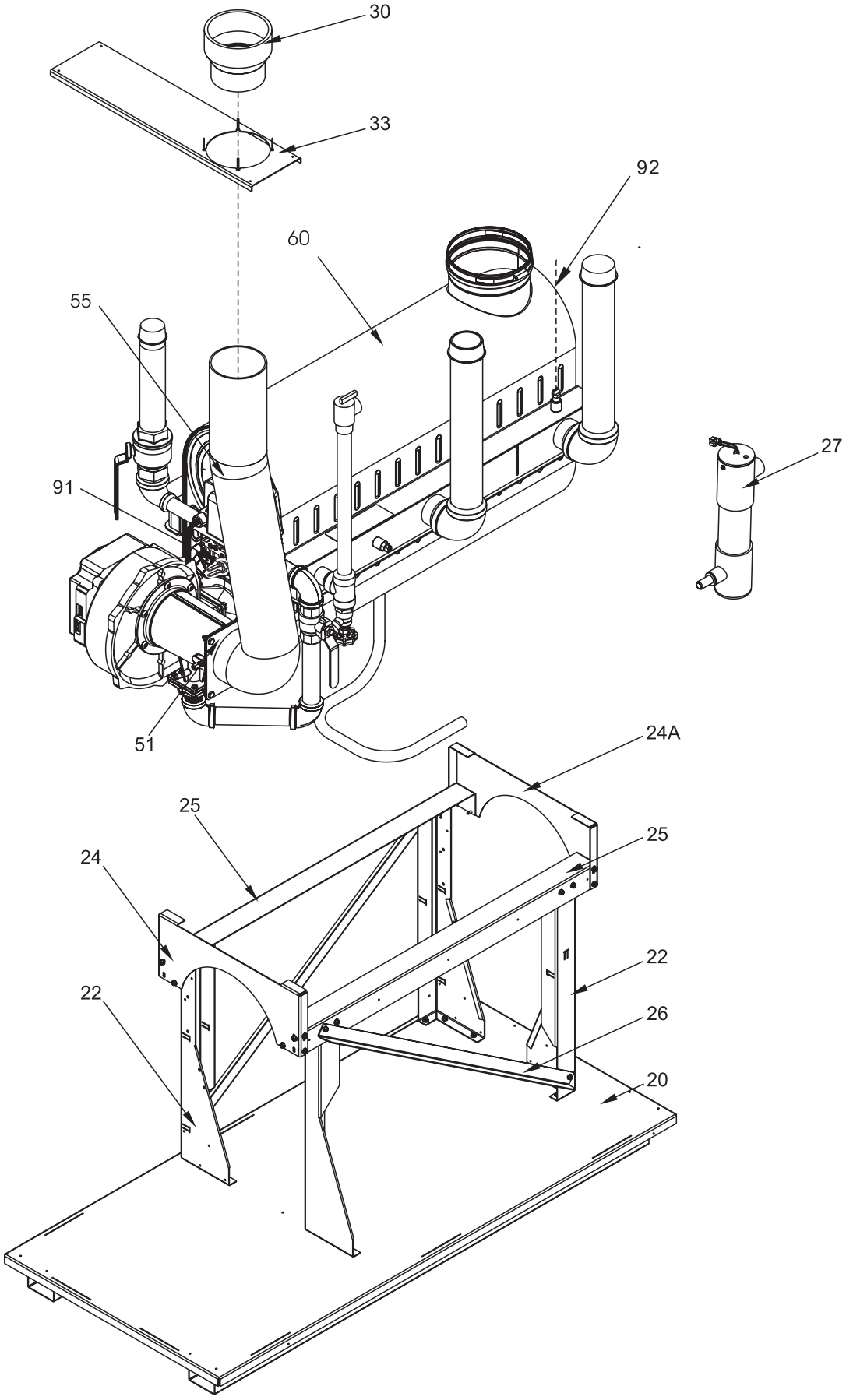

Parts Illustration 4. Internal Components, Sizes 750-850

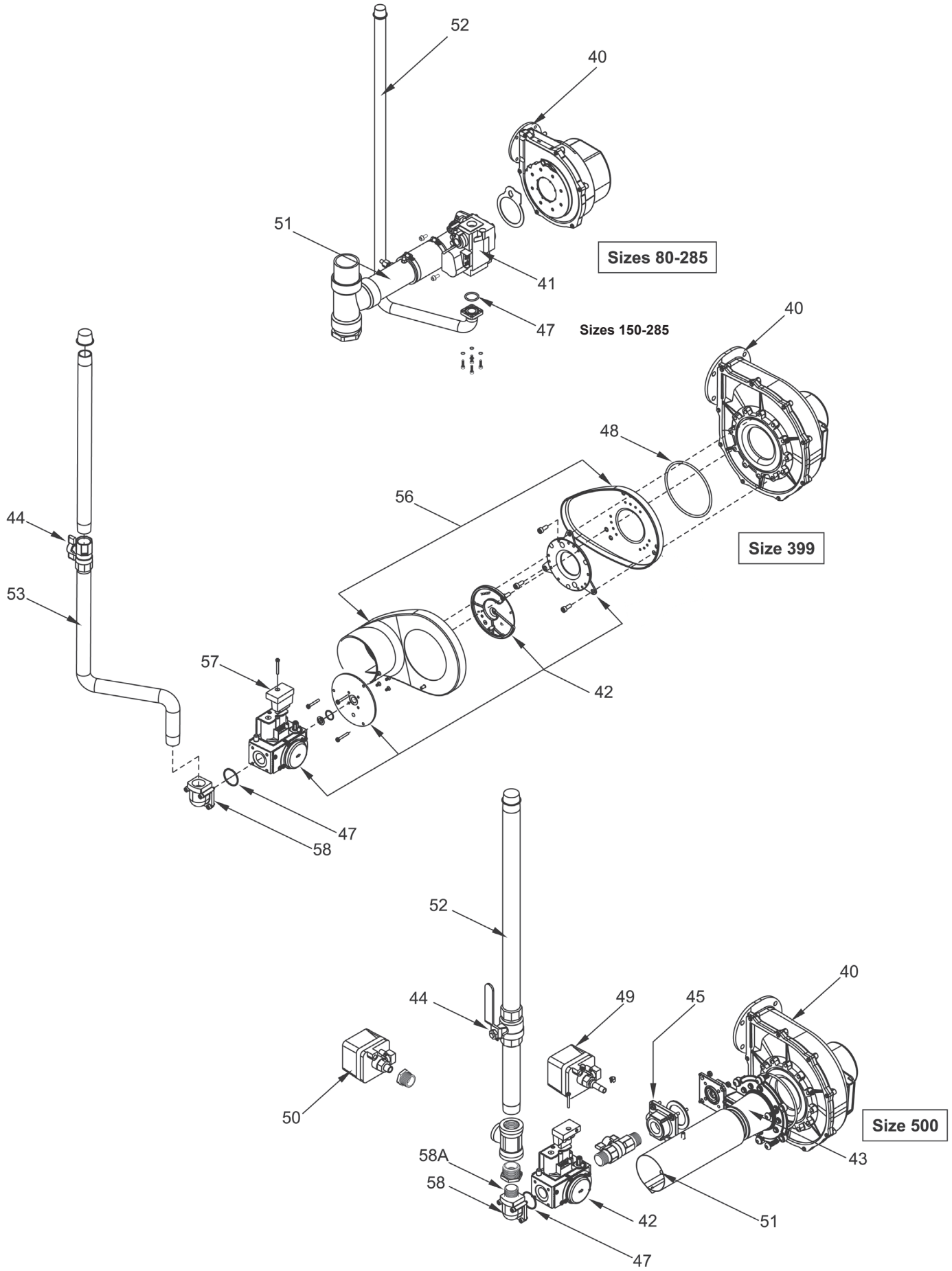

Parts Illustration 5. Gas Train Components, Sizes 150-500

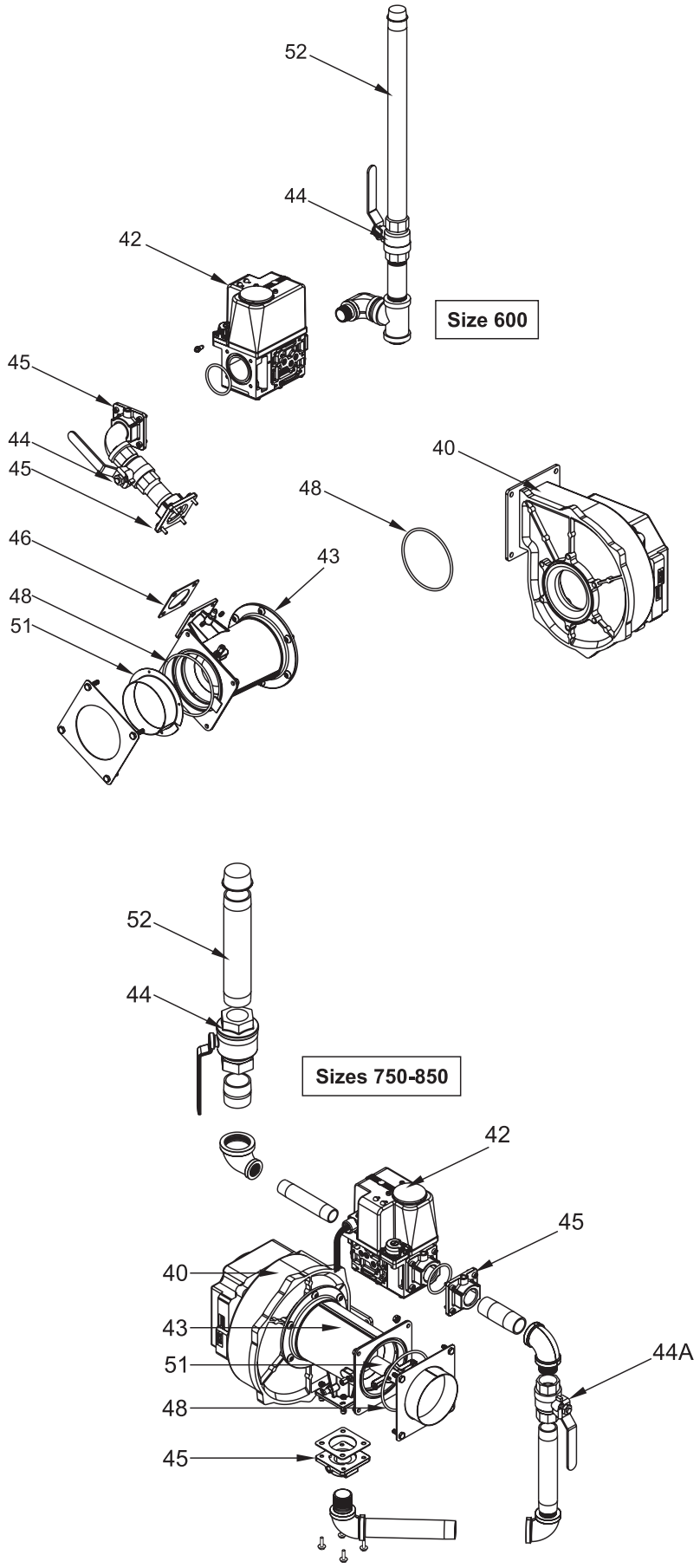

Parts Illustration 6. Gas Train Components, Sizes 600-850

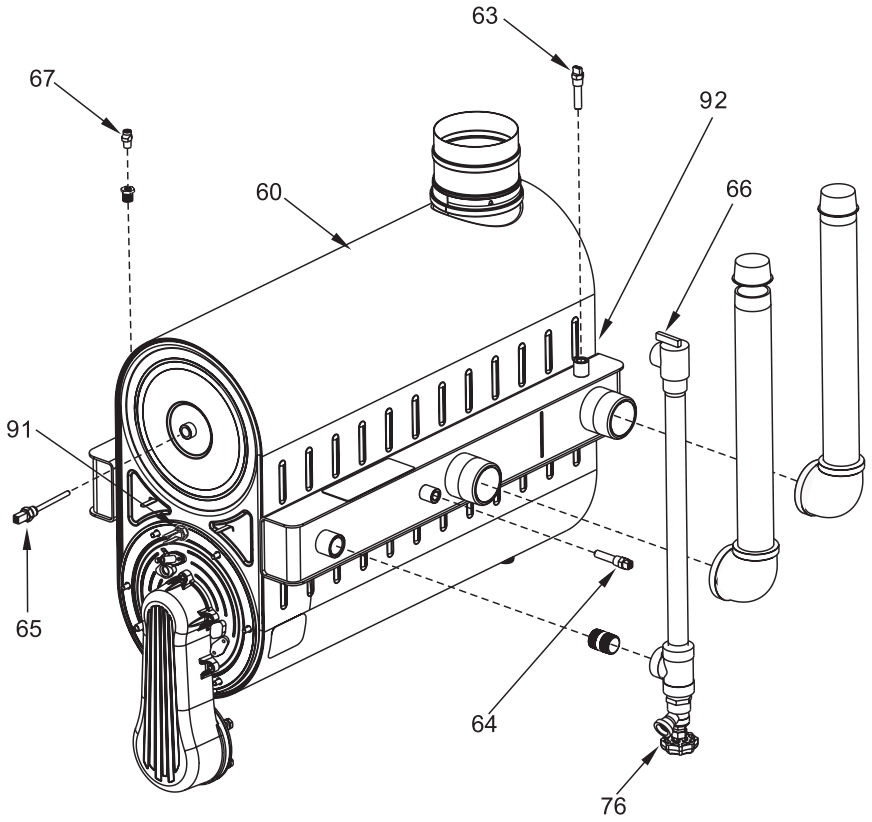

Sizes 285 -

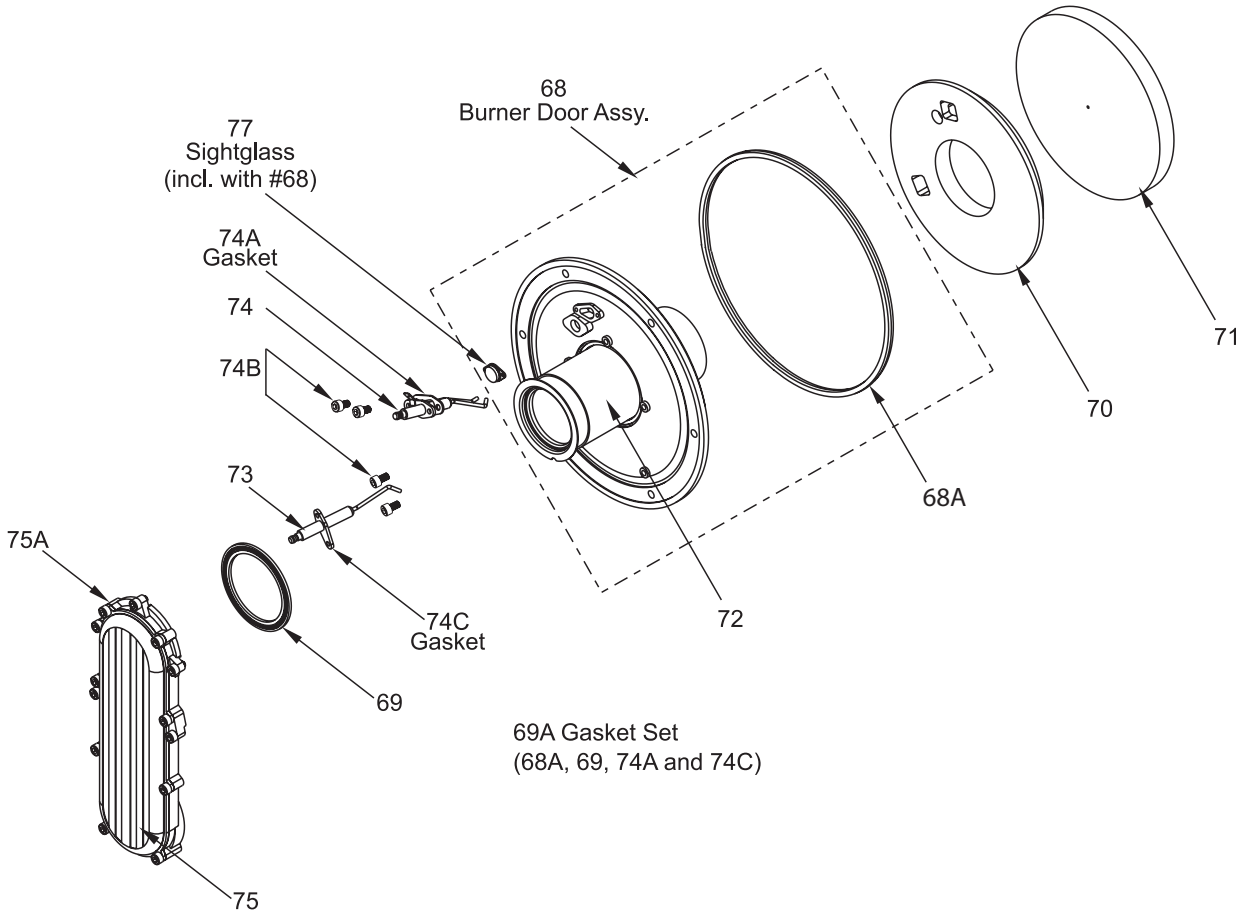

Parts Illustration 7. Heat Exchanger Components

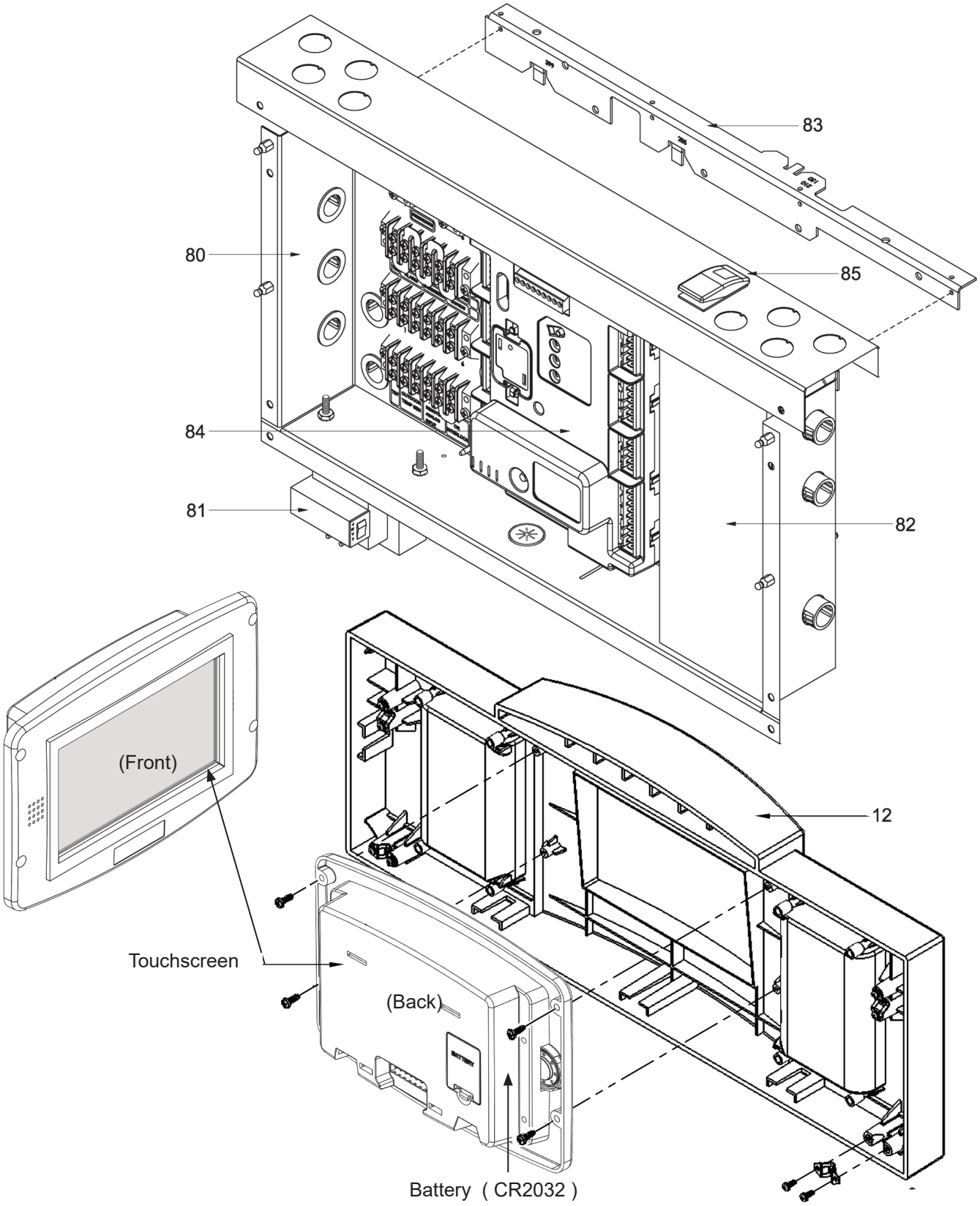

Parts Illustration 8. Electrical Components

Parts Illustration 9. Outdoor Pump

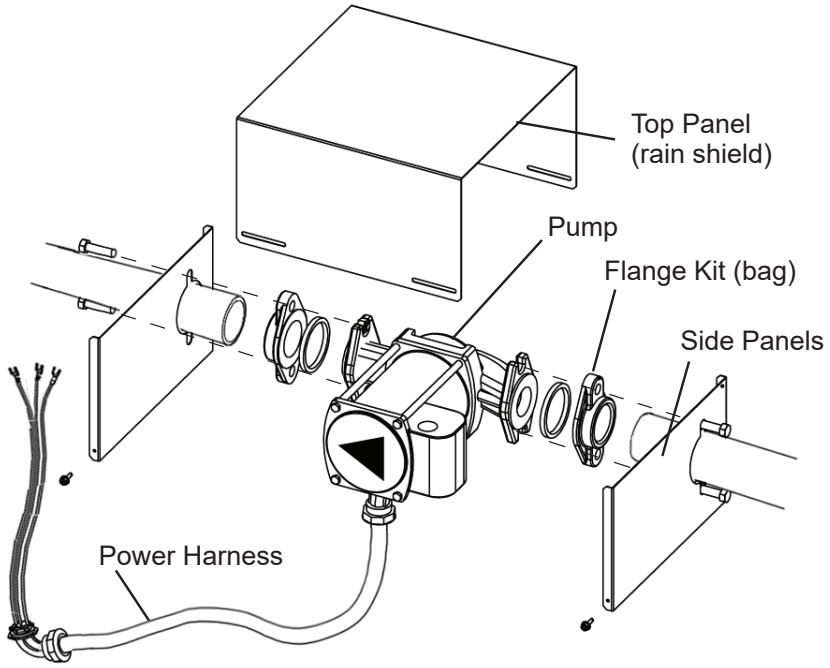

All Manuals (Install & Operate, Start Up, and Service Manuals) can be downloaded at

www.laars.com

For LAARS Product and Service VIDEOS

https://www.youtube.com/user/LaarsHeating

Outdoor Hydronic Boiler Pump Assembly Bill of Materials

Size	Item Number	Part Numbers	Description	Quantity
150	1	A2112227	PUMP ASSEMBLY, TACO 0011, 1" NPT IRON	1
210	1	A2112228	PUMP ASSEMBLY, TACO 0013, 1" NPT, IRON	1
285 &399	1	A2112230	PUMP ASSEMBLY, TACO 0013, 1 1/4" NPT, IRON	1
500	1	A2112229	PUMP ASSEMLBY, TACO 1400-45, 1 1/2" NPT FLANGES	1
All Sizes	2	50D7605	HARNESS, PUMP, NTOD 150-500 (62" LONG)	1
	3	15D3115	TOP PANEL, PUMP COVER, NTOD	1
	4	15D3116	SIDE PANEL, PUMP COVER, NTOD	2
	5	F0024300	SCREW, #10-16 X 5/8", STL, HX WSHR HD, #3 PT	4

Outdoor Volume Water Pump Assembly Bill of Materials

Size	Item Number	Part Numbers	Description	Quantity
150	1	A2115900	FLANGE, PUMP, 1-1/4" NPT, 3 7/16" BOLT PAT, BRASS	2
	2	A2120600	PUMP, CIRCULATOR, ARMSTRONG E11.2LFB	1
199	1	A2116100	FLANGE, PUMP, 1-1/4" NPT, 3 5/32 BOLT PAT, BRASS	2
	2	A2120700	PUMP, CIRCULATOR ARMSTRONG	1
285, 399 & 500	1	A2116000	FLANGE, PUMP, 1-1/2" NPT, BRASS, 3 7/16" BOLT PAT, BRASS	2
	2	A2120800	PUMP, CIRCULATOR, ARMSTRONG E22.2B	1
All Sizes	3	50D7605	HARNESS, PUMP, NTOD 150-500 (62" LONG)	1
	4	15D3115	TOP PANEL, PUMP COVER, NTOD	1
	5	15D3116	SIDE PANEL, PUMP COVER, NTOD	2
	6	F0024300	SCREW, #10-16 X 5/8", STL, HX WSHR HD, #3 PT	4

Dimensions and specifications subject to change without notice in accordance with our policy of continuous product improvement.

H2374100F

Low Lead Content NSF/ANSI 372

H HLW

LAARS Heating Systems Company
A subsidiary of BRADFORD WHITE Corporation

Customer Service and Product Support: 800.900.9276 • Fax 800.559.1583
Headquarters: 20 Industrial Way, Rochester, NH, USA 03867 • 603.335.6300 • Fax 603.335.3355
9 Brigden Gate, Halton Hills, Ontario, Canada L7G 0A3 (905) 203-0600 Fax: (905) 636-0666
www.Laars.com

Printed in U.S.A. © Laars Heating Systems 1812 Document 1330F