SECTION 13 Replacement Parts

Use only genuine Manufacturer replacement parts.

13.A General Information

To order or purchase parts, contact your nearest manufacturers dealer or distributor. (See the back cover of this manual for the manufacturers website).

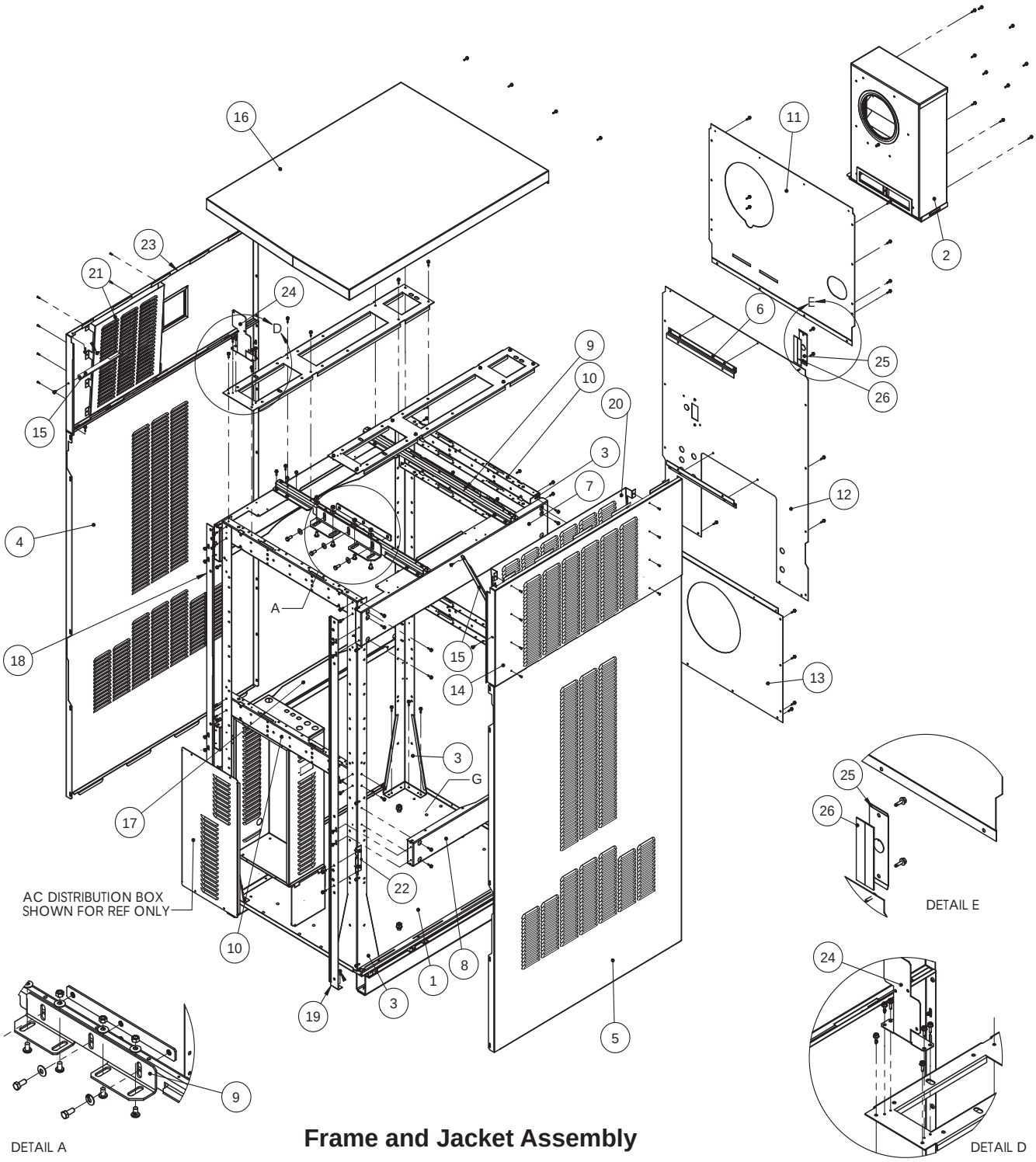

Frame and Jacket Assembly

13.B Component Illustrations, Parts Lists, and Part Numbers

13.B.1 Frame and Jacket Assembly, Part Numbers

		1600	2000	2500	3000	3500	4000
Item #	Description	Part No.	Part No.	Part No.	Part No.	Part No.	Part No.
1	Base assembly	16N1000	20N1000	30N1000	30N1000	40N1000	40N1000
2	Filter	A2121700	A2121700	A2121700	A2121700	A2121700	A2121700
2a	Filter assembly (includes filter)	16N2600	20N2600	25N2600	30N2600	40N2600	40N2600
3	Stanchion	20N3010	20N3010	30N3001	30N3001	40N3001	40N3001
4	Panel, left bottom	20N3002	20N3002	30N3002	30N3002	40N3002	40N3002
5	Panel, right bottom	20N3004	20N3004	30N3004	30N3004	40N3004	40N3004
6	Extension brace, rear	30N3007	30N3007	30N3007	30N3007	30N3007	30N3007
7	Brace, upper side	20N3008	20N3008	30N3008	30N3008	40N3008	40N3008
8	Brace, lower right side	20N3047	20N3047	30N3011	30N3011	40N3047	40N3047
9	Frame mounting bracket	20N3005	20N3005	30N3012	30N3012	40N3005	40N3005
10	Brace	20N3013	20N3013	30N3013	30N3013	40N3013	40N3013
11	Panel, upper rear	16N3019	20N3019	30N3019	30N3019	40N3019	40N3019
12	Panel, center rear	16N3020	20N3020	30N3020	30N3020	40N3020	40N3020
13	Panel, lower rear	16N3021	20N3021	25N3021	30N3021	40N3021	40N3021
14	Panel, right	20N3036	20N3036	30N3036	30N3036	40N3036	40N3036
15	Strut, upper panel support	30N3043	30N3043	30N3043	30N3043	30N3043	30N3043
16	Panel, top	16N3045	20N3045	30N3045	30N3045	40N3045	40N3045
17	Brace, lower left side	20N3047	20N3047	30N3049	30N3049	40N3047	40N3047
18	Hinge mounting bracket, left	20N3163	20N3163	30N3050	30N3050	40N3163	40N3163
19	Hinge mounting bracket, right	20N3164	20N3164	30N3051	30N3051	40N3164	40N3164
20	Panel, right, rain splatter	30N3053	30N3053	30N3053	30N3053	40N3050	40N3050
21	Panel, left, rain splatter	30N3054	30N3054	30N3054	30N3054	40N3050	40N3050
22	Bracket, hinge brace	30N3055	30N3055	30N3055	30N3055	30N3055	30N3055
23	Panel, top left	20N3035	20N3035	30N3057	30N3057	40N3035	40N3035
24	Bracket, pressure switch	20N3053	20N3053	20N3053	20N3053	20N3053	20N3053
25	Cover, field connections	17J3025	17J3025	17J3025	17J3025	17J3025	17J3025
26	Gasket, .75" x .06" x 2 feet	R2074402	R2074402	R2074402	R2074402	R2074402	R2074402

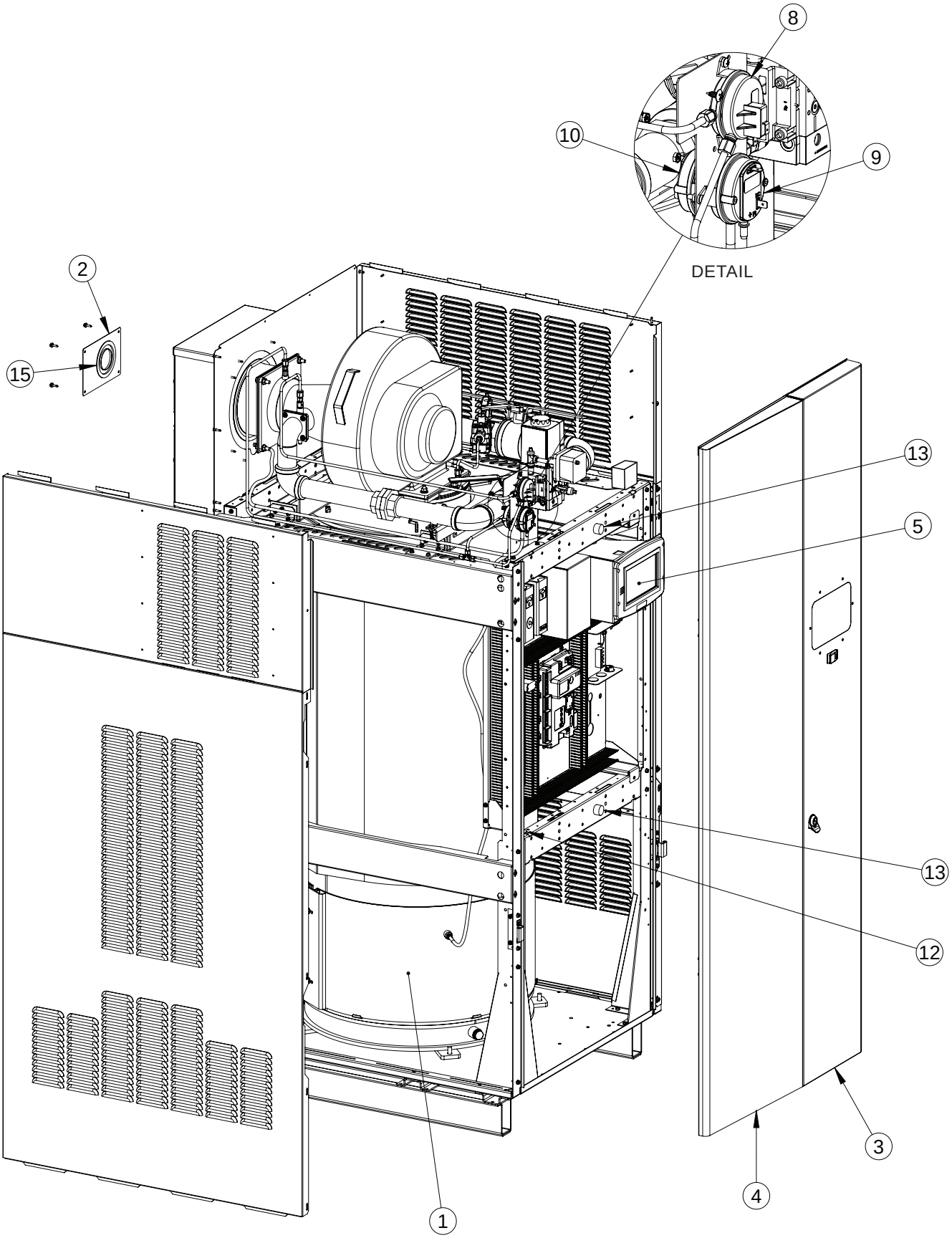

Final Assembly

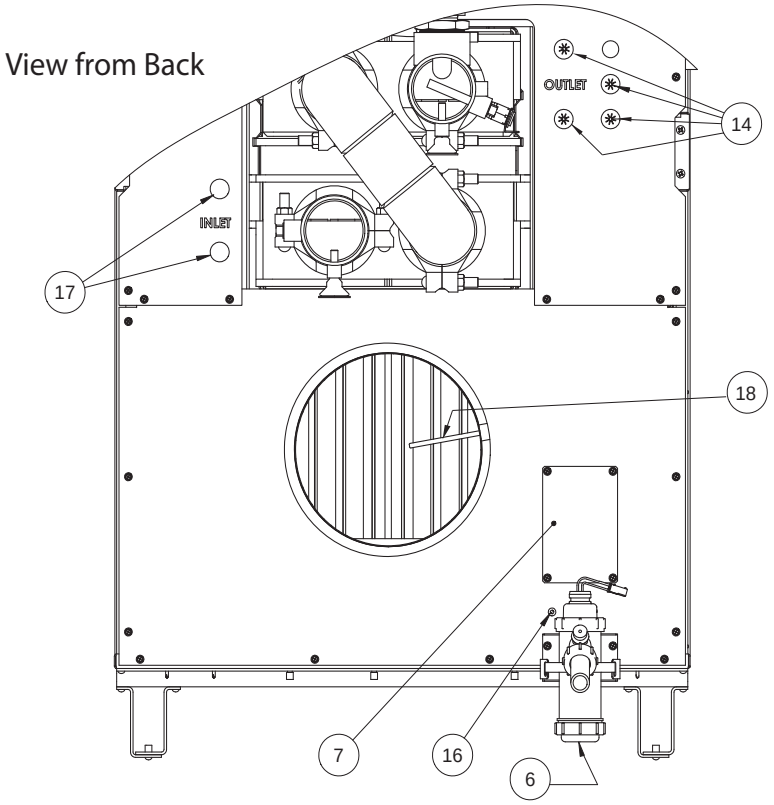

13.B.2 Final Assembly, Part Numbers

		1600	2000	2500	3000	3500	4000
Item #	Description	Part No.	Part No.	Part No.	Part No.	Part No.	Part No.
1	Heat Exchanger Assembly	R16N2070	R20N2070	R30N2070	R30N2070	R40N2070	R40N2070
2	Plate, rear panel, gas pipe	20N3034	30N3034	30N3034	30N3034	30N3034	30N3034
3	Door, right	20N3100	20N3100	30N3100	30N3100	40N3100	40N3100
4	Door, left	20N3150	20N3150	30N3150	30N3150	40N3150	40N3150
5	Control panel assemblies:						
	MGH	20N7080	20N7080	30N7080	30N7080	40N7080	40N7080
	MGH with CSD-1	20N7081	20N7081	30N7081	30N7081	40N7081	40N7081
	MGV	20N7082	20N7082	30N7082	30N7082	40N7082	40N7082
	MGV with CSD-1	20N7083	20N7083	30N7083	30N7083	40N7083	40N7083
6	Condensate trap assembly	20N2010	20N2010	30N2010	30N2010	40N2010	40N2010
7	Panel, drain access	40N3048	40N3048	40N3048	40N3048	40N3048	40N3048
8	Pressure switch	E2363100	E2362200	E2362201	E2361900	E2361900	E2361900
9	Pressure switch	E2344901	E2362000	E2363400	E2362301	E2362300	E2362300
10	Pressure switch	E2362200	N/A	N/A	N/A	E2362302	E2362302
11	Outlet box (not shown)	E2350900	E2350900	E2350900	E2350900	E2350900	E2350900
12	Spacer	F2035400	F2035400	F2035400	F2035400	F2035400	F2035400
13	Silicone rubber bumper	F2039700	F2039700	F2037900	F2037900	F2037900	F2037900
14	Bushing, nylon	S0064900	S0064900	S0064900	S0064900	S0064900	S0064900
15	Grommet, 2" pipe	S2116500	S2116500	S2116500	S2116500	S2116500	S2116500
16	Grommet, push-in	S2123600	S2123600	S2123600	S2123600	S2123600	S2123600
17	Plug, button, 7/8"	F0032300	F0032300	F0032300	F0032300	F0032300	F0032300
18	Flue Gas Sensor	E2340000	E2340000	E2340000	E2340000	E2340000	E2340000

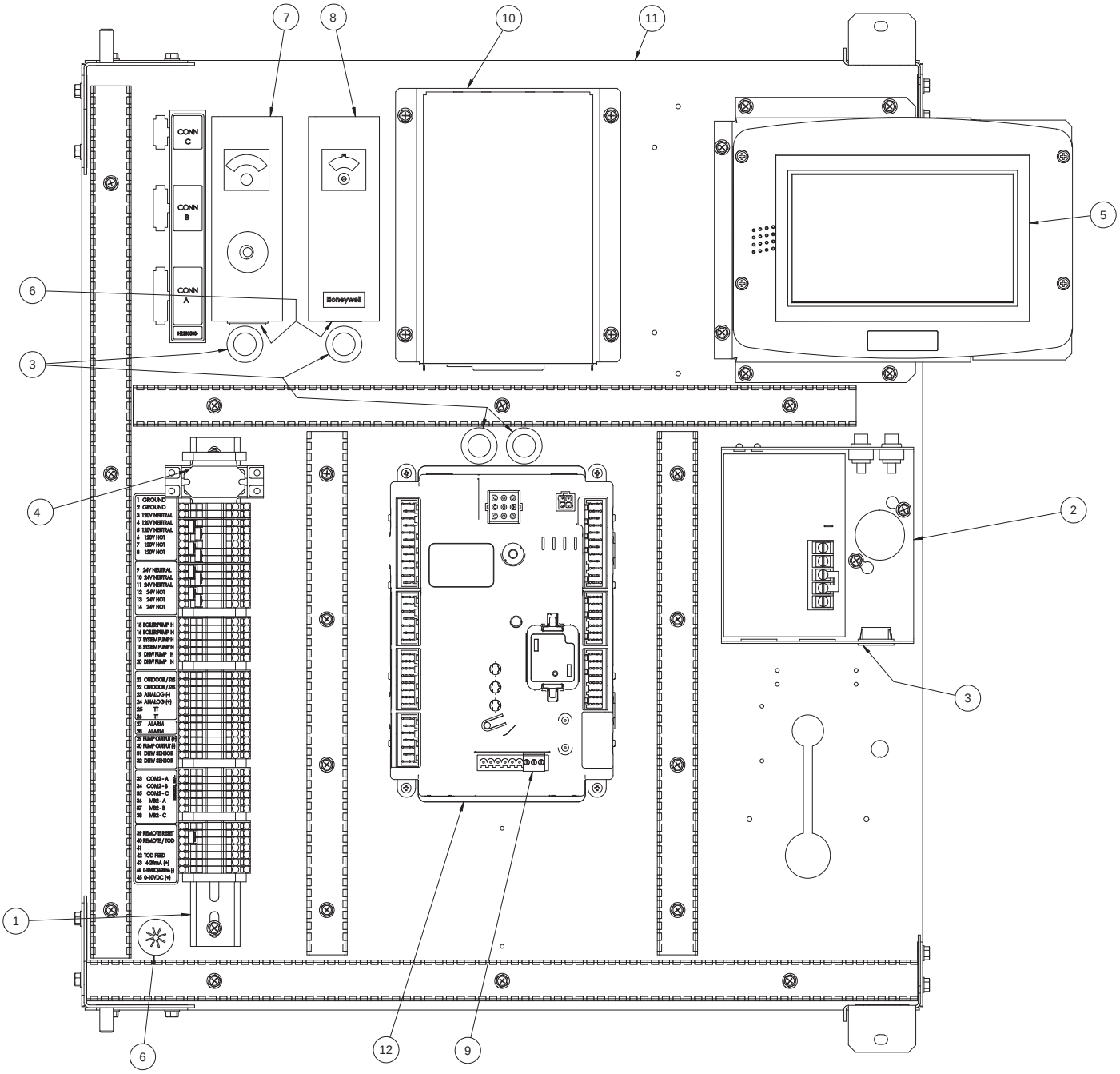

13.B.3 Control Panel Assembly, Part Numbers

		1600	2000	2500	3000	3500	4000
Item #	Description	Part No.	Part No.	Part No.	Part No.	Part No.	Part No.
1	DIN rail assembly	30N7040	30N7040	30N7040	30N7040	30N7040	30N7040
2	Low water cutoff	RE2075100	RE2075100	RE2075100	RE2075100	RE2075100	RE2075100
3	Bushing, 7/8 nylon, open	E2074300	E2074300	E2074300	E2074300	E2074300	E2074300
4	Relay, 24VAC, DPDT	E2327800	E2327800	E2327800	E2327800	E2327800	E2327800
5	Display, touch control	E2339800	E2339800	E2339800	E2339800	E2339800	E2339800
6	Bushing, 7/8 nylon, split	S0064900	S0064900	S0064900	S0064900	S0064900	S0064900
7	High limit, manual reset	E2217800	E2217800	E2217800	E2217800	E2217800	E2217800
8	High limit, auto reset	E2217700	E2217700	E2217700	E2217700	E2217700	E2217700
9	Plug, terminal block	E2346300	E2346300	E2346300	E2346300	E2346300	E2346300
10	Vari-Prime control (MGH)	30N7067	30N7067	30N7067	30N7067	30N7067	30N7067
11	Control panel sheet metal assembly	30N7050	30N7050	30N7050	30N7050	40N7050	40N7050
12	Control module, programmed						
	Standard	RXN7051	RXN7051	RXN7055	RXN7051	RXN7055	RXN7051
	CSD-1	RXN7052	RXN7052	RXN7056	RXN7052	RXN7056	RXN7052

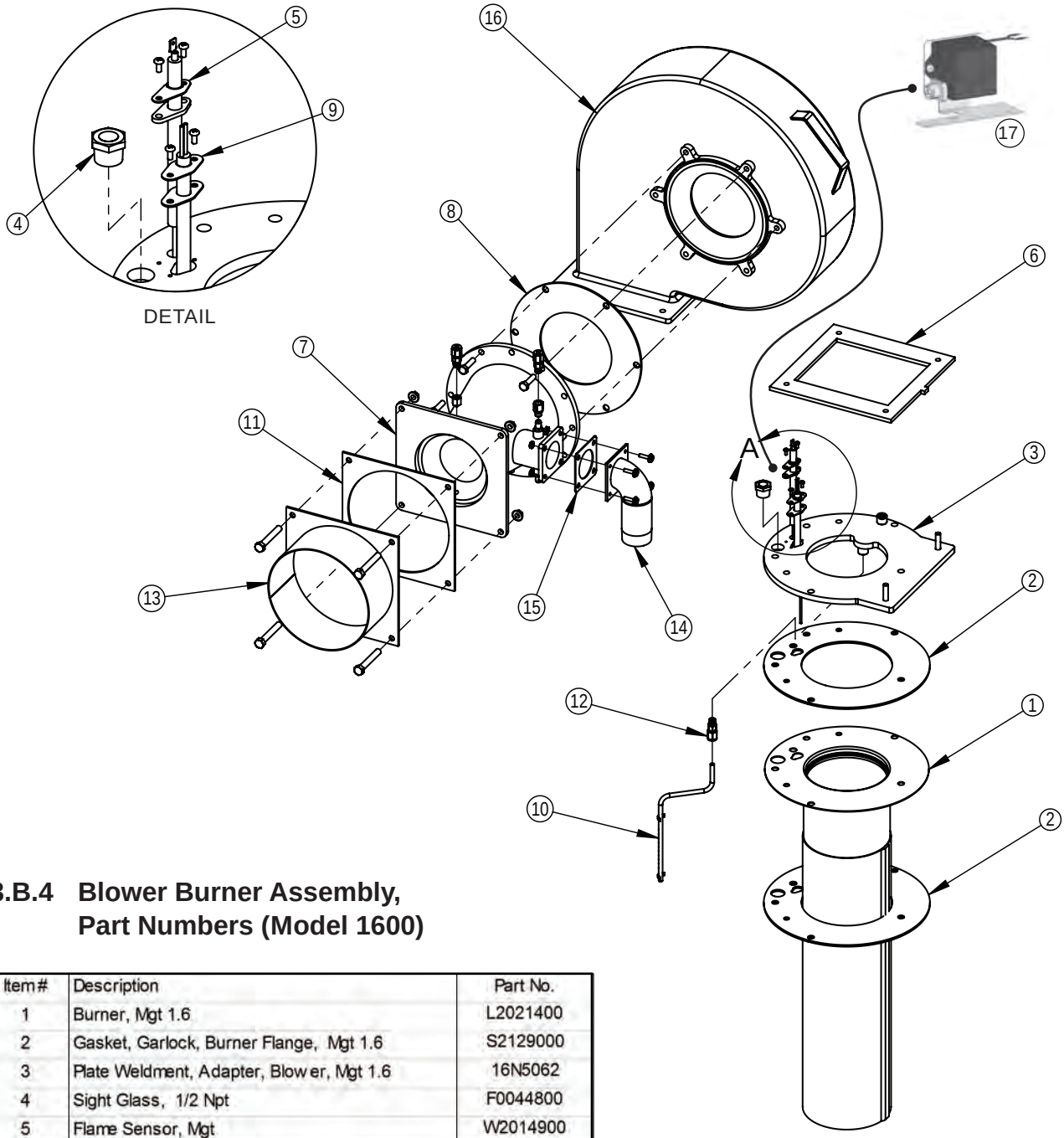

13.B.4 Blower Burner Assembly, Part Numbers (Model 1600)

Item #	Description	Part No.
1	Burner, Mgt 1.6	L2021400
2	Gasket, Garlock, Burner Flange, Mgt 1.6	S2129000
3	Plate Weldment, Adapter, Blower, Mgt 1.6	16N5062
4	Sight Glass, 1/2 Npt	F0044800
5	Flame Sensor, Mgt	W2014900
6	Gasket, Fan Outlet	S2011100
7	Venturi, Honeywell Vmu500A	A2123300
8	Gasket, Af-10 Blower Intake,	20N5095
9	Igniter,	W2014100
10	Weldment, Pilot Tube,	20N5088
11	Gasket, Filter Box Flange,	20N5094
12	Adapter, 1/8" Npt M X 1/4" Tube, Ss	P2097800
13	Pipe & Flange Weldment, Blower, Mgt 1.6	16N5092
14	Pipe & Flange Weldment, Gas Intake, 1.6 Mgt.	16N5074
15	Gasket, Venturi/Gas Valve, Cork	S2104900
16	Blower, Gas, Fan/Motor	A2132700
17	Spark Generator	20N3060

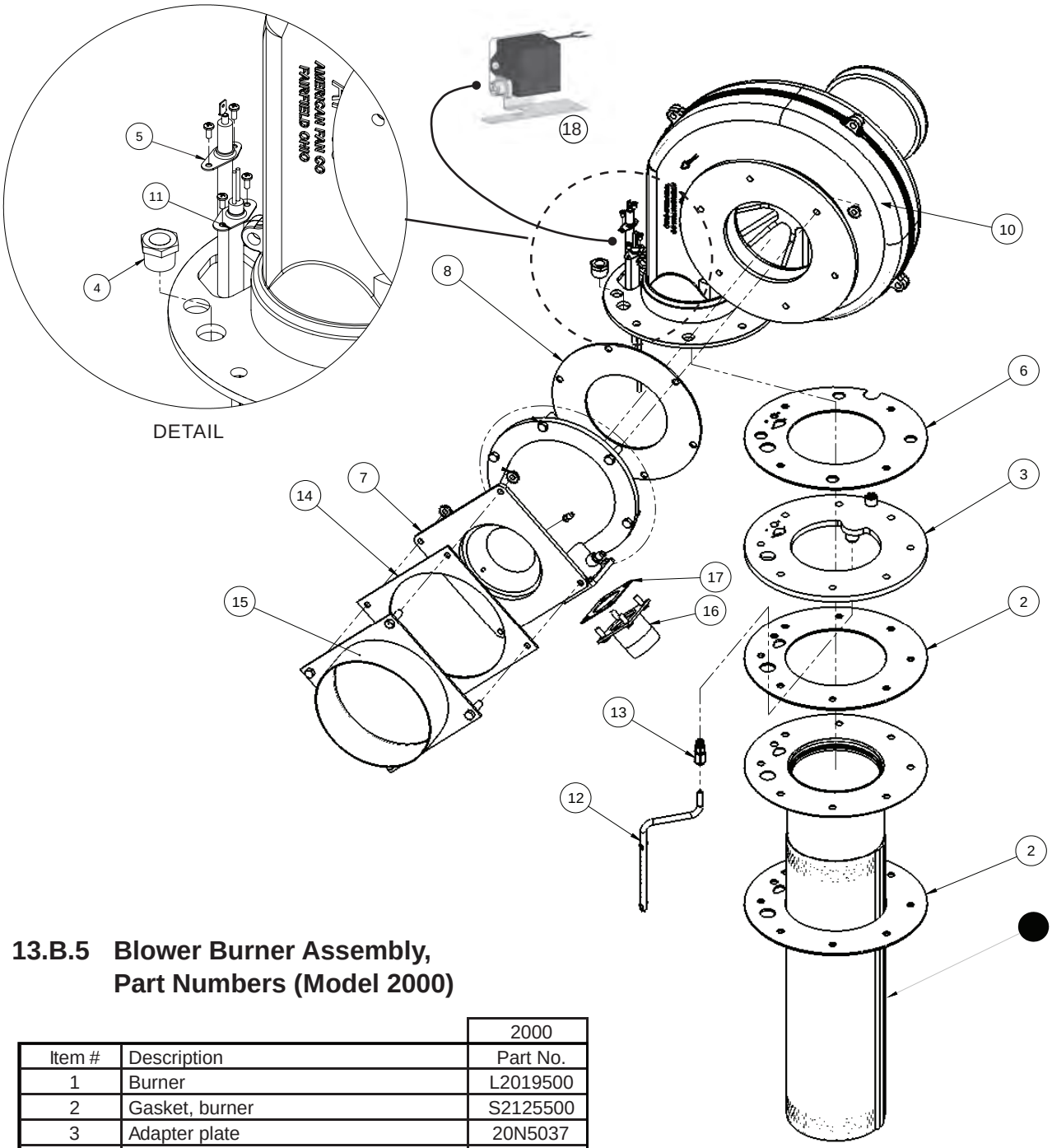

13.B.5 Blower Burner Assembly, Part Numbers (Model 2000)

Item #	Description	2000 Part No.
1	Burner	L2019500
2	Gasket, burner	S2125500
3	Adapter plate	20N5037
4	Sight glass	RF0044800
5	Flame sensor	W2014900
6	Gasket, blower outlet flange	S2125600
7	Venturi / Air intake assembly	A2123300
8	Gasket, blower intake	20N5095
9	Flow sensor, diff pressure	N/A
10	Blower	See Section 13.B.9
11	Ignitor	W2014100
12	Pilot tube	20N5088
13	Compression fitting	P2085000
14	Gasket, filter box flange	20N5094
15	Pipe & flange weldment	20N5092
16	Pipe & flange weldment	20N5090
17	Gasket, venturi / gas valve	S2104900
18	Spark Generator	20N3060

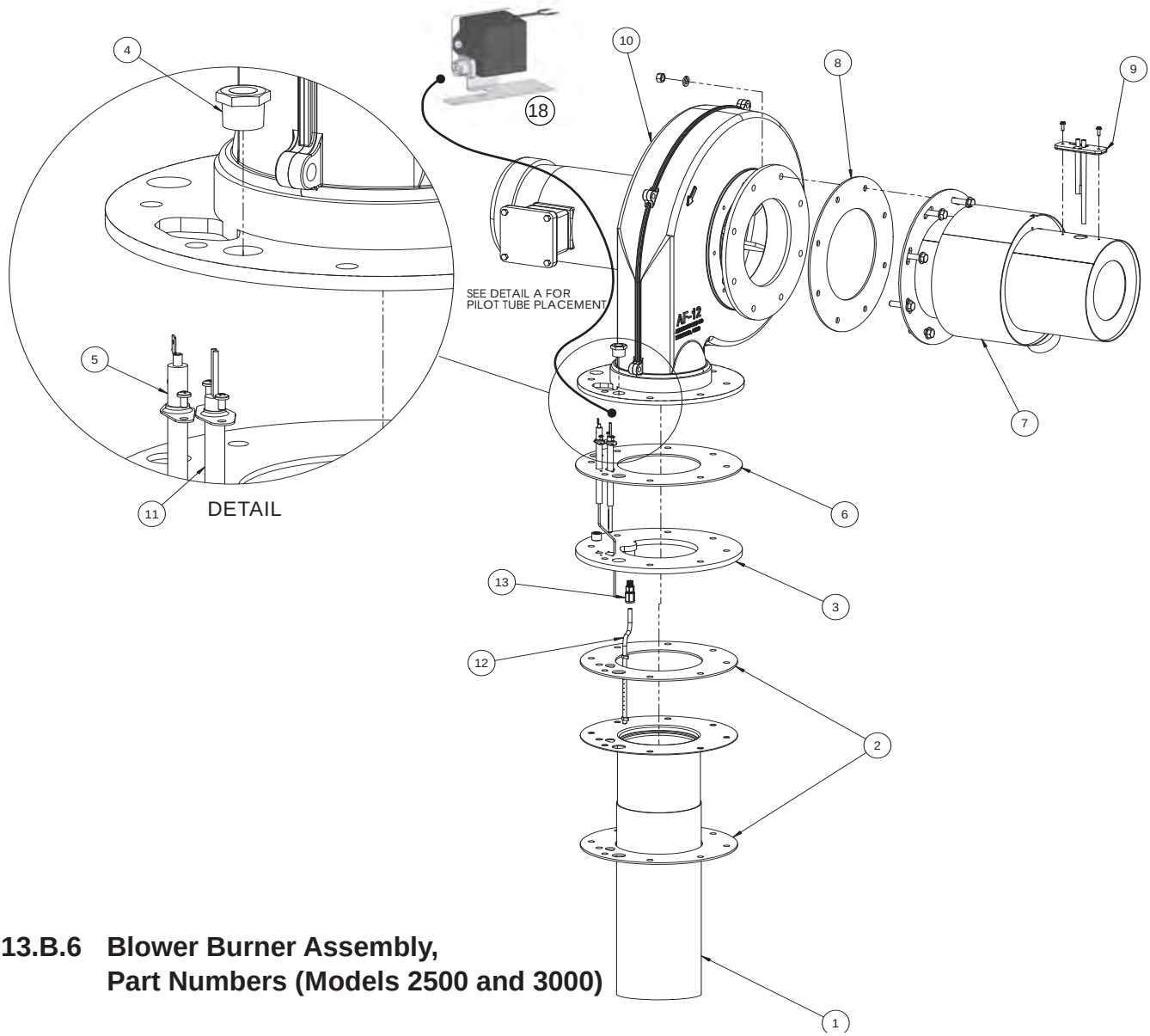

13.B.6 Blower Burner Assembly, Part Numbers (Models 2500 and 3000)

		2500	3000
Item #	Description	Part No.	Part No.
1	Burner	L2020600	L2020600
2	Gasket, burner	S2125100	S2125100
3	Adapter plate	30N5037	30N5037
4	Sight glass	RF0044800	RF0044800
5	Flame sensor	W2014900	W2014900
6	Gasket, blower outlet flange	S2125200	S2125200
7	Venturi / Air intake assembly	30N5092	30N5092
8	Gasket, blower intake	S2125300	S2125300
9	Flow sensor, diff pressure	A2121601	A2121601
10	Blower	See Section 13.B.10	
11	Ignitor	W2014100	W2014100
12	Pilot tube	30N5093	30N5093
13	Compression fitting	P2085000	P2085000
14	Gasket, filter box flange	N/A	N/A
15	Pipe & flange weldment	N/A	N/A
16	Pipe & flange weldment	N/A	N/A
17	Gasket, venturi / gas valve	N/A	N/A
18	Spark Generator	20N3060	30N3060

13.B.7 Blower Burner Assembly, Part Numbers (Models 3500 and 4000)

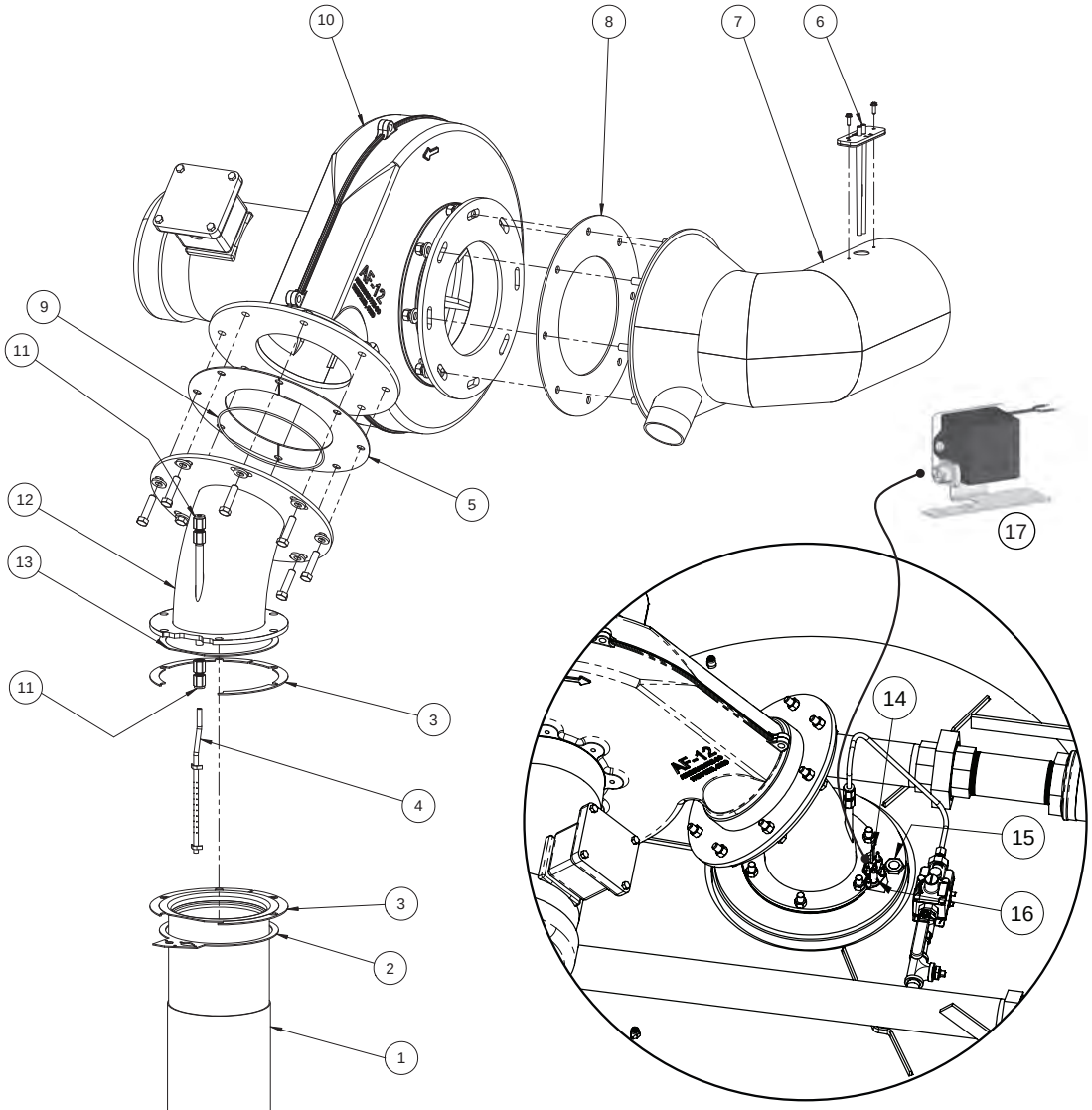

		3500	4000
Item #	Description	Part No.	Part No.
1	Burner	L2019900	L2019900
2	Gasket, burner	S2124100	S2124100
3	Gasket, spacer	40N5092	40N5092
4	Pilot tube	40N5090	40N5090
5	Gasket, blower outlet flange	40N5093	40N5093
6	Flow sensor, diff pressure	A2121600	A2121600
7	Gas/air intake assembly	40N5069	40N5069
8	Gasket, blower intake	S2125300	S2125300
9	O-Ring	S2124800	S2124800
10	Blower	See Section 13.B.10	
11	Adapter 1/4" tube x 1/8" female	P2090200	P2090200
12	Blower tube	40N5077	40N5077
13	Gasket, burner	S2124600	S2124600
14	Ignitor	W2014100	W2014100
15	Sight glass	RF0044800	RF0044800
16	Flame sensor	W2014900	W2014900
17	Spark Generator	40N3060	40N3060

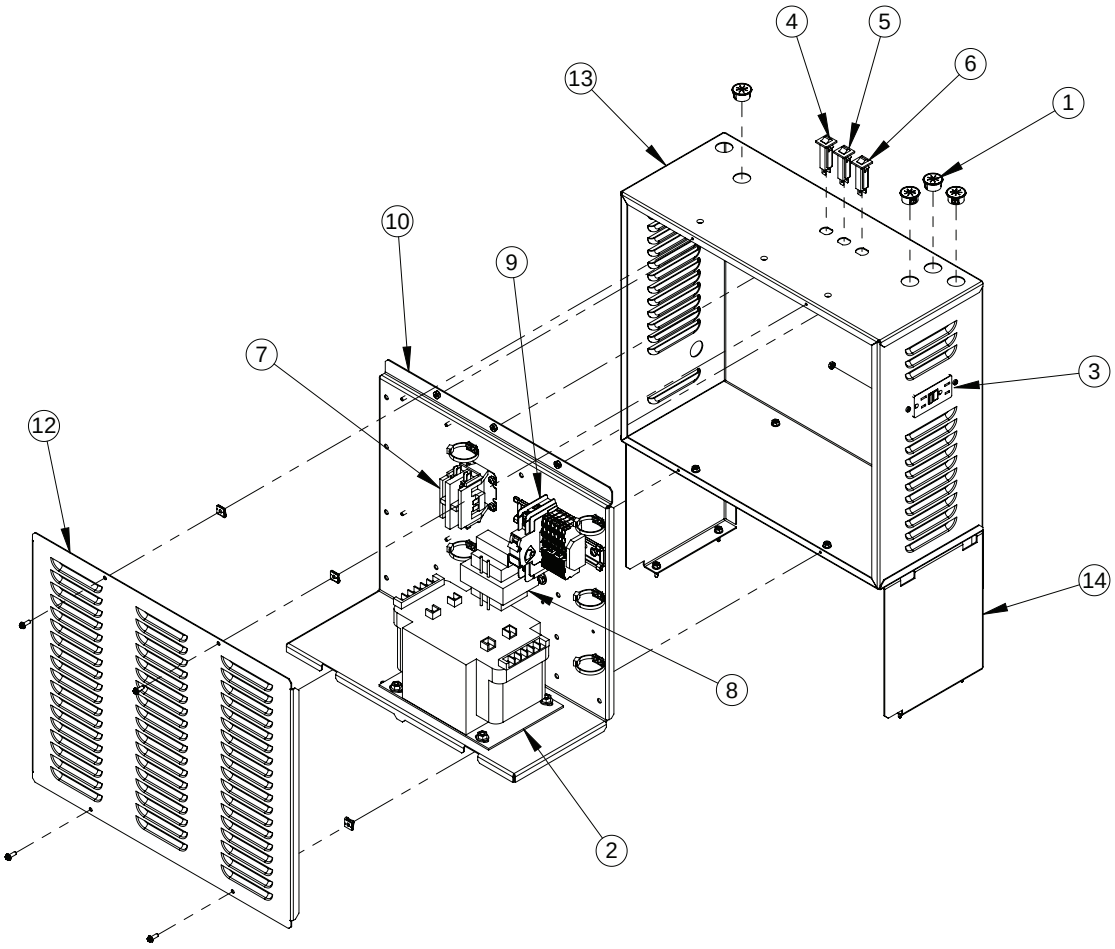

13.B.8 AC Distribution Box Assemblies and Part Numbers (Model 1600)

		1600	
		120V	220V
Item #	Description		
1	Bushing, Nylon, 7/8, Slit	S0064900	S0064900
2	Transformer	E2359300	E2355900
3	GFCI Receptacle, Nema 5-15, Ivory, Box Mount	E2355400	E2355400
4	Circuit Breaker, 2A	E2335100	E2335100
5	Circuit Breaker, 10 Amp	E2318900	E2318900
6	Circuit Breaker, 3A	E2311800	E2311800
7	Relay, 115 VAC, DPST	E2311100	E2311100
8	Transformer, 120/24, 75VA	E2108700	E2108700
9	Din Rail Assembly, AC Distribution Box,	40N7064	40N7065
10	Panel, AC Distribution Box	20N7316	20N7317
11	Wire Harness Assy, Hi Volt Circuit Brkrs To Xfrmr/Cont/Cntrl	16N7401	16N7402
12	Cover, Box, Input Power, MGT	20N7313	20N7313
13	Box, Power Input	20N7312	20N7312
14	Box, Support, Input Power	20N7311	20N7311

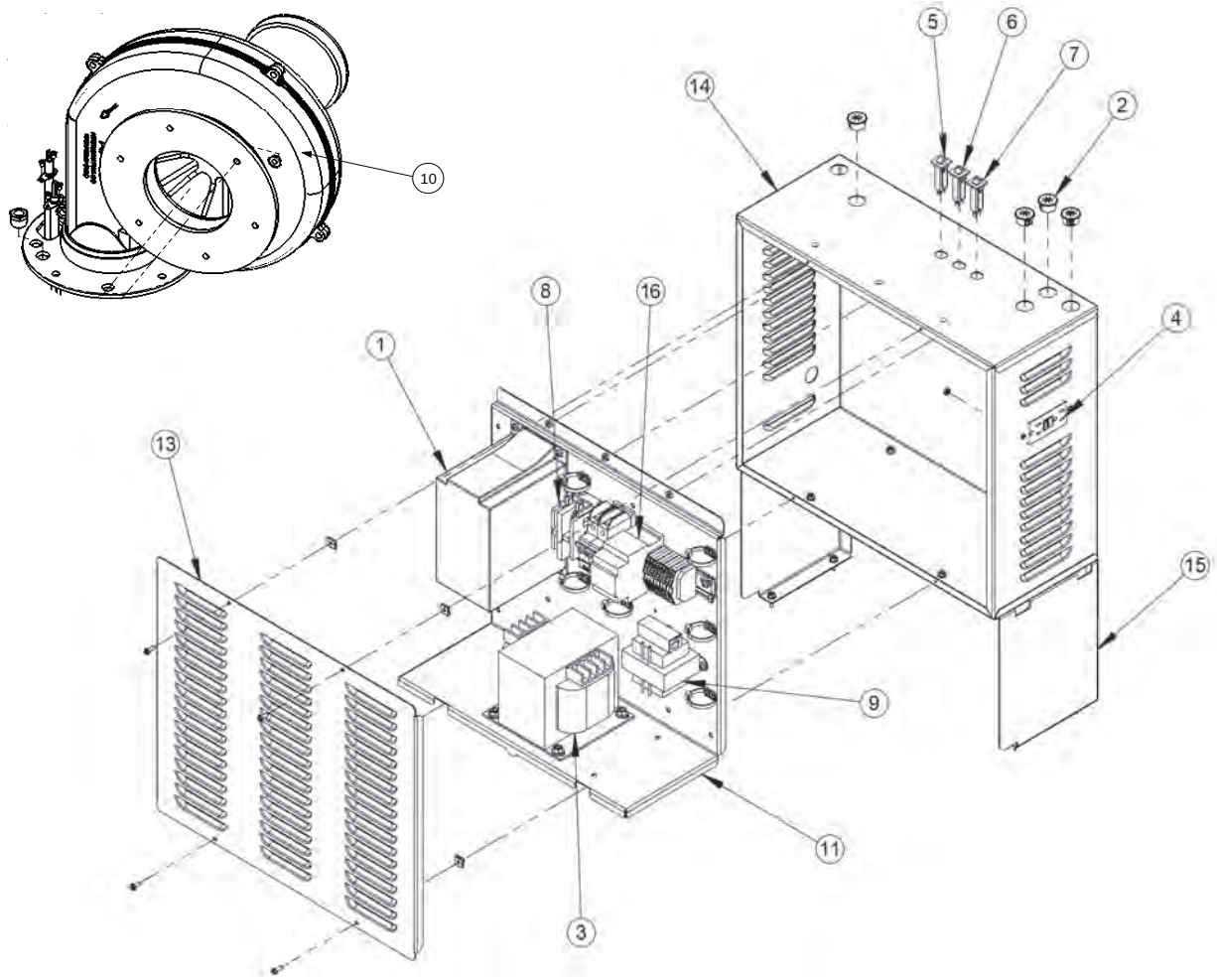

13.B.9 AC Distribution Box Assembly and Blower Part Numbers (Model 2000)

		2000				
		120V	220V	208V	480V	600V
Item#	Description					
1	VFD With Program, MGT 2.0	XN715001	XN715001	XN715002	XN715003	XN715003
2	Bushing, Nylon, 7/8, Slit	S0064900	S0064900	S0064900	S0064900	S0064900
3	Transformer	E2359300	E2355900	E2355500	E2352600	E2352600
4	GFCI Receptacle, Nema 5-15, Ivory, Box Mount	E2355400	E2355400	E2355400	E2355400	E2355400
5	Circuit Breaker, 2A	E2335100	E2335100	E2335100	E2335100	E2335100
6	Circuit Breaker, 10 Amp	E2318900	E2318900	E2318900	E2318900	E2318900
7	Circuit Breaker, 3A	E2311800	E2311800	E2311800	E2311800	E2311800
8	Relay, 115 VAC, DPST	E2311100	E2311100	-	-	-
9	Transformer, 120/24, 75VA	E2108700	E2108700	E2108700	E2108700	E2108700
10	Blower, Combustion Air	A2123800	A2123800	A2123800	A2123800	A2124200
11	Panel, AC Distribution Box	20N7316	20N7317	20N7318	20N7318	20N7318
12	Wire Harness Assy, Hi Volt Circuit Brkrs To Xfrmr/Cont/Cntrl	20N740001	20N740002	20N740003	20N740004	20N740005
13	Cover, Box, Input Power, MGT	20N7313	20N7313	20N7313	20N7313	20N7313
14	Box, Power Input	20N7312	20N7312	20N7312	20N7312	20N7312
15	Box, Support, Input Power	20N7311	20N7311	20N7311	20N7311	20N7311
16	Din Rail Assembly, AC Distribution Box, MGT 220V	40N7064	40N7065	40N7063	40N7062	40N7066

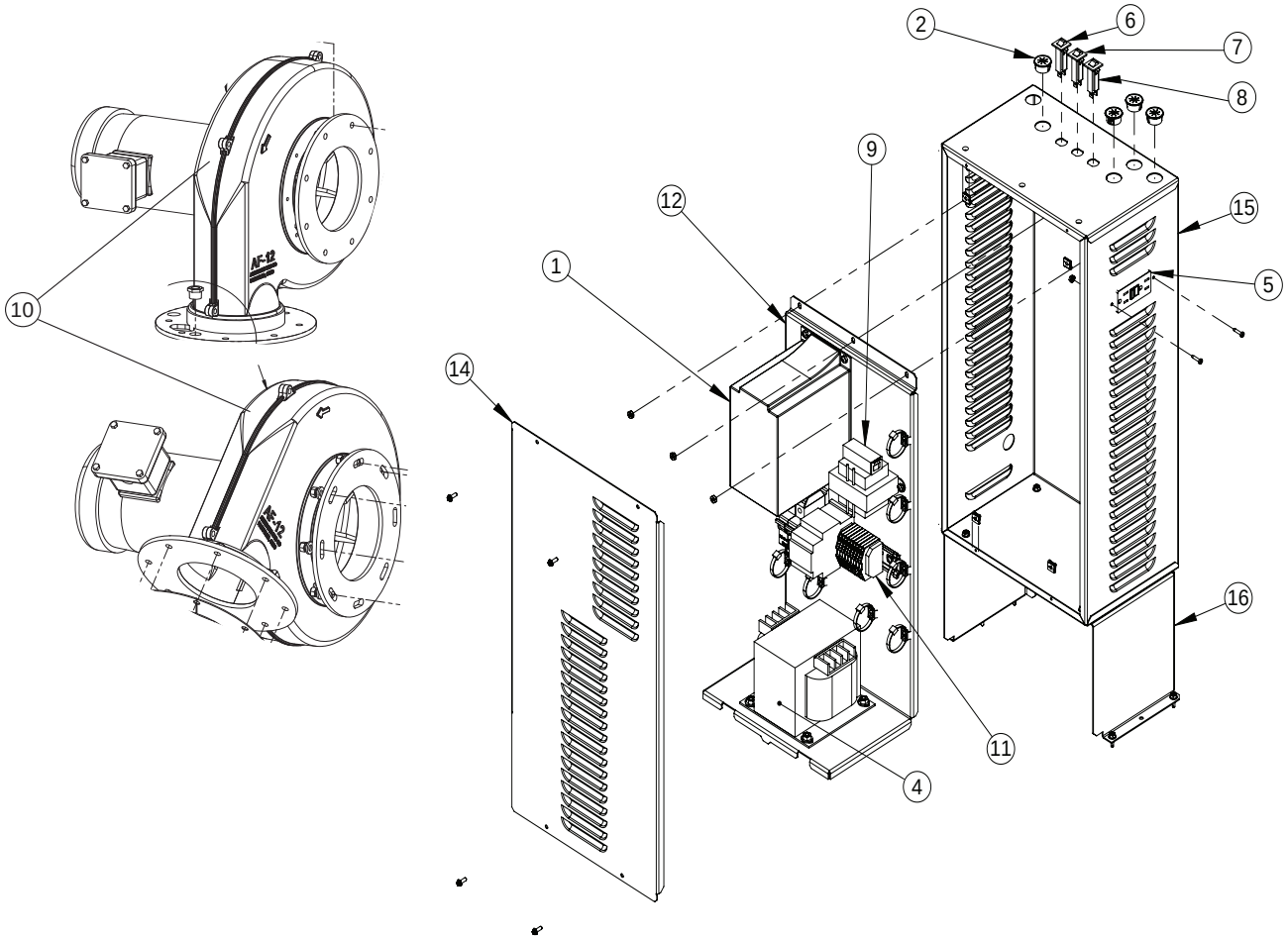

13.B.10 AC Dist Box Assy and Blower Part Numbers (Models 2500 to 4000)

		2500			3000			3500			4000		
		208V	480V	600V	208V	480V	600V	208V	480V	600V	208V	480V	600V
1	VFD With Program	XN715008	XN715009	XN715010	XN715005	XN715006	XN715007	XN715011	XN715012	XN715013	XN715005	XN715006	XN715007

		2500 & 3000			3500 & 4000		
		208V	480V	600V	208V	480V	600V
3	Bushing, Reducing, 1 Inch Conduit	E2357600	E2357600	E2357600	E2357600	E2357600	E2357600
4	Transformer	E2355500	E2352600	E2352600	E2355500	E2352600	E2352600
5	GFCI Receptacle, Nema 5-15, Ivory, Box Mount	E2355400	E2355400	E2355400	E2355400	E2355400	E2355400
6	Circuit Breaker, 2A	E2335100	E2335100	E2335100	E2335100	E2335100	E2335100
7	Circuit Breaker, 10 Amp	E2318900	E2318900	E2318900	E2318900	E2318900	E2318900
8	Circuit Breaker, 3A	E2311800	E2311800	E2311800	E2311800	E2311800	E2311800
9	Transformer, 120/24, 75VA	E2108700	E2108700	E2108700	E2108700	E2108700	E2108700
10	Blower, Combustion Air	A2123700	A2123700	A2124100	A2123900	A2123900	A2124300
11	Din Rail Assembly, AC Distribution Box, MGT	40N7063	40N7062	40N7066	40N7063	40N7062	40N7066
12	Panel, AC Distribution Box	40N7061	40N7061	40N7061	40N7061	40N7061	40N7061
13	Wire Harness Assy, Hi Volt Circuit Brkrs To Xfrmr/Cont/Cntrl	30N745001	30N745002	30N745003	40N745001	40N745002	40N745003
14	Cover, Box, Input Power, MGT	30N3028	30N3028	30N3028	30N3028	30N3028	30N3028
15	Box, Power Input	30N3024	30N3024	30N3024	30N3024	30N3024	30N3024
16	Box, Support, Input Power	30N3023	30N3023	30N3023	30N3023	30N3023	30N3023

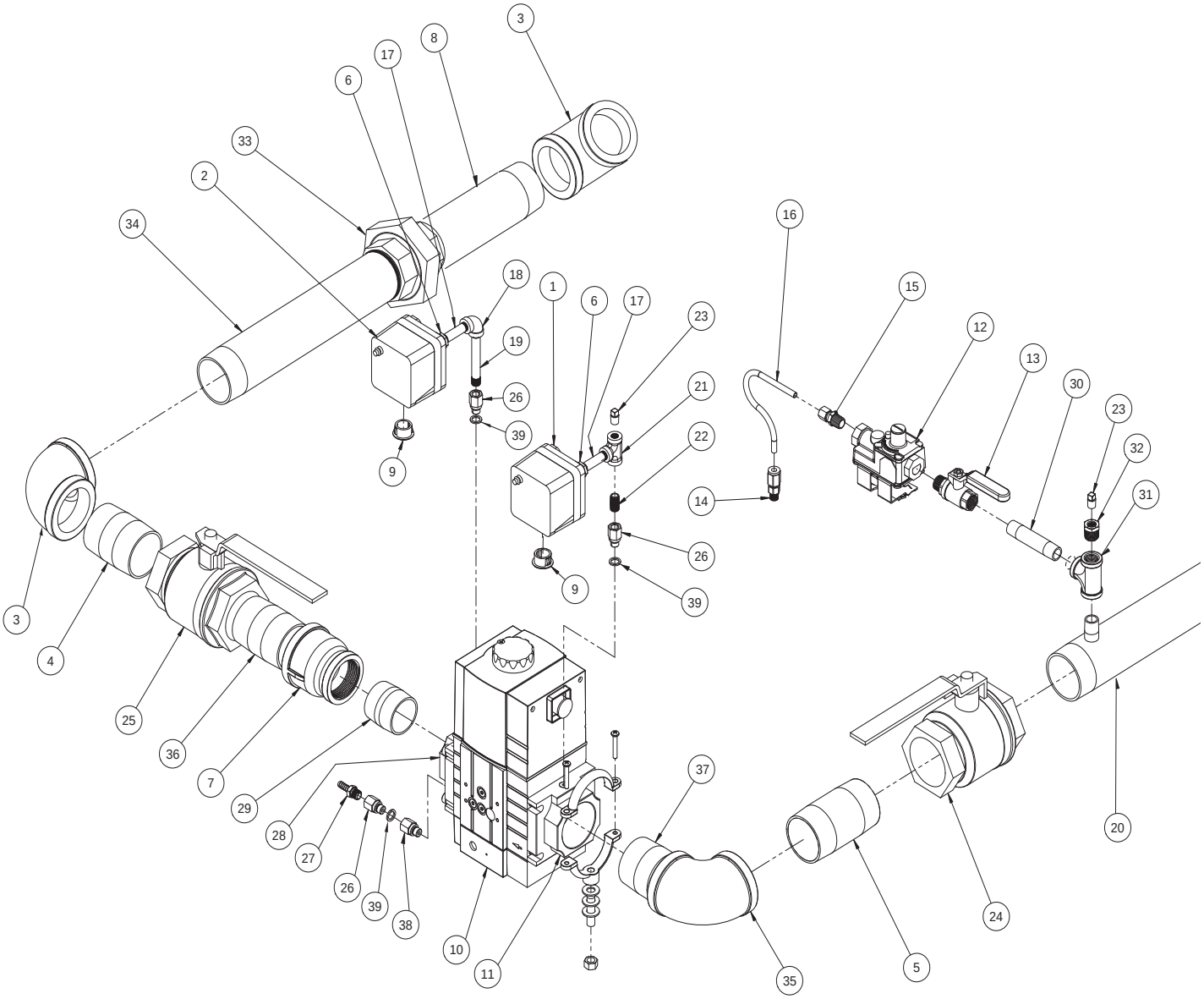

Gas Train Assembly (Models 1600, 2000, 2500 and 3000)

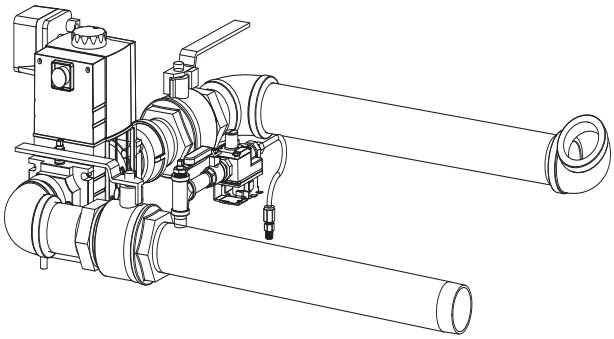

13.B.11 Gas Train Assembly, Part Numbers (Models 1600, 2000, 2500 and 3000)

		1600	2000	2500	3000
Item #	Description	Part No.	Part No.	Part No.	Part No.
1	Pressure switch, low gas	R2004100	R2004100	R2004100	R2004100
2	Pressure switch, high gas	R2004000	R2004000	R2004000	R2004000
3	Elbow	P0008400	P0008600	P0008700	P0008700
4	Nipple	P0015700	P0019800	P0021200	P0021200
5	Nipple, 2"NPTx4"	P2095800	P0022600	P0022600	P0022600
6	Bushing, reducing, 1/4x1/8	P2032400	P2032400	P2032400	P2032400
7	Adapter, 2"NPTx1-1/2"NPT	P0003900	N/A	P2085700	P2085700
8	Nipple	P0053400	P2092800	P2091600	P2091600
9	Bushing, nylon	S0064900	S0064900	S0064900	S0064900
10	Gas valve, main	V2023000	V2021200	V2021200	V2021200
11	Flange, gas valve	V2024400	V2021900	V2021900	V2021900
12	Pilot regulator	V2022100	V2022100	V2022100	V2022100
13	Ball valve, 3/8"	V2022200	V2022200	V2022200	V2022200
14	Compression fitting, 1/4" tube	NA	P2085000	P2085000	P2085000
15	Compression fitting, 1/4" tube x 1/4NPT	P0004100	P0004100	P0004100	P0004100
16	Pilot tube	16N6027	20N5086	30N6027	30N6027
17	Nipple, 1/8"x2"	P0011300	P0011300	P0011300	P0011300
18	Elbow, 1/8"	P2008900	P2008900	P2008900	P2008900
19	Nipple, 1/8"	P0011100	P0011100	P0011100	P0011100
20	Nipple/tee weldment	30N6031	30N6031	30N6031	30N6031
21	Tee, 1/8"	P0027100	P0027100	P0027100	P0027100
22	Nipple, 1/8" x close	P0011100	P0011100	P0011100	P0011100
23	Plug	70-236	70-236	70-236	70-236
24	Ball valve	V2003300	V2003300	R2011600	R2011600
25	Ball valve	V2003000	V2003200	R2011600	R2011600
26	Adapter, 1/8 FNPT x 1/8 ISO male	P2089600	P2089600	P2089600	P2089600
27	Adapter, 1/4 tube barb to 1/8 NPT male	P2097800	P2089300	P2089300	P2089300
28	Flange, adjustable shutter	V2023200	V2022400	V2022000	V2022000
29	Nipple, 1-1/2" x close	P0015500	N/A	P0019100	P0019100
30	Nipple, 3/8"x3"	P2090500	P2090500	P2090500	P2090500
31	Tee, 3/8x3/8x3/8	P2090600	P2090600	P2090600	P2090600
32	Bushing, reducing, 3/8x1/8	P2090700	P2090700	P2090700	P2090700
33	Union	P0030500	P0030700	N/A	N/A
34	Nipple	P0053400	P2072800	N/A	N/A
35	Elbow	P0008700	P0008700	P0008700	P0008700
36	Nipple	P0015700	P0015500	P0021200	P0021200
37	Nipple	P2095900	P0021200	P0021200	P0021200
38	Nozzle Orifice, 0.2 mm	P2105100	N/A	N/A	N/A
39	Washer, Sealing	S2123500	S2123500	S2123500	S2123500

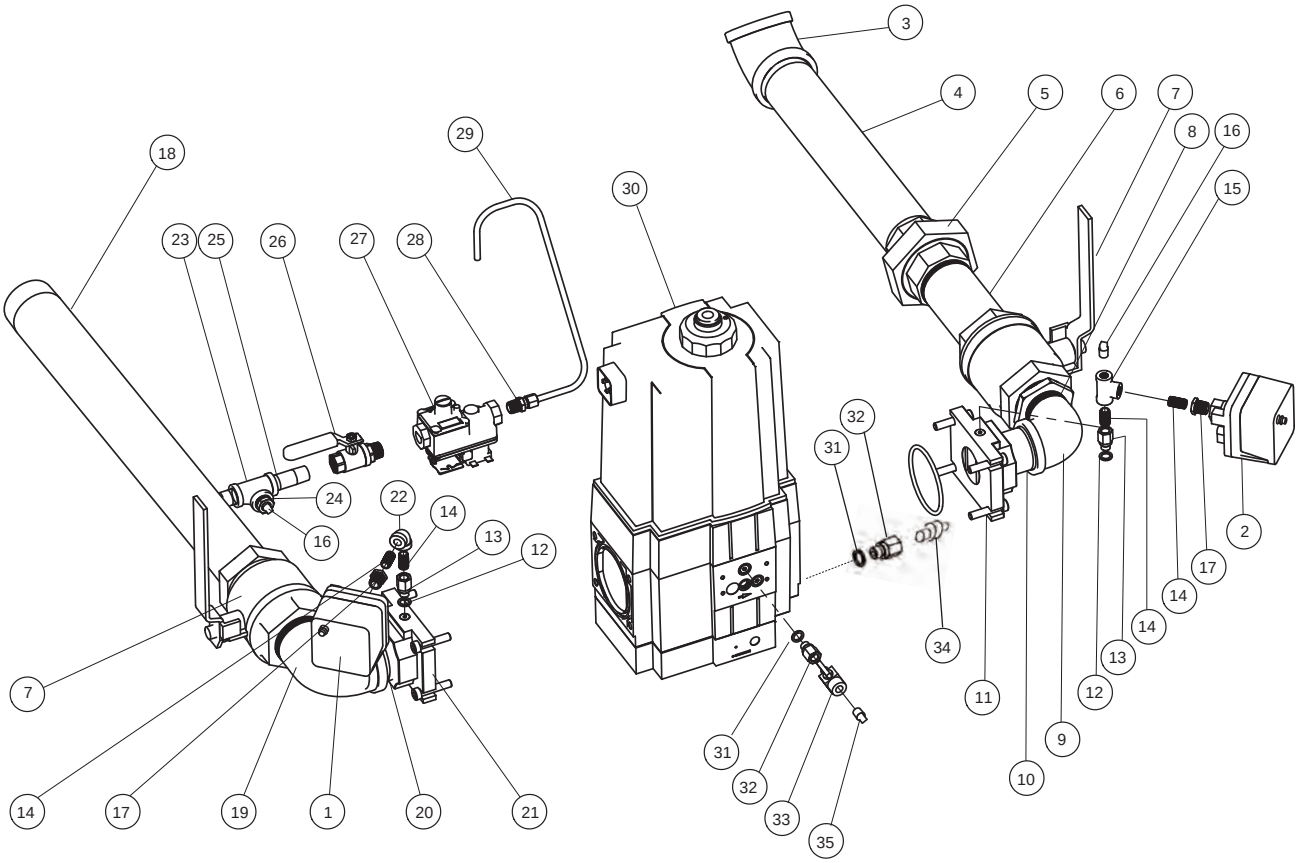

Gas Train Assembly (Models 3500 and 4000)

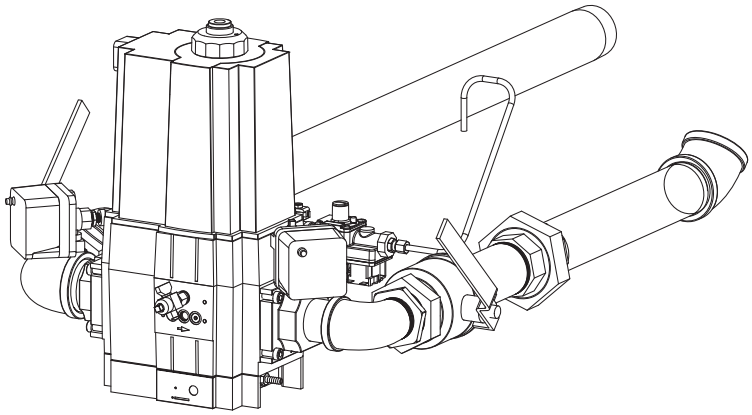

13.B.12 Gas Train Assembly, Part Numbers (Models 3500 and 4000)

		3500	4000
Item #	Description	Part No.	Part No.
1	Pressure switch, low gas	R2004100	R2004100
2	Pressure switch, high gas	R2004000	R2004000
3	Elbow, 45°, 2"	P2090900	P2090900
4	Nipple, 2"x14"	P2091000	P2091000
5	Union, 2"	P0030800	P0030800
6	Nipple, 2"x6"	P0021700	P0021700
7	Ball valve	R2011600	R2011600
8	Bushing, 2"x1-1/2"	P0001400	P0001400
9	Elbow, 90°, 1-1/2"	P0009600	P0009600
10	Nipple, 1-1/2"x2.5"	**P2906600**	P2045300
11	Flange, adjustable shutter	V2022000	V2022000
12	Washer, sealing	S2123500	S2123500
13	Adapter, 1/8 FNPT x 1/8 ISO Male	P2089600	P2089600
14	Nipple, 1/8 x close	P0011100	P0011100
15	Tee, 1/8"	P0027100	P0027100
16	Plug, 1/8"	70-236	70-236
17	Bushing, 1/4"x1/8"	P2032400	P2032400
18	Pipe, gas inlet	40N6034	40N6034
19	Elbow, 90°, 2"	P2091100	P2091100
20	Nipple, 2"x2"	P0021100	P0021100
21	Flange, 2"	V2021900	V2021900
22	Elbow, 90°, 1/8"	P2008900	P2008900
23	Tee, 3/8"	P2090600	P2090600
24	Bushing, 3/8"x1/8"	P2090700	P2090700
25	Nipple, 3/8"x2"	P2089000	P2089000
26	Ball valve, 3/8"	V2022200	V2022200
27	Pilot regulator	V2022100	V2022100
28	Compression fitting, 1/4" tube x 1/4NPT	P0004100	P0004100
29	Pilot tube	40N6025	40N6025
30	Valve, Gas, Dungs	V2021200	V2022300 NAT V2021200 PROP
31	Washer, Sealing,1/8 BSPP Fitting Dung	S2123500	S2123500
32	Adapter, Fem to Male, 1/8 FNPT X 1/8 IS	P2089600	P2089600
33	Valve, Manual, Brnz, 1/8 MNPTx1/8 FNP	W2000300	W2000300
34	Adapter, 1/4" Barb	P2089300	P2089300
35	Pipe Plug, Malleable Iron, Black, 1/8 NP	70-236	70-236

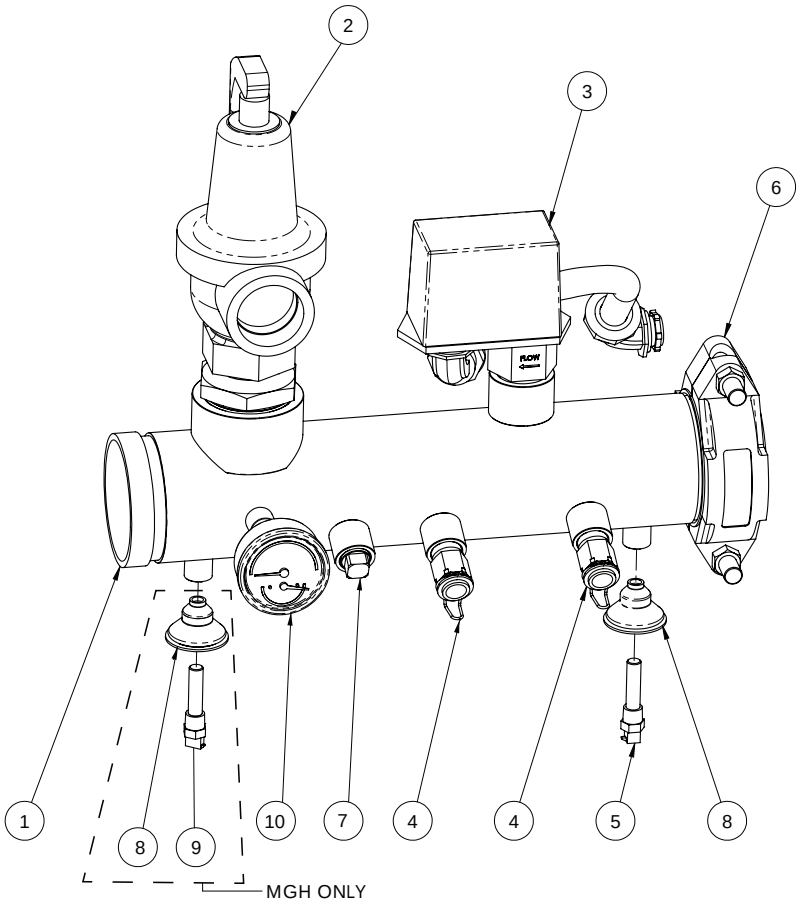

13.B.13 Waterway Outlet Assembly, Part Numbers

		1600	2000	2500	3000	3500	4000
Item #	Description	Part No.	Part No.	Part No.	Part No.	Part No.	Part No.
1	Pipe, outlet manifold	20N4023	20N4023	30N4020	30N4020	40N4020	40N4020
2	PRV 75# (MGH)	A0002700	A0002700	A0000300	A0000300	A208000	A208000
	PRV 125# (MGV)	A0064400	A0064400	A0000200	A0000200	A0000200	A0000200
3	Flow switch	RE0013000	RE0013000	RE0013000	RE0013000	RE0013000	RE0013000
	Flow switch paddle	E2255800	E2255800	E2255800	E2255800	E2255900	E2255900
4	Well, immersion, 1/2"NPT	RE2058300	RE2058300	RE2058300	RE2058300	RE2058300	RE2058300
5	Sensor, water temperature, duplex	RE2319900	RE2319900	RE2319900	RE2319900	RE2319900	RE2319900
6	Coupling, flexible victaulic	P2086500	P2086500	P2086500	P2086500	P2086600	P2086600
7	Plug						
	MGH	N/A	N/A	P2088300	P2088300	P2088300	P2088300
	MGV	N/A	N/A	P2080300	P2080300	P2080300	P2080300
8	Grommet, rubber	S2114000	S2114000	S2114000	S2114000	S2114000	S2114000
9	Sensor, water temperature (MGH)	RE2320600	RE2320600	RE2320600	RE2320600	RE2320600	RE2320600
10	Gauge, temp & pressure	RA0079000	RA0079000	RA0079000	RA0079000	RA0079000	RA0079000

Notes:

All Manuals (Install & Operate, Start Up, and Service Manuals) can be downloaded at

For Laars Product and Service VIDEOS

https://www.youtube.com/user/laarsHeating

Dimensions and specifications subject to change without notice in accordance with our policy of continuous product improvement.

H

HLW

H23592 00J

LAARS Heating Systems Company
A subsidiary of BRADFORD WHITE Corporation

Customer Service and Product Support: **800.900.9276 • Fax 800.559.1583**
Headquarters: **20 Industrial Way, Rochester, NH, USA 03867 • 603.335.6300 • Fax 603.335.3355**
9 Brigden Gate, Halton Hills, Ontario, Canada L7G 0A3 (905) 203-0600 Fax: (905) 636-0666
www.Laars.com

Litho in U.S.A. © Laars 1810 Document 1276J