SECTION 10 Parts List and Illustrations.

FTCF**140**

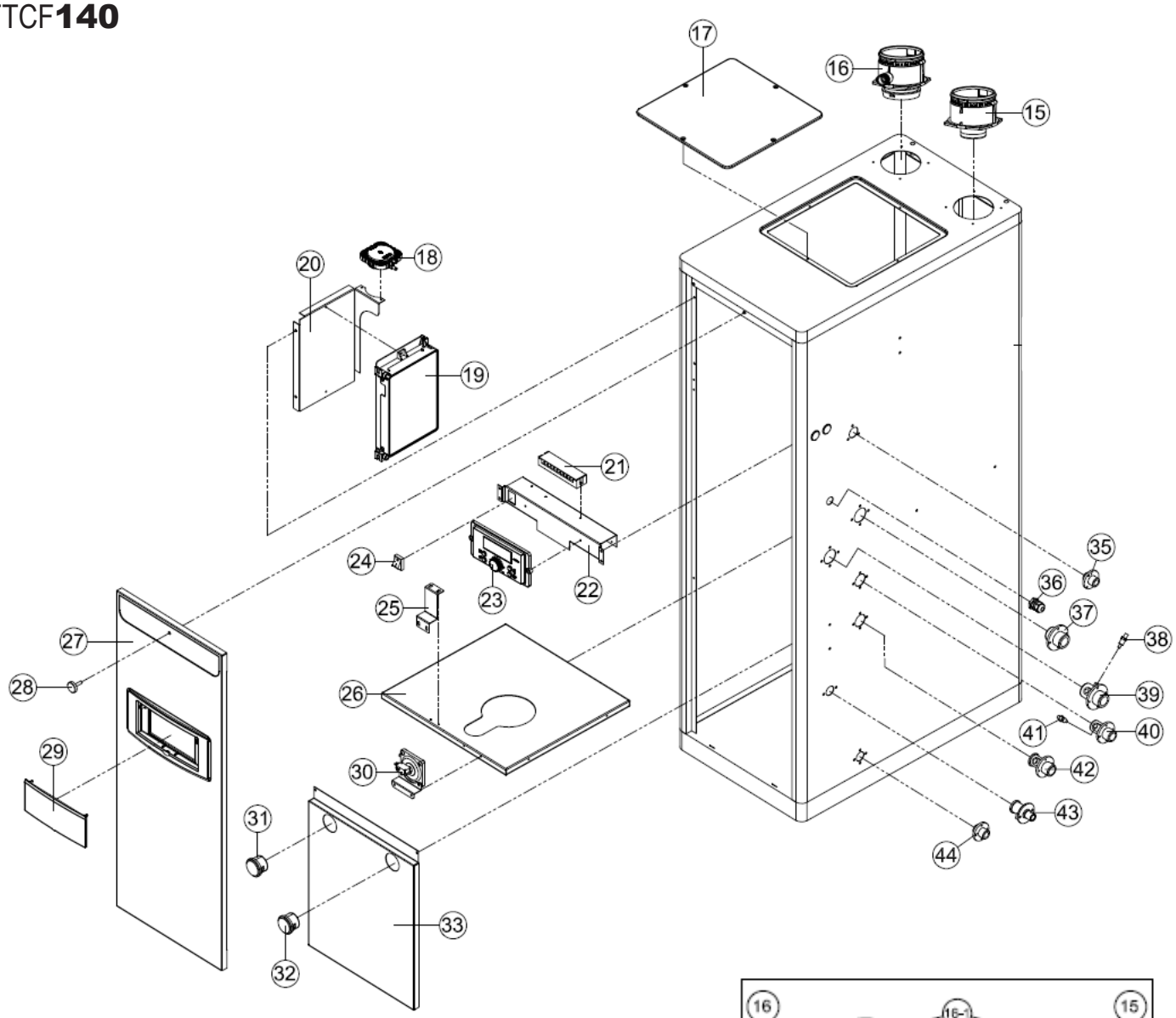

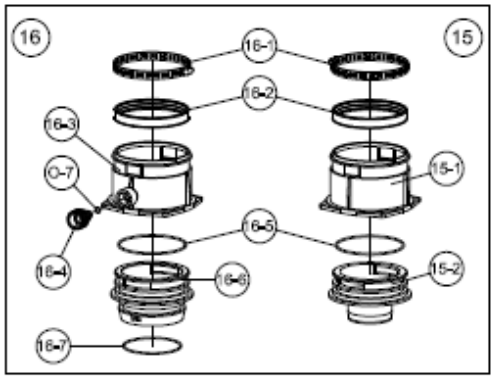

No.	Description	Part Number
O-7	O-Ring P7	FT1601
15	Air inlet duct Ass'y	FT1010
15-1	Air inlet duct	FT1605
15-2	Air inlet adaptor(Inside)	FT1612
16	Exhaust vent duct Ass'y	FT1002
16-1	Stainless band(Ø100)	FT1603
16-2	Packing	FT1604
16-3	Exhaust vent duct	FT1611
16-4	Exhaust testing cap	FT1606

No.	Description	Part Number
16-5	O-Ring P85	FT1607
16-6	Exhaust vent adaptor(Inside)	FT1608
16-7	O-Ring P75	FT1609
17	Upper AS Cover	FT1891
18	Air pressure sensor(18)	FT1015
19	PCB Control (GTX-920CP)	FT1616
20	Control bracket	FT1617
21	Terminal block(10P)	FT1021
22	Control sub bracket	F1951
23	Display Control (P-920C)	FT1019
24	Power switch	FT1020
25	DHW Tank Cover BK	FT1622
26	Casing(Bottom)	FT1952
27	Front Cover(Upper)	FT1911
28	Casing Bolt	FT1830
29	Control display cover / window	FT1024
30	Condensate blockage, Air pressure switch	FT1022
31	Pressure gauge 150 Psi	FT1628
32	Pressure gauge 60 Psi	FT1629
33	Front Cover(Down)	FT1630
35	Gas inlet adaptor	FT1893
36	Cable gland	FT1633
37	CH supply connector	FT1634
38	CH Return sensor	FT1635
39	CH return adaptor	FT1636
40	DHW outlet adaptor	FT1637
41	DHW Outlet sensor	FT1638
42	DHW inlet connector	FT1639
43	Stainless connector	FT1892
44	Drain Adaptor	FT1641

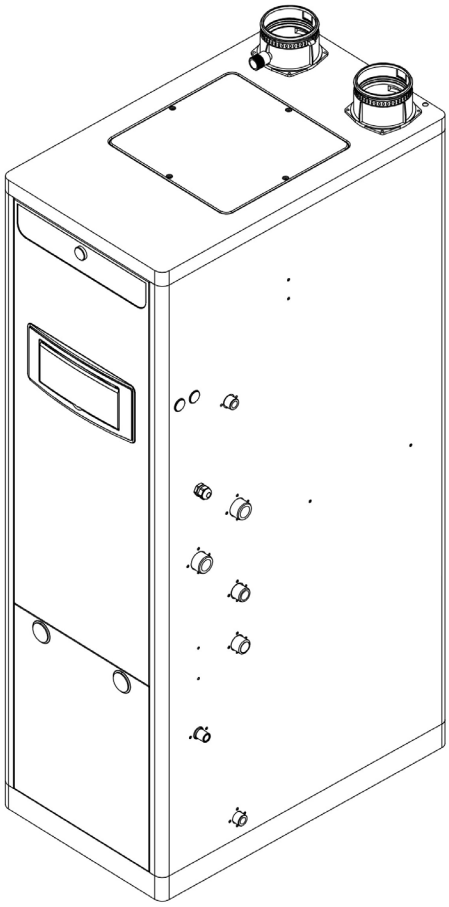

Heat Exchanger

FTCF**140**

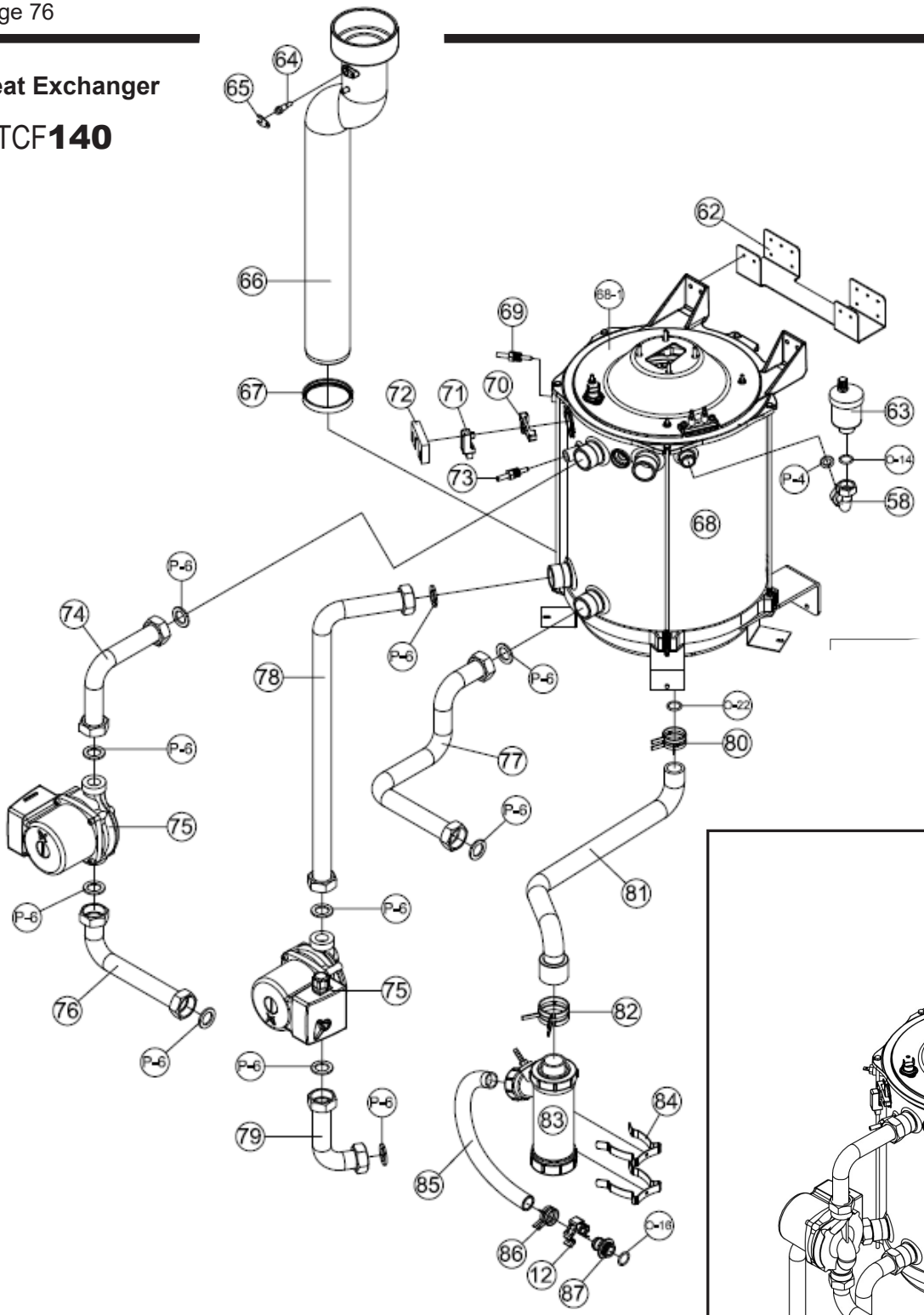

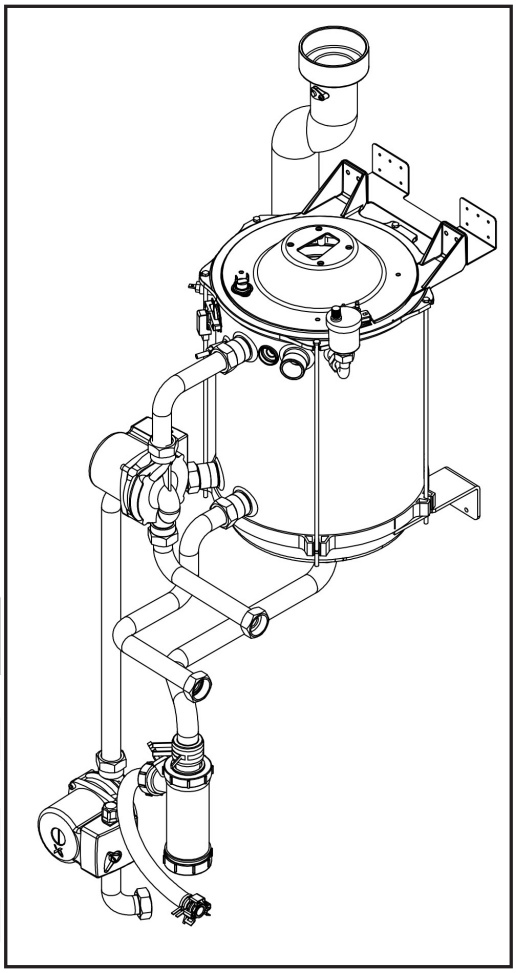

No.	Description	Part Number
O-14	O-Ring P14	FT1642
O-16	O-Ring P16	FT1643
O-22	O-Ring P22	FT1644
P-4	1/2" Packing	FT1875
P-6	1" Packing	FT1691
12	Flow sensor clip	FT1208
58	Elbow Pipe connector 1	FT1648

No.	Description	Part Number
62	Heat Exchanger BK	FT1649
63	Air Vent	FT1321
64	Exhaust overheat sensor	FT1307
65	Exhaust sensor bracket	FT1529
66	Exhaust pipe	FT1654
67	Exhaust pipe packing (lower)	FT1666
68	Heat Exchanger Ass'y	FT1655
68-1	Burner Ass'y	FT1309
68-2	Overheat sensor	FT1310
68-3	Burner upper case	FT1658
68-4	Ceramic paper	FT1659
68-5	Burner	FT1314
68-6	Burner case sealing O-Ring	FT1661
68-7	Ignition rod	FT1315
68-8	Ignition rod gasket	FT1316
68-9	Burner downside case	FT1664
68-10	Refractory	FT1665
69	Low level sensor	FT1325
70	Flame detector sensor bracket	FT1669
71	Flame detector sensor	FT1327
72	Flame detector sensor cover	FT1069
73	Temperature sensor	FT1324
74	Pipe for internal circulation (upper)	FT1671
75	Pump	FT1672
76	Pipe for internal circulation (below)	FT1673
77	CH return pipe (below)	FT1675
78	CH outlet pipe (upper)	FT1674
79	CH outlet pipe (below)	FT1676
80	Clamp (Ø34)	FT1677
81	Condensate trap hose	FT1678
82	Clamp (Ø40)	FT1679
83	Condensate trap Ass’y	FT1328
84	Condensate bracket	FT1845
85	Condensate outlet hose	FT1681
86	Clamp (Ø23)	FT1682
87	Condensate outlet fitting	FT1683

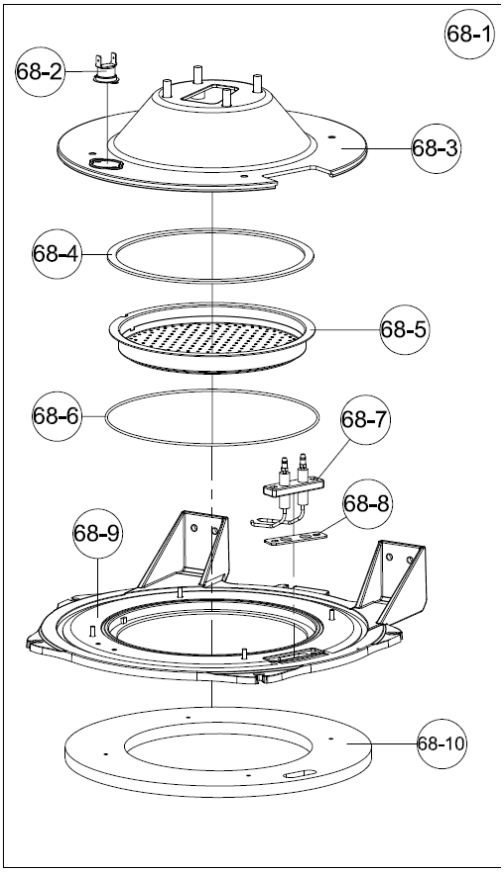

FTCF**140**

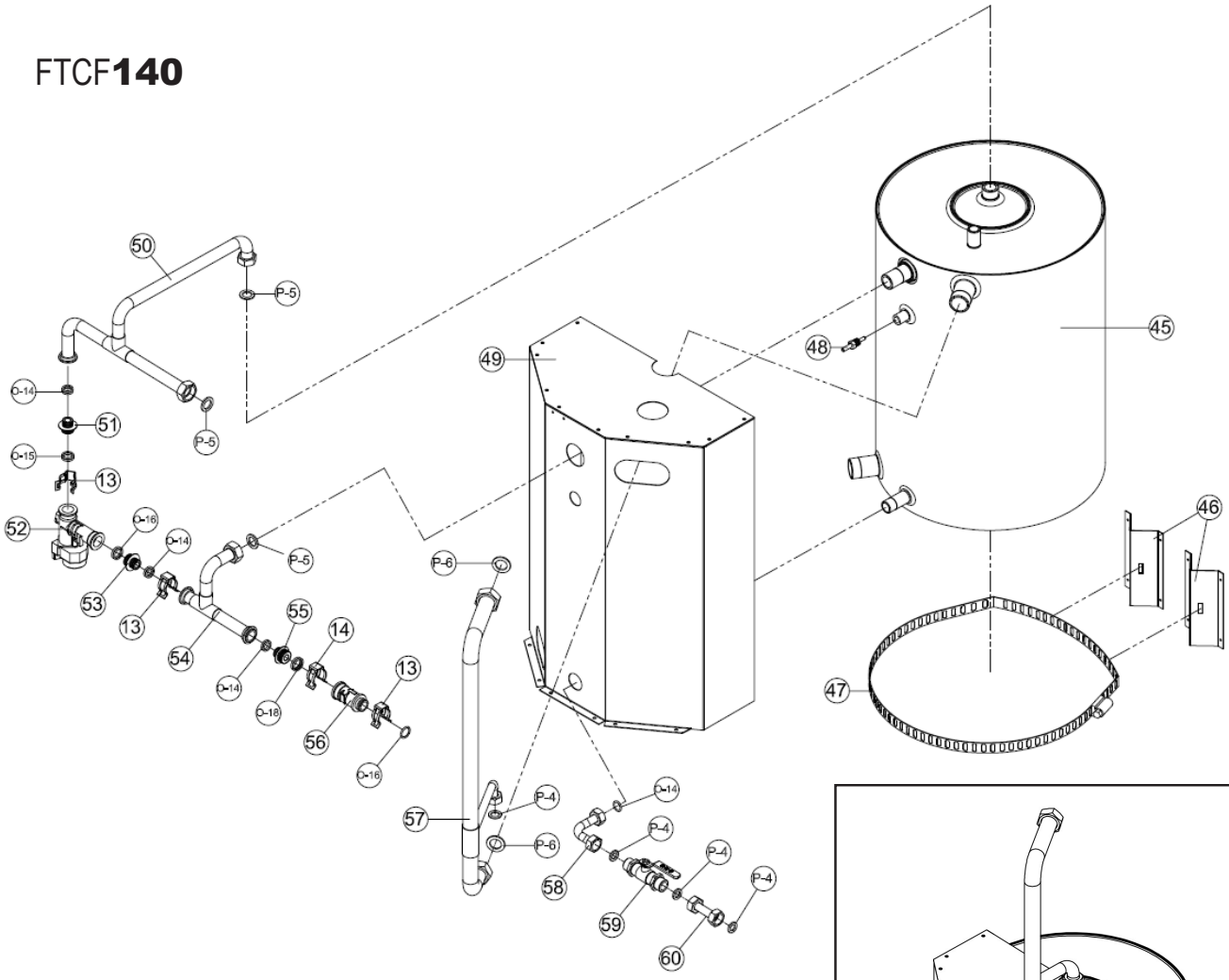

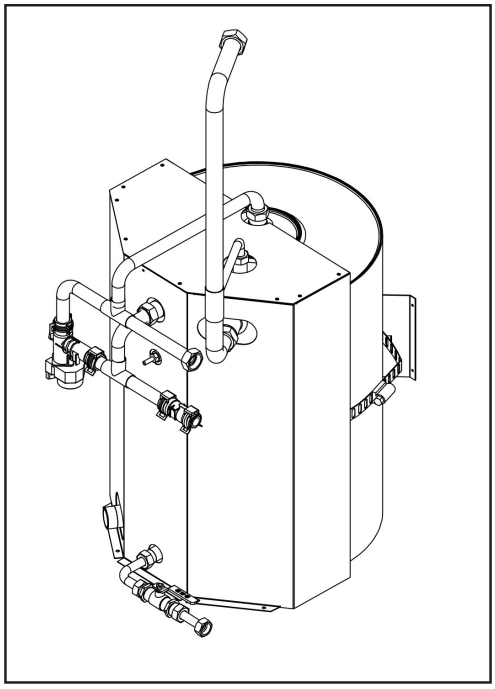

No.	Description	Part Number
O-14	O-Ring P14	FT1642
O-15	O-Ring P15	FT1685
O-16	O-Ring P16	FT1643
O-18	O-Ring P18	FT1687
P-4	1/2" Packing	FT1875
P-5	3/4" Packing	FT1646
P-6	1" Packing	FT1691
13	Clip for Cold water inlet 1	FT1692
14	Clip for Cold water inlet 2	FT1693
45	DHW Tank	FT1694
46	DHW Tank bracket	FT1696
47	Stainless band(Ø415)	FT1697
48	DHW Tank temperature sensor	FT1695
49	DHW Tank cover Ass'y	FT1698
50	DHW Outlet Pipe	FT1699
51	15 O-Ring adapter	FT1700
52	Mixing valve	FT1701
53	16 O-Ring adapter	FT1702
54	DHW inlet Pipe	FT1703
55	18 O-Ring adapter	FT1704
56	Flow sensor	FT1115
57	DHW Tank outlet pipe	FT1706
58	Elbow Pipe connector 1	FT1648
59	Drain valve	FT1708
60	Drain pipe connector 2	FT1709

Blower

FTCF**140**

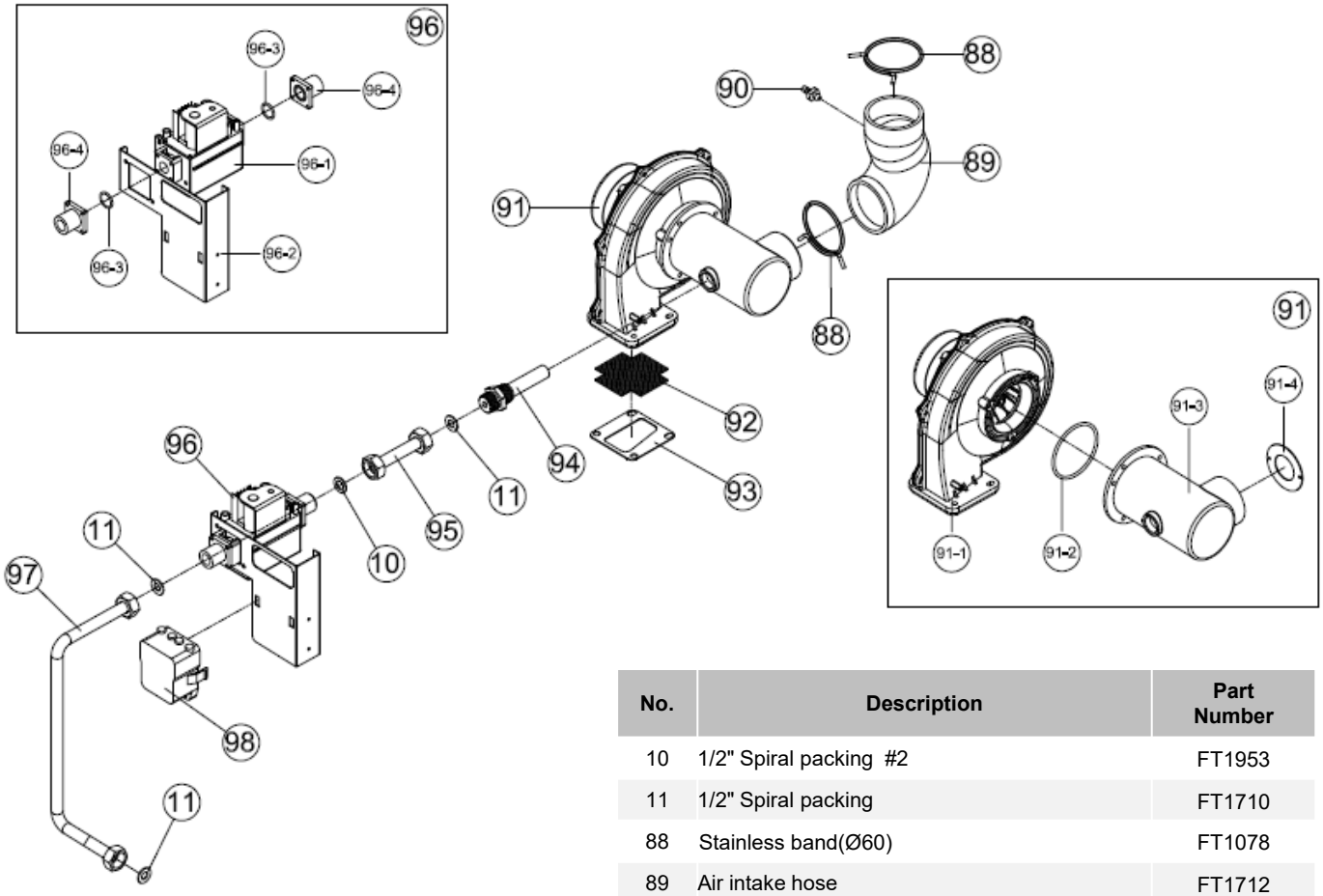

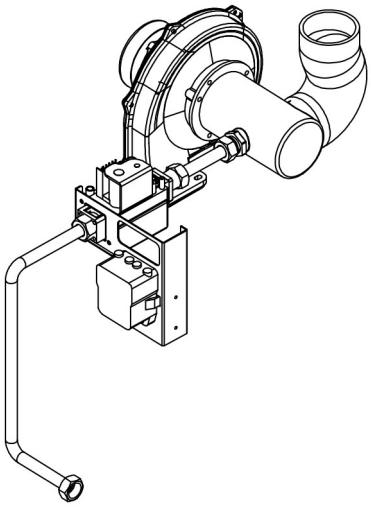

No.	Description	Part Number
10	1/2" Spiral packing #2	FT1953
11	1/2" Spiral packing	FT1710
88	Stainless band(Ø60)	FT1078
89	Air intake hose	FT1712
90	Intake silicon adaptor	FT1713
91	Fan Ass'y	FT1714
91-1	Fan	FT1715
91-2	Fan sealing O-Ring	ST1038
91-3	Gas mixer housing	FT1409
91-4	Intake orifice	FT1718
92	Mash	FT1720
93	Fan rubber packing(1.0t)	FT1721
94	Nozzle Ass'y(LNG)	FT1412N5
	Nozzle Ass'y(LPG)	FT1412P5
95	Gas pipe (upper)	FT1723
96	Gas Valve Ass'y	FT1724
96-1	Gas Valve	FT1416
96-2	Gas valve bracket	FT1726
96-3	Gas valve O-Ring	FT1727
96-4	Gas valve inlet adaptor	FT1538
97	Gas pipe (below)	FT1729
98	Ignition Transformer	ST1006

CASE

FTCF199

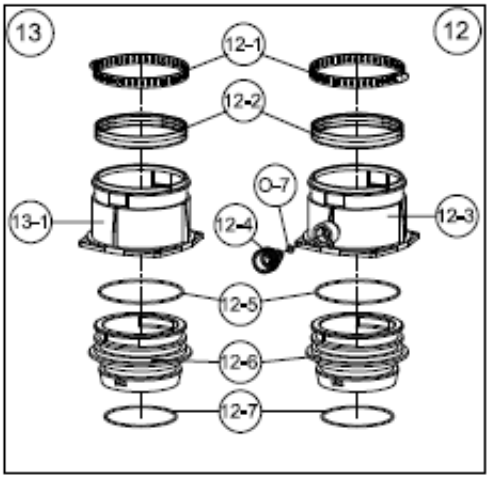

No.	Description	Part Number
O-7	O-Ring P7	FT1601
12	Exhaust vent duct Assembly	FT1002
12-1	Stainless band (Ø100)	FT1603
12-2	Packing	FT1604
12-3	Exhaust vent duct	FT1611
12-4	Exhaust testing cap	FT1606
12-5	O-Ring P85	FT1607
12-6	Exhaust vent adaptor (Inside)	FT1608
12-7	O-Ring P75	FT1609

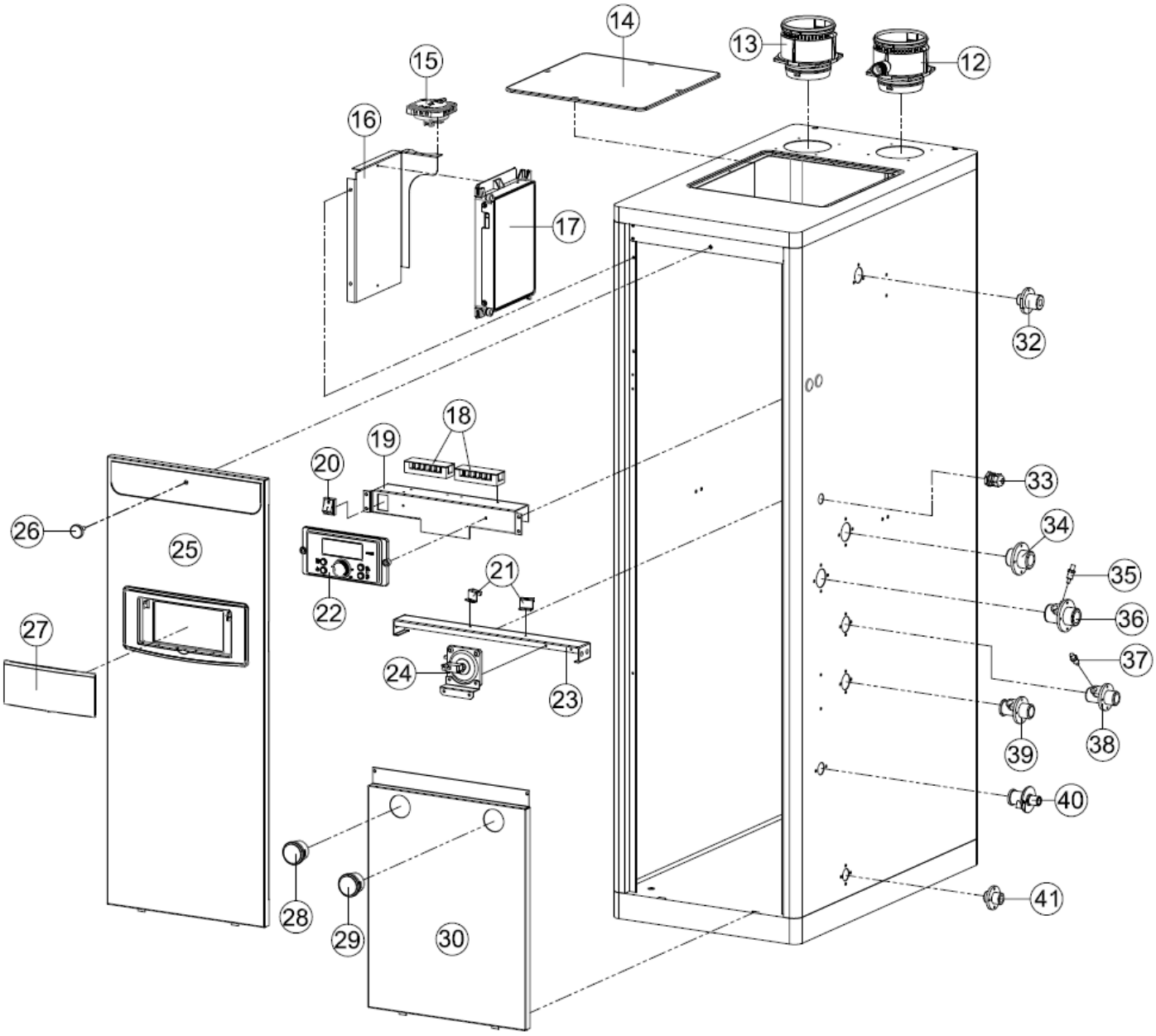

No.	Description	Part Number
13	Air inlet duct Assembly	FT1909
13-1	Air inlet duct	FT1605
14	Upper AS Cover	FT1891
15	Air pressure sensor (80)	FT1804
16	Control bracket	FT1617
17	PCB Control (GTX-920CP)	FT1898
18	Terminal block (6p)	FT1827
19	Control sub bracket	FT1619
20	Power switch	FT1020
21	Condensate body fix bracket	FT1828
22	Display Control (P-920C)	FT1019
23	Bracket	FT1910
24	Condensate blockage, Air pressure switch	FT1022
25	Front Cover (Upper)	FT1911
26	Casing Bolt	FT1830
27	Control display cover / window	FT1024
28	Pressure gauge 150psi	FT1628
29	Pressure gauge 60psi	FT1629
30	Front cover (Down)	FT1831
32	Gas inlet adaptor	FT1889
33	Cable gland	FT1633
34	CH supply connector	FT1634
35	CH Return sensor	FT1635
36	CH return adaptor	FT1636
37	DHW Outlet sensor	FT1638
38	DHW outlet adaptor	FT1637
39	DHW inlet connector	FT1639
40	Stainless connector	FT1892
41	Drain Adaptor	FT1641

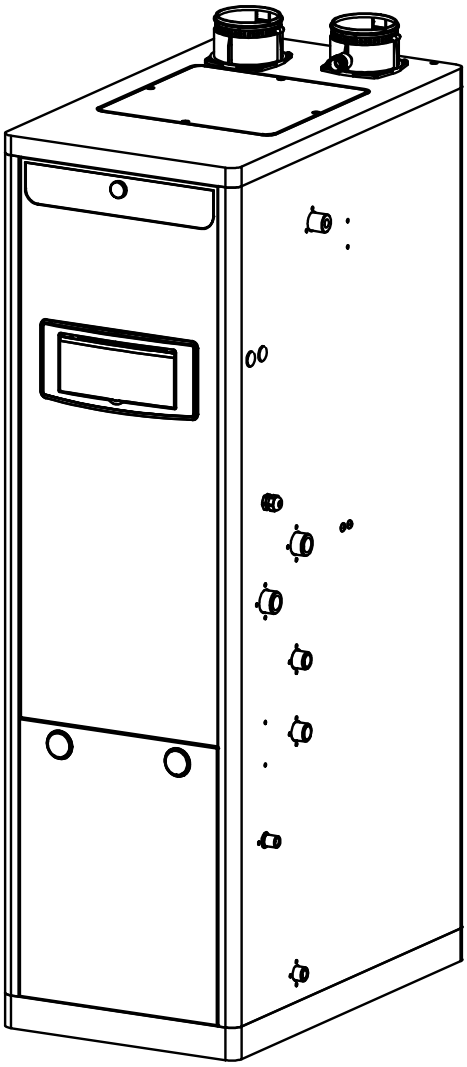

Heat Exchanger

FTCF**199**

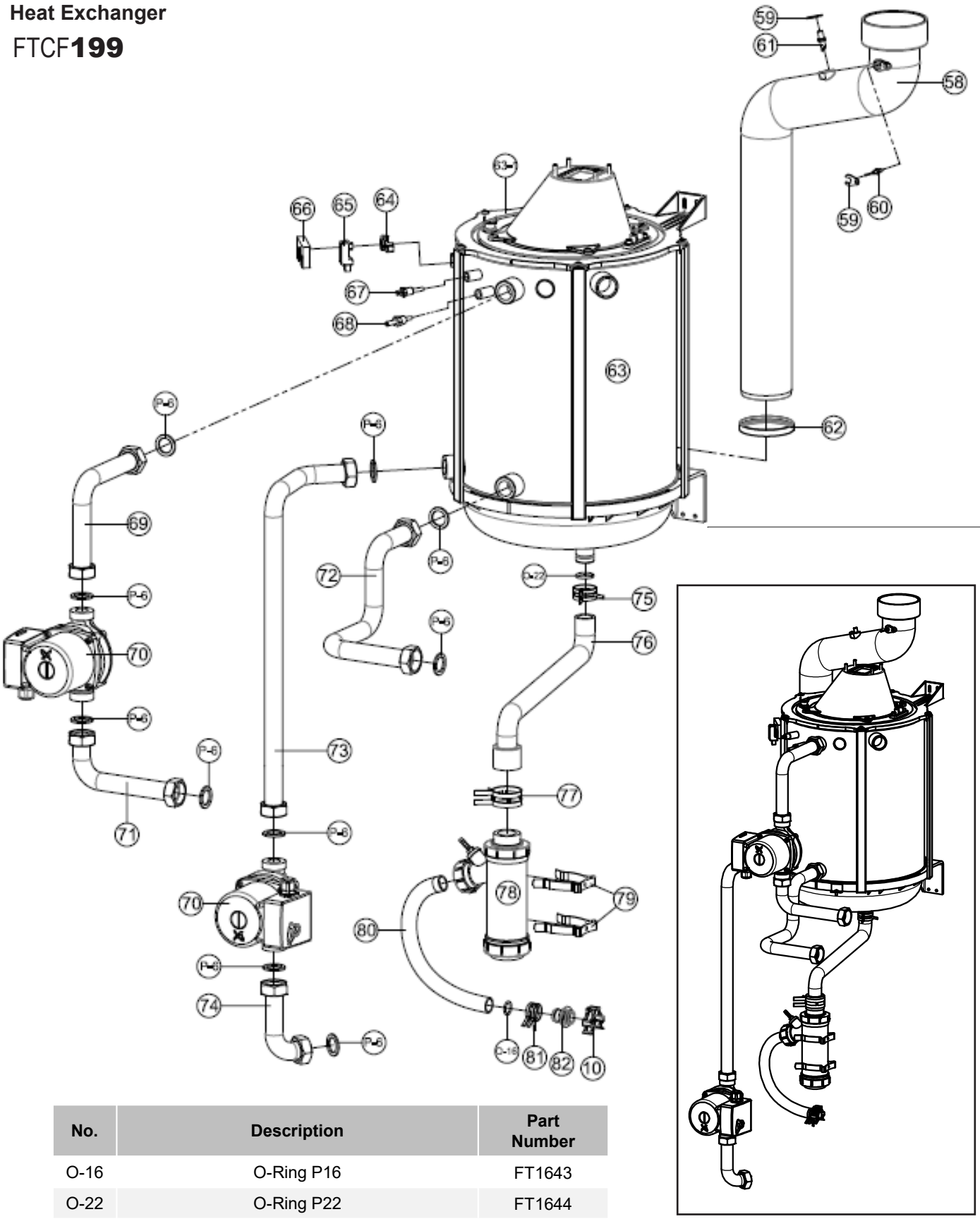

No.	Description	Part Number
O-16	O-Ring P16	FT1643
O-22	O-Ring P22	FT1644
P-6	1" Packing	FT1691
10	Flow Sensor Clip	FT1208

	Description	Part Number
58	Exhaust Pipe	FT1823
59	Exhaust sensor bracket	FT1529
60	Exhaust overheat sensor	FT1307
61	EX-Adaptor	FT1784
62	Exhaust pipe packing (lower)	FT1836
63	Heat Exchanger Assembly	FT1837
63-1	Burner Assembly	FT1796
63-2	Burner upper case	FT1760
63-3	Burner gasket	FT1824
63-4	Burner	FT1762
63-5	Ignition rod	FT1763
63-6	Ignition rod Gasket	FT1316
63-7	Overheat sensor	FT1310
63-8	Burner downside case	FT1764
63-9	Refractory	FT1826
64	Flame detector sensor bracket	FT1669
65	Flame detector sensor	FT1327
66	Flame detector sensor cover	FT1069
67	Low level sensor	FT1325
68	Temperature sensor	FT1324
69	Pipe for internal circulation (upper)	FT1914
70	Pump	FT1767
71	Pipe for internal circulation (below)	FT1840
72	CH return pipe (below)	FT1841
73	CH outlet pipe (upper)	FT1842
74	CH outlet pipe (below)	FT1843
75	Clamp (Ø34)	FT1677
76	Condensate trap hose	FT1844
77	Clamp (Ø40)	FT1679
78	Condensate trap Assembly	FT1328
79	Condensate bracket	FT1845
80	Condensate outlet hose	FT1681
81	Clamp (Ø23)	FT1682
82	Condensate outlet fitting	FT1683

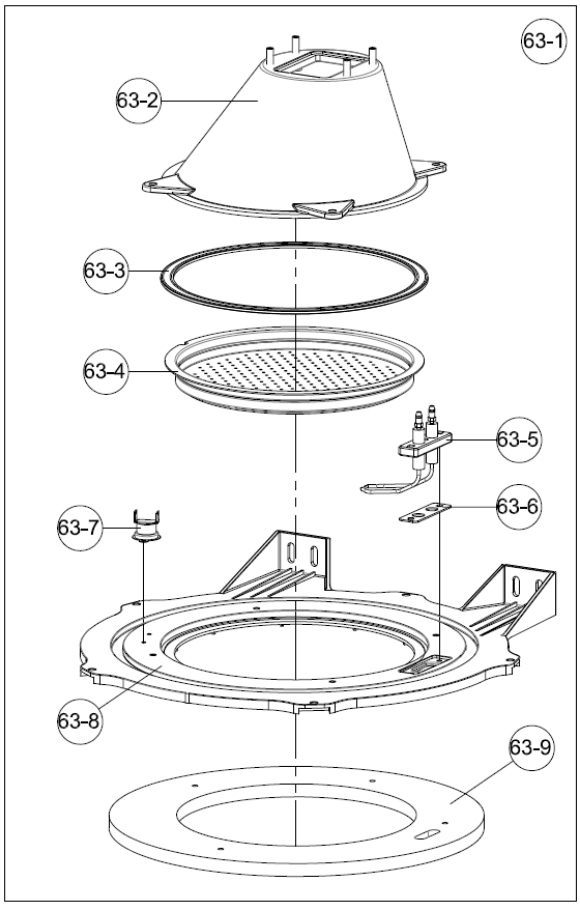

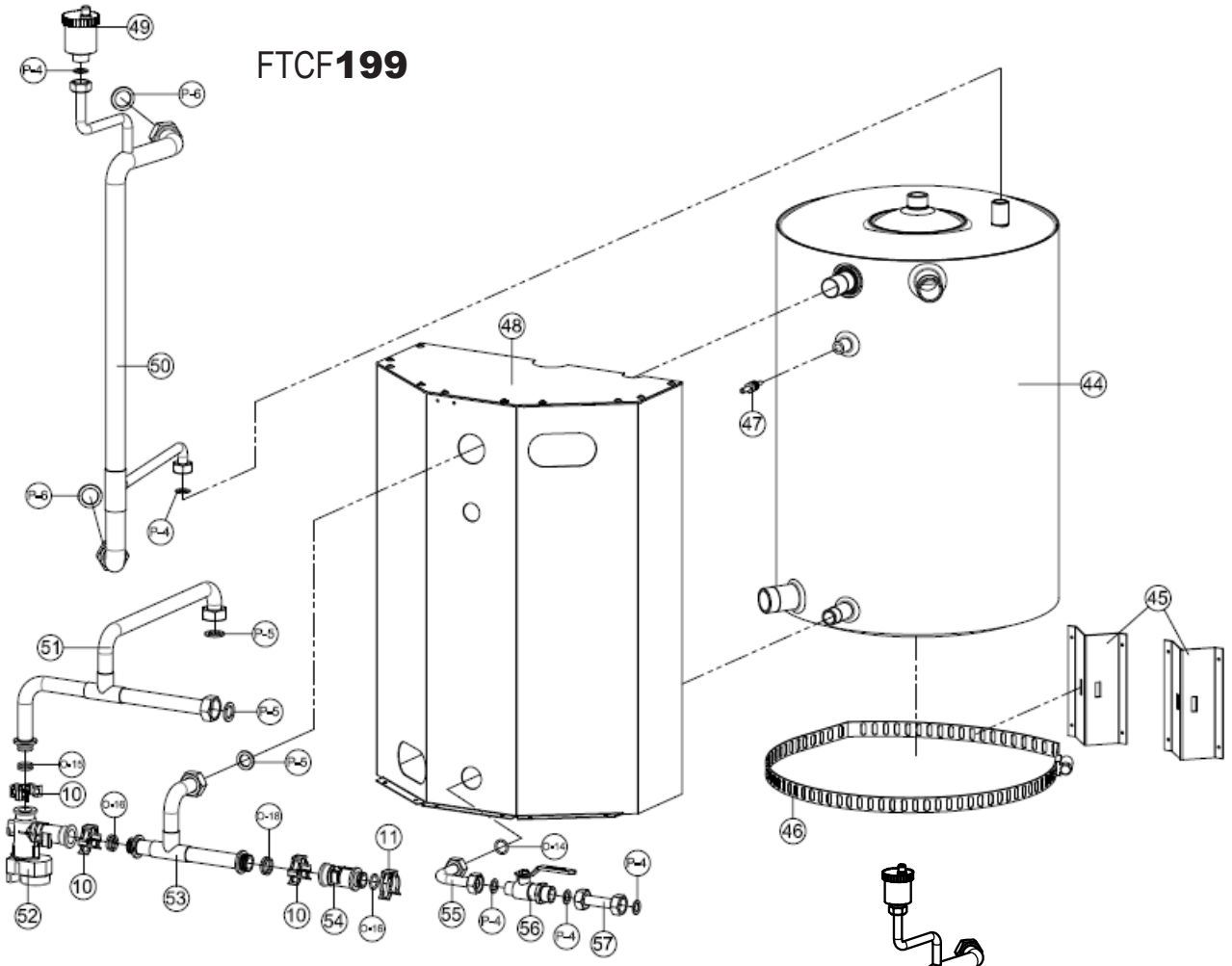

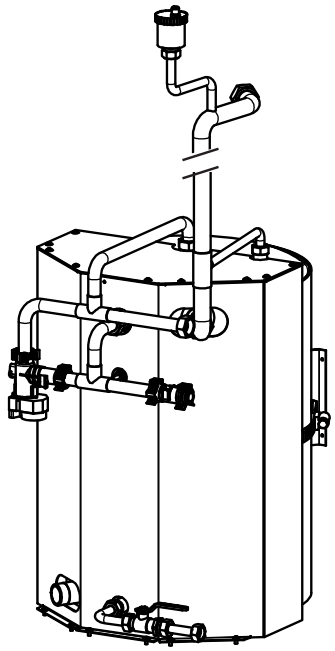

No.	Description	Part Number
O-15	O-Ring P15	FT1685
O-16	O-Ring P16	FT1643
O-18	O-Ring P18	FT1687
P-4	1/2" Packing	FT1875
P-5	3/4" Packing	FT1646
P-6	1" Packing	FT1691
10	Flow Sensor Clip	FT1208
11	Clip for Cold water inlet 1	FT1692
44	DHW Tank	FT1912
45	DHW Tank bracket	FT1696
46	Stainless band (Ø415)	FT1697
47	DHW Tank temperature sensor	FT1695
48	DHW Tank cover Assembly	FT1913
49	Air vent	FT1321
50	DHW Tank outlet pipe	FT1833
51	DHW Outlet Pipe	FT1834
52	Mixing valve	FT1116
53	DHW Inlet pipe	FT1835
54	Flow sensor	FT1115
55	Elbow Pipe connector 1	FT1648
56	Drain valve	FT1708
57	Drain pipe connector 2	FT1709

Blower

FTCF**199**

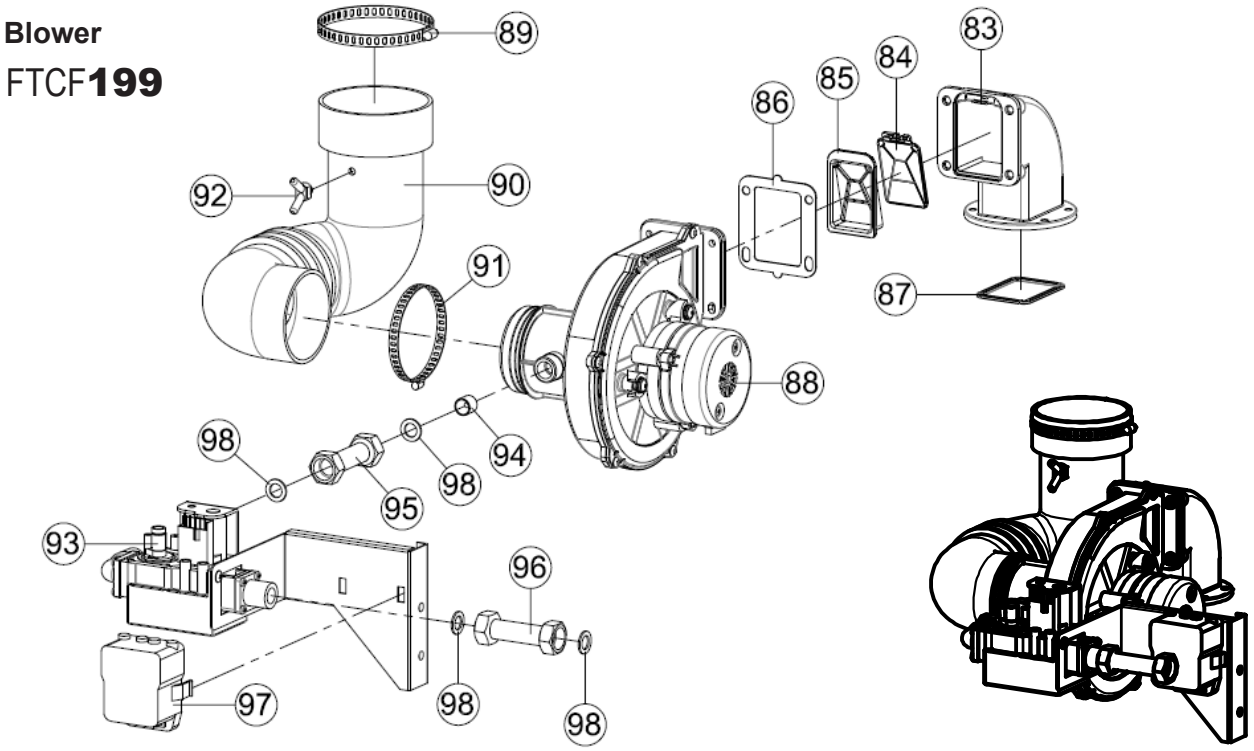

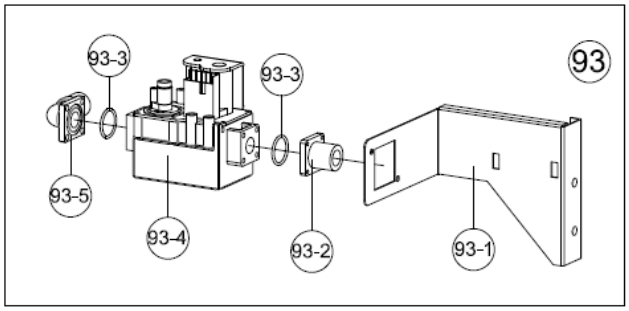

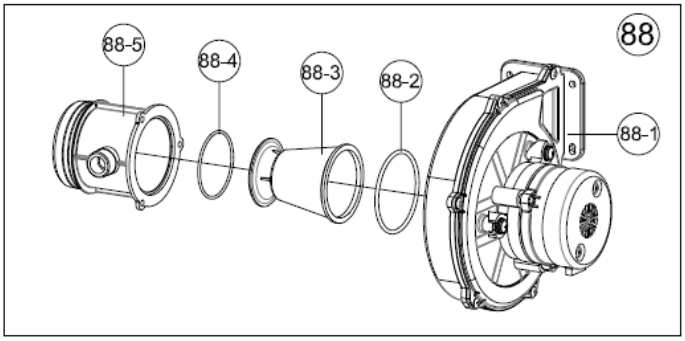

No.	Description	Part Number
83	Fan guide	FT1769
84	Damper packing	FT1770
85	Damper body	FT1915
86	Fan rubber packing (1.6t)	FT1886
87	Fan guide packing	FT1772
88	Fan Assembly	FT1916
88-1	Fan	FT1406
88-2	Fan sealing O-Ring	ST1038
88-3	AGM venturi	FT1917
88-4	AGM O-ring	FT1774
88-5	AGM body	FT1775
89	Stainless band (Ø100)	FT1603
90	Air intake hose	FT1846
91	Stainless band (Ø89)	FT1777

No.	Description	Part Number
92	Orifice	FT1918
93	Gas valve Assembly	FT1847
93-1	Gas valve bracket	FT1848
93-2	Gas valve inlet adaptor	FT1338
93-3	Gas valve O-Ring	FT1727
93-4	Gas valve	FT1416
93-5	Gas valve outlet adaptor	FT1919
94	Nozzle (natural)	FT1780
	Nozzle (propane)	FT1802
95	Gas pipe (left)	FT1849
96	Gas pipe (right)	FT1850
97	Ignition transformer	ST1006
98	1/2" Spiral packing	FT1710

Notes:

For Product and Service VIDEOS

Dimensions and specifications subject to change without notice in accordance with our policy of continuous product improvement.

H2373000D

Customer Service and Product Support: **800.900.9276 • Fax 800.559.1583**
20 Industrial Way, Rochester, NH, USA 03867

1811 Document 1320D