Installation and Operation Instructions for

FT SERIES

Wall-Mounted Modulating Condensing Gas Boiler (Includes Optional Floor Stand Accessory Information)

Model FTHW301 and FTHW399

- Natural Gas (NG) - Factory Configuration
- Propane Gas (LP) - Field-Convertible

ASME H

c ETL LISTED us Intertek

FOR YOUR SAFETY: This product must be installed and serviced by a professional service technician, qualified in hot water boiler and heater installation and maintenance. Improper installation and/or operation could create carbon monoxide gas in flue gases which could cause serious injury, property damage, or death. Improper installation and/or operation will void the warranty.

⚠ WARNING

If the information in this manual is not followed exactly, a fire or explosion may result causing property damage, personal injury or loss of life.

Do not store or use gasoline or other flammable vapors and liquids in the vicinity of this or any other appliance.

WHAT TO DO IF YOU SMELL GAS

- **Do not try to light any appliance.**
- **Do not touch any electrical switch; do not use any phone in your building.**
- **Immediately call your gas supplier from a nearby phone. Follow the gas supplier's instructions.**
- **If you cannot reach your gas supplier, call the fire department.**

Installation and service must be performed by a qualified installer, service agency, or gas supplier.

⚠ AVERTISSEMENT

Assurez-vous de bien suivres les instructions données dans cette notice pour réduire au minimum le risque d'incendie ou d'explosion ou pour éviter tout dommage matériel, toute blessure ou la mort.

Ne pas entreposer ni utiliser d'essence ou ni d'autres vapeurs ou liquides inflammables dans le à proximité de cet appareil ou de tout autre appareil.

QUE FAIRE SI VOUS SENTEZ UNE ODEUR DE GAZ:

- **Ne pas tenter d'allumer d'appareils.**
- **Ne touchez à aucun interrupteur. Ne pas vous servir des téléphones dans le bâtiment où vous vous trovez.**
- **Appelez immédiatement votre fournisseur de gaz depuis un voisin. Suivez les instructions du fournisseur.**
- **Si vous ne pouvez rejoindre le fournisseur de gaz, appelez le sservice des incendies.**

L'installation et l'entretien doivent être assurés par un installateur ou un service d'entretien qualifié ou par le fournisseur de gaz.

TABLE OF CONTENTS

SECTION 1 Introduction....3
1.1 About this Installation Manual....3
1.2 Included in the Box....4

SECTION 2 Product Characteristics....5
2.1 Model Number....5
2.2 Dimensions for FTHW301 and FTHW399 models.5
2.3 Specifications....6
2.3.1 Specifications, 301....6
2.3.2 Specifications, 399....7
2.4 Names of Components....8
2.5 Product Flow Paths and Characteristics....9
2.5.1 Central Heating flow. Boiler Heating Mode....9

SECTION 3 Safety Regulations....10
3.1 Safety Symbols....10
3.2 Safety Precautions and Proper Use....11

SECTION 4 Installation....13
4.1 Location and Clearances (wall)....13
4.1.1 Wall Mount Bracket....14
4.1.2 Mounting Location Preparation....14
4.1.3 Wall Mounting the Boiler....14
4.2 Location and Clearances for Boiler with Optional Floor Stand....15
4.2.1 Flooring & Leveling....16
4.3 Combustion Air....17
4.3.1 Combustion Air from Room....17
4.3.2 Ducted Combustion Air....17
4.4 Venting (Exhaust)....19
4.5 General Location Guideline....20
4.6 Locations for Vent Pipe Terminator....21
4.6.1 Venting Requirements in the Commonwealth of Massachusetts....22
4.7 Common Vent Test....23
4.8 Air Supply and Vent Connections....24
4.8.1 Pipe Lengths for dual pipe venting systems....24
4.9 Indoor Combustion Air....25
4.10 Vent / Air Pipe Terminations....25
4.10.1 Vertical Vent Termination....25
4.10.2 Horizontal Vent Termination....26
4.10.3 Low Profile Two-Pipe Sidewall Venting....27
4.10.4 Flexible Vent Systems....28
4.10.5 Concentric Vent Termination....29
4.11 Gas Supply and Piping....30
4.12 Gas Supply Pressure....33
4.13 Adjusting Combustion....34
4.14 High Altitude Installations. 2,000' to 10,000'....35
4.15 Natural Gas to Propane Conversion....36
4.16 Plumbing and Wiring Guidelines....40
4.16.1 Single wall-mounted boiler with DHW heating and high and low temperature zones w/ 24 V motorized mixing valve....42
4.16.2 Floor stand application: Zoning with zone valves and indirect DHW tank pump....44
4.16.3 Cascade system with separate control of space heating and DHW heating....46
4.17 Applicable Backflow Preventer....48
4.18 Hydronic Accessories & Water side Press Drop..48
4.19 Boiler pump (P1) for primary/secondary piping....49
4.20 Pressure Relief Valve....50
4.21 Disposal of Condensate....51
4.22 Electrical Wiring Connections....52
4.23 DIP Switches....53
4.24 Control Board, Electrical Diagram....54
4.25 Ladder Diagram....55
4.26 Electrical Connections (table)....56

SECTION 5 Control Display and Operation....58
5.1 Control Dial and Buttons....58
5.2 LCD Overview....59
5.3 Operating Mode....60
5.4 Setting the Clock....61
5.5 CH Set Point Change Mode....62
5.6 Status Display Mode....63
5.7 Installer Mode....64
5.8 DHW Indirect Storage Mode....68
5.9 Outdoor Reset Adjustment....69
5.10 External Set Point Temperature Control....69
5.11 Error Mode....70

SECTION 6 Error Codes....71
6.1 Error Code Tables....71
6.2 Fault Tree Analysis....74
6.3 Fault Tree Analysis (cont)....75

SECTION 7 Trouble Shooting....76
7.1 Diagnostics....76
7.2 Suggested Corrective Actions....77

SECTION 8 Maintenance....79
8.1 Annual startup & general maintenance....79
8.1.1 Regular Maintenance....79
8.1.2 Maintenance procedures [Daily]....79
8.1.3 Maintenance procedures [Monthly]....79
8.1.4 Maintenance procedures [Every 6 Months]....80

SECTION 9 Installation Check....80
9.1 Quick View....80
9.2 Final Check Lists....81
9.3 Freeze Protection....82

SECTION 10 Parts....84-92

SECTION 1 Introduction

1.1 About this Installation Manual

For details on Combustion Air and Venting, (pages 17-29)

This manual provides the information necessary for the installation, operation, and maintenance of the FT 301/399 Wall or Floor Heating Only Boiler.

All application and installation procedures must be read and reviewed completely before proceeding with the installation. Consult the factory, or your local factory representative, with any problems or questions regarding this equipment. Experience has shown that most operating problems are caused by improper installation.

For details on Plumbing for Central Heat (see page 40 to page 51)

For details on Gas Connections/Combustion Setup (see page 30 to page 36)

All installations must be made in accordance with
1) American National Standard Z223.1/ NFPA54-Latest Edition “National Fuel Gas Code” or
2) CSA B149.1 “Natural Gas and Propane Installation Code” and with the requirement of the local utility or other authorities having jurisdiction. Such applicable requirements take precedence over the general instructions contained herein.

For details on Plumbing for Condensate, (see page 51)

All electrical wiring is to be done in accordance with the local codes, or in the absence of local codes, with: 1) The National Electrical Code ANSI/NFPA No. 70-latest Edition, or 2) CSA STD. C22.1 “Canadian Electrical Code - Part 1”. This appliance must be electrically grounded in accordance with these codes.

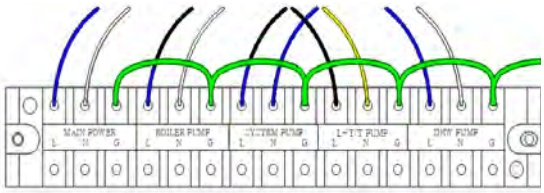

Hi Voltage Terminals

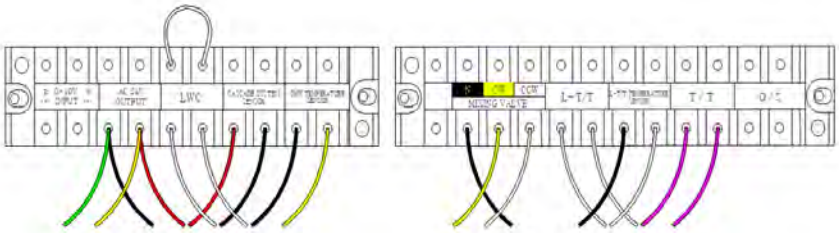

Low Voltage Terminals

For details on Field Connections and Electrical Diagrams (see page 40 to page 56)

1.2 Included in the Box

Item	Description
Wall Mounted Heating Only **Boiler**	
Package, Outdoor Sensor and Silicone tubing for air relief on condensate trap, velcro strap and condensate hose	
Box, 30 psi Relief Valve	
Box, Air Vent	
Box, Brass Adaptor	
Package, Two ¾” plugs. and Two 1-1/2” caps)	

Item	Description
Documents Package (I/O manual and warranty)	
Package, Two Mesh Screens 3” Dia.	
Propane Conversion Kit with Orifice and Instructions	
Packages, Spare Parts. O-Rings and Gaskets	
Condensate Trap	
Wall Hanging **Bracket and Isolation Pad**	

SECTION 2 Product Characteristics

2.1 Model Number

The Model Number is shown on your Rating Plate and consists of a series of letters and numbers **(Nomenclature)** that further identifies the characteristics of your FTHW Heating Only Boiler.

Model Number / Rating Plate

1	2	3	4	5	6	7	8	9	10
	F	T	H	W				N	

	SERIES			SIZE MBTU/h	FUEL	OPTIONS
L/B	FT	H - HEATING ONLY	W - WALL MOUNTED	301 399	N - NATURAL	X - BOILER ONLY F - BOILER WITH FLOOR STAND

2.2 Dimensions for FTHW301 and FTHW399 models

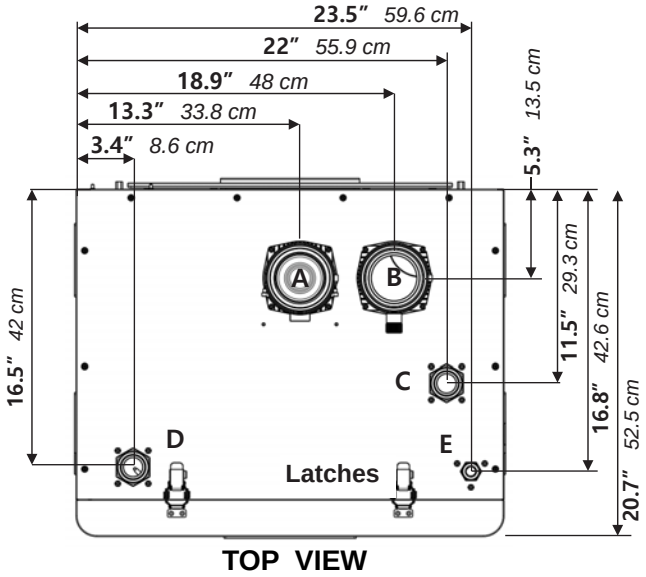

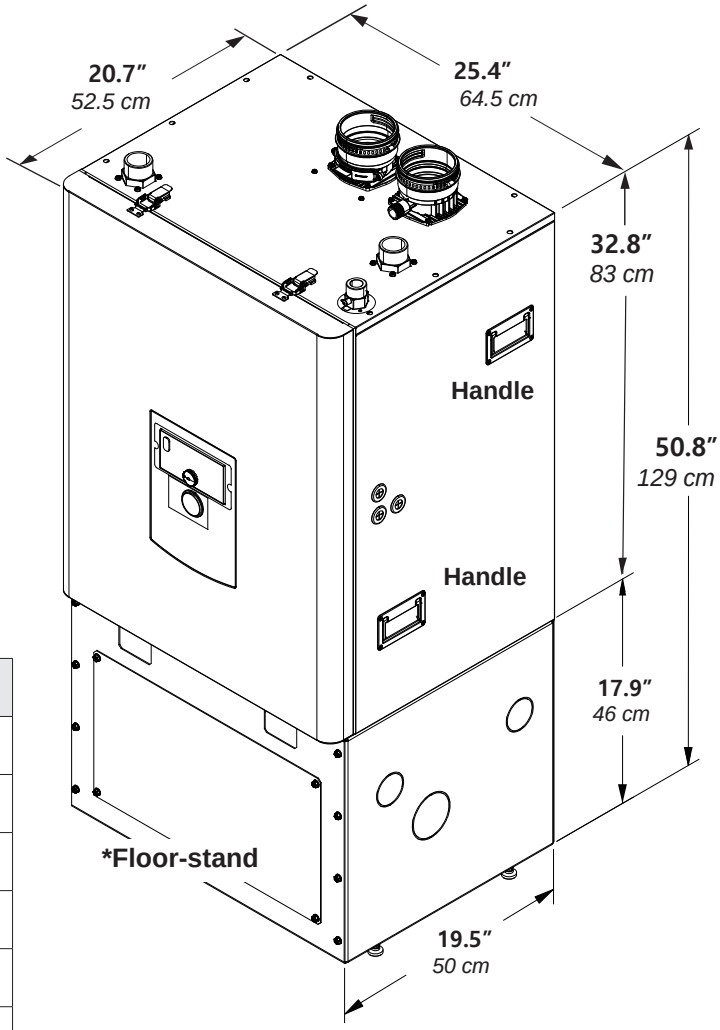

	Description	Diameter
A	Air Intake Collar	3"(*)
B	Vent Pipe Collar	3"(*)
C	Boiler Supply	1-1/2" NPT
D	Boiler Return	1-1/2" NPT
E	Gas Inlet	1" NPT
F	Condensate Line	1/2" (no NPT)
G	PRV & Air Vent	3/4" NPT and 1/2" NPT

***Floor stand is available separately or ordered with the boiler.**

2.3 Specifications

2.3.1 Specifications, 301

Model Name		FTHW301NX			
Gas Input Rate	MAX	301,000 Btu/h			
	MIN	39,900 Btu/h			
Installation		Indoor / Wall-mounted or floor (requires floor stand) boiler			
Flue System		Sealed Combustion Direct / Single Vent / Concentric Vent			
Vent Run		3”(65 ft), 4” (150 ft) Schedule 40 CPVC, PP, PVC, Stainless Steel, PP Flex			
Orifice Size	NG	6.55 mm (0.258”)			
	LP	5.40 mm (0.216”)			
Gas Supply Pressure	NG	3.5″ WC to 10.5″ WC			
	LP	8.0″ WC to 13″ WC			
Manifold	Gas type	NG		LP	
	Vent size	3″ VENT	4” VENT	3″ VENT	4″ VENT
	Max Fire	-0.28 “WC	-0.28 “WC	-0.28 “WC	-0.28 “WC
	Min Fire	-0.015 “WC	-0.015 “WC	-0.015 “WC	-0.015 “WC
Power Supply	Main Supply	120V 60Hz / 15A			
	Maximum Power Consumption	160W			
Ignition System		Direct Electronic Ignition / Automatic Flame Sensing			
Burner System		Single Orifice Premixed Fuel Modulation			
Minimum Flow Rate		5 GPM			
Dimensions		W 25.4” - H 32.7” - D 20.7”			
Shipping Weight		250 lbs (113 kg)			
Water Capacity		11.3 Gallons / 90 lbs (41 kg)			
Main Controller / Control Panel		NGTB-1000C / P-953EH			
Central Heat Water Pressure, CH		Min 15 ~ Max 80 PSI			
Connection Sizes (top and bottom)	Space Heating Supply / Return	1-1/2″ NPT			
	Gas Inlet	1″ NPT			
Materials	Casing	Cold Rolled Carbon Steel			
	Heat Exchanger	Primary Heat Exchanger : Stainless Steel			
Safety Devices		Flame rod, Overheat Cut Off Device, Gas Valve Operation Detector, Exhaust Temperature High Limit Switch, Water Temperature High Limit Switch, Low Water Cut Off, Air Pressure Sensor			

2.3.2 Specifications, 399

Model Name		FTHW399NX			
Gas Input Rate	MAX	399,000 Btu/h			
	MIN	39,900 Btu/h			
Installation		Indoor / wall-mounted or Floor (requires floor stand)			
Flue System		Sealed Combustion Direct / Single Vent / Concentric Vent			
Vent Run		3”(65 ft), 4” (150 ft) Schedule 40 CPVC, PP, PVC, Stainless Steel, PP Flex			
Orifice Size	NG	6.70 mm (0.264”)			
	LP	5.40 mm (0.216”)			
Gas Supply Pressure	NG	3.5˝ WC to 10.5˝ WC			
	LP	8.0˝ WC to 13˝ WC			
Manifold	Gas type	NG		LP	
	Vent size	3˝ VENT	4” VENT	3˝ VENT	4˝ VENT
	Max Fire	-0.48” WC	-0.48” WC	-0.48” WC	-0.48” WC
	Min Fire	-0.015” WC	-0.015” WC	-0.015” WC	-0.015” WC
Power Supply	Main Supply	120V 60Hz / 15A			
	Maximum Power Consumption	160W			
Ignition System		Direct Electronic Ignition / Automatic Flame Sensing			
Burner System		Single Orifice Premixed Fuel Modulation			
Minimum Flow Rate		5 GPM			
Dimensions		W 25.4” - H 32.7” - D 20.7”			
Shipping Weight		260 lbs (118 kg)			
Water Capacity		10 Gallons / 80 lbs (36 kg)			
Main Controller / Control Panel		NGTB-1000C / P-953EH			
Central Heat Water Pressure, CH		Min 15 ~ Max 80 PSI			
Connection Sizes (top and bottom)	Space Heating Supply / Return	1-1/2˝ NPT			
	Gas Inlet	1˝ NPT			
Materials	Casing	Cold Rolled Carbon Steel			
	Heat Exchanger	Primary Heat Exchanger : Stainless Steel			
Safety Devices		Flame rod, Overheat Cut Off Device, Gas Valve Operation Detector, Exhaust Temperature High Limit Switch, Water Temperature High Limit Switch, Low Water Cut Off, Air Pressure Sensor			

2.4 Names of Components

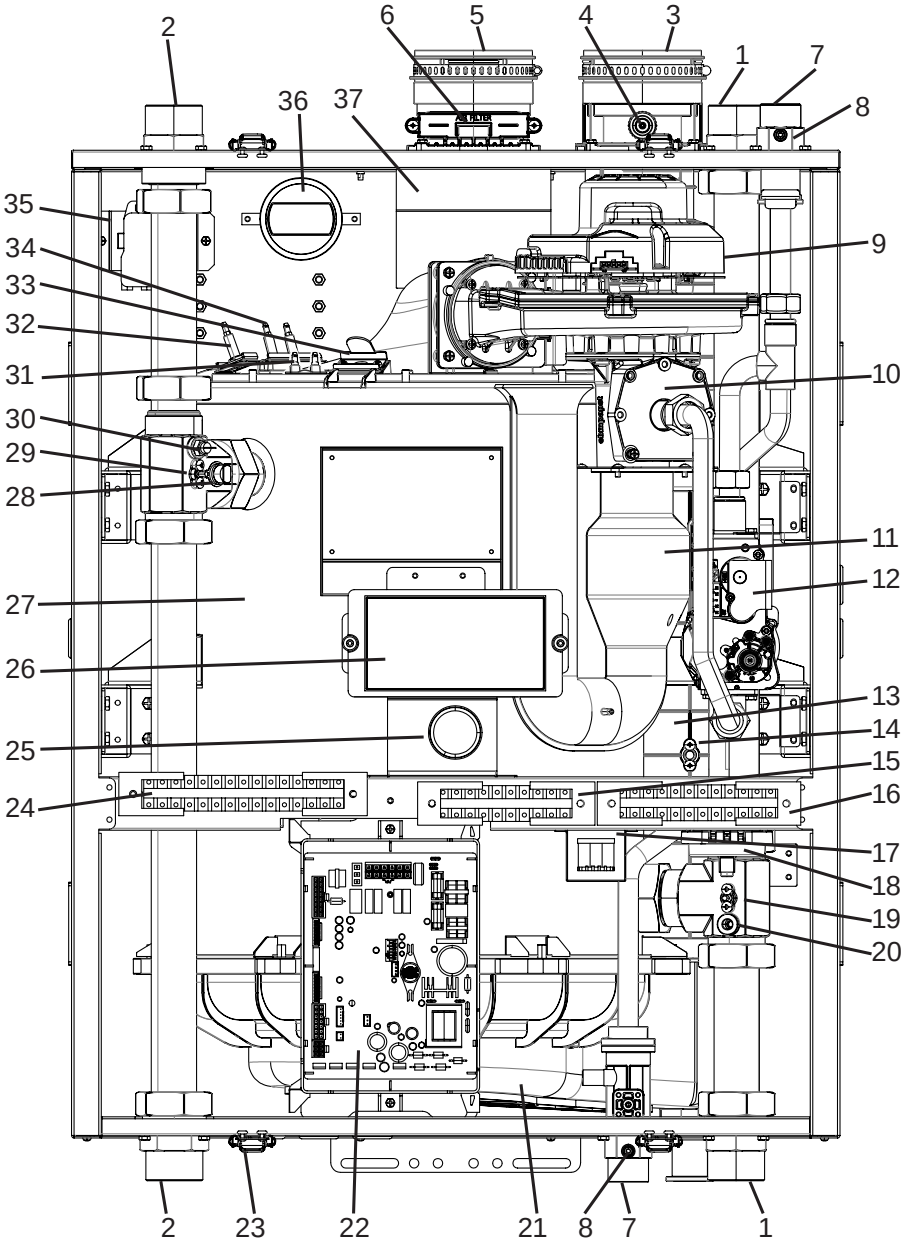

Item #	Description
1	Boiler Return Connection
2	Boiler Supply Connection
3	Vent Pipe Collar
4	Combustion Test Port
5	Air Intake Collar
6	Air Intake Screen
7	Gas Inlet Connector
8	Supply Gas Pressure Test Port
9	Blower
10	Air/Gas Venturi
11	Air Intake Attenuator
12	Gas Valve
13	Internal Exhaust Pipe
14	Sensor, Flue Gas Temperature
15	Low Voltage Terminal
16	Low Voltage Terminal
17	24V Transformer
18	Air Pressure Switch
19	Sensor, Return Water Temperature
20	Pressure Gauge Probe
21	Condensate Pan
22	Main PCB (NGTB-1000C)
23	Front Door Latches (4)
24	120V Terminal Block
25	Pressure Gauge
26	Control Panel and Display
27	Heat Exchanger
28	Sensor, Overheat Shut-Off Switch
29	Sensor, Supply Water Temperature
30	Sensor, Low Water Cut-Off (LWCO)
31	Thermal Fuse
32	Sensor, Flame Detecting
33	Sight Glass
34	Igniter
35	Ignition Transformer
36	Sensor, CO2 Flue Gas Recirculation
37	Air Intake Deflector

2.5 Product Flow Paths and Characteristics

2.5.1 Central Heating flow. Boiler Heating Mode.

This boiler has top and bottom return and supply water connections. Place the combo brass adaptor fitting on the upper left supply connection. Use at least one of the CH return and CH supply connections. Cap off any other connections using the 2 1-1/2" caps provided.

Note that the boiler has top and bottom gas connections. Each unit come from a factory with the capped top connection. If the top gas connection is desired, remove its cap using a 2 wrench method and install it on the bottom gas connection (lower right).

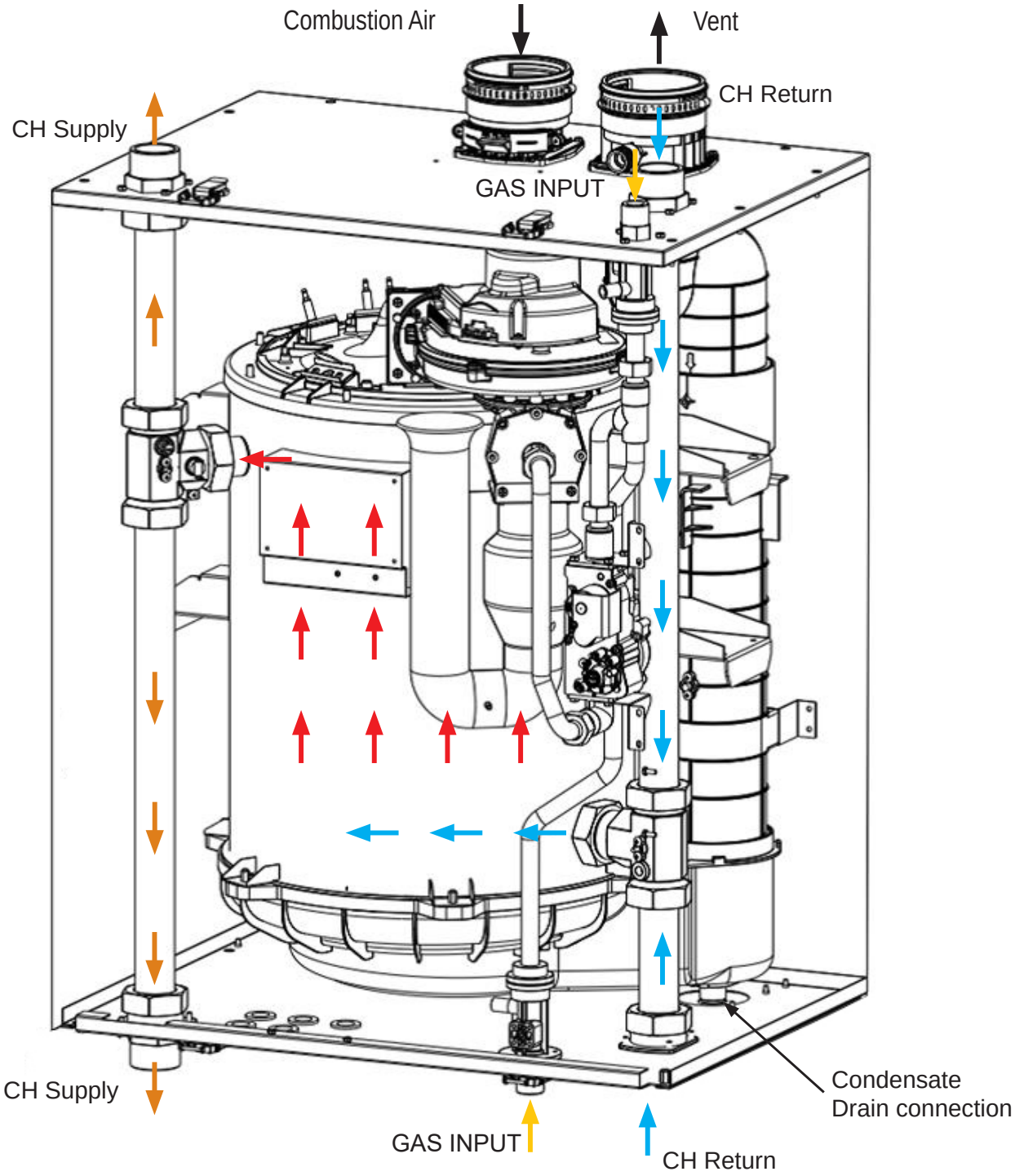

SECTION 3 Safety Regulations

3.1 Safety Symbols

⚠ WARNING

To avoid product damage, personal injury, or even possible death, carefully read, understand, and follow all the instructions in the Installation and Operation manual before installation, operation and service the Boiler.

Manufacturer cannot anticipate every circumstance that might involve a potential hazard. Therefore, all possible incidents are not included in our warnings. Proper installation, operation, and service are your responsibility. You must make sure that the operation and settings of the Boiler are safe for you and for others.

This manual provides Safety Symbols. When the user fails to adhere to the following requirement, it may cause death, serious injury, and substantial property damage.

For safety symbols, 'DANGER', 'WARNING', CAUTION' are indicated and the definitions for these terms are as follow:

⚠ DANGER

Indicates an imminently hazardous situation which, if not avoided, will result in death or serious injury. This signal word is limited to the most extreme situations.

⚠ WARNING

Indicates a potentially hazardous situation which, if not avoided, could result in death or serious injury.

⚠ CAUTION

Indicates a potentially hazardous situation which, if not avoided, may result in minor or moderate injury. It is also used to alert against unsafe practices and hazards involving only property damage.

⚠ WARNING

Cancer and Reproductive Harm.
www.P65WARNINGS.CA.GOV.

as required by the state of California Proposition 65.

⚠ WARNING

FOR YOUR SAFETY READ BEFORE OPERATING

If you do not follow these instructions exactly, a fire or explosion could result causing property damage, personal injury or loss of life.

A. This appliance does not have a pilot. It is equipped with an ignition device which automatically lights the burner. Do not try to light the burner by hand.

B. BEFORE OPERATING smell all around the appliance area for gas. Be sure to smell next to the floor because some gas is heavier than air and will settle on the floor.

WHAT TO DO IF YOU SMELL GAS

- Do not try to light any appliance.
- Do not touch any electric switch; do not use any phone in your building.
- Immediately call your gas supplier from a neighbor's phone. Follow the gas supplier's instructions.
- If you cannot reach your gas supplier, call the fire department.

C. Use only your hand to push in or turn the gas control knob. Never use tools. If the knob will not push in or turn by hand, don't try to repair it, call a qualified service technician. Force or attempted repair may result in a fire or explosion.

D. Do not use this appliance if any part has been under water. Immediately call a qualified service technician to inspect the appliance and to replace any part of the control system and any gas control which has been under water.

This appliance must be installed in accordance with local codes if any; if not, follow ANSI Z223.1/NFPA 54 or CAN/CSA B149.1, Natural Gas and Propane Installation Code, as applicable.

■ This appliance is certified for use at altitudes up to 10,000 ft (3,150 m) in accordance to the latest CSA 2.17 Gas-Fired Appliances for Use at High Altitudes.

3.2 Safety Precautions and Proper Use

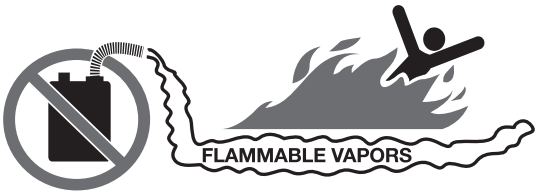

⚠ DANGER

- Vapors from flammable liquids will explode and catch on fire. These will cause death or severe burns.

Do not use or store flammable products such as gasoline, solvents or adhesives in the same room or area near the appliance.

Keep flammable products

- Far away from boiler
- In approved containers
- Tightly closed
- Out of children's reach

Vapors

- Cannot be seen
- Are heavier than air
- Spread on the floor
- Can spread from other rooms to the main burner by air currents

Do not install the appliance where flammable products will be stored.
Read and follow boiler warnings and instructions thoroughly. If owner's manual is missing, contact the retailer or manufacturer.

- This boiler must be installed by a qualified plumber, a licensed gas fitter, and/or a professional service technician. Improper installation and/or operation will cause a potentially hazardous situation, such as serious injury or death. Also, it will void the warranty.
  - The National Fuel Gas Code NFPA 54 / ANSI Z223.1
  - National Electric Code ANSI/NEPA 70
  - All applicable local, state, national and provincial codes, regulations and laws.

- Proper care is your responsibility. Carefully read and understand the Operating Information in this manual before operating the Boiler.

- Be aware of the location of the gas shut-off valve and operation method. Close the gas shut-off valve immediately if the appliance is subjected to fire, overheating, flood, physical damage, or any other damaging condition that might affect the operation of the unit. Boiler must be checked by a qualified technician before resuming operation.

- DO NOT use this Boiler if any part has been under water. Immediately call a qualified technician for inspecting the Boiler and replacing any part of the control system and gas control which have been under water.

- Do not power up the unit until the gas and water supply valves are fully opened. Make sure that the fresh air intake port and exhaust gas port are opened and functional.

- DO NOT attempt to install, repair, or service this Boiler by yourself.
  Do not change any part of the Boiler.
  Contact a qualified technician if the Boiler needs repair or maintenance.
  Ask your gas supplier for a list of qualified service providers.

- DO NOT use spray paint, hair spray, or any other flammable spray near Boiler or near the exterior fresh air inlet port. DO NOT place any items in or around the exterior exhaust gas outlet port and/or fresh air inlet port. These could restrict or block the flow in or out of the vent system.

- Caution: While repairing control, all wires are labelled. You must connect the wires in accordance with the instruction.
  Wiring errors can cause improper and dangerous operation.

- Verify proper operation after servicing operation

- This consists of the gas ignition system components which are protected from water (dripping, spraying, rain, etc.) during operation and service (circulator replacement, condensate trap, control replacement, etc.).

- After installing the heater, safety devices must be tested.

- This boiler is equipped with a blocked vent shutoff system. If the error code '44' occurs, follow the instructions below.

  - First, turn off the manual gas valve.
  - Make sure that there is no foreign object in the vent passage or rodent screen.
  - If you do not find any problem, do the following.
  - Turn off the error state by pressing the power button of control panel.
  - If the error occurs repeatedly, call your service technician or gas supplier.

Before Operation

Note: FTHW301/399 is factory built for Natural Gas. For use with LP(Propane), refer to Section 4.15 Natural Gas to Propane Conversion.

1. Check the Gas Type (NG/LP) when using or moving the unit for the first time. Check if gas type matches with the gas type of the boiler. Check whether the gas type which is supplied is NG (Natural Gas) or LP (Propane) and also check the boiler gas type. The gas type is indicated on the rating plate on side of the Boiler.

2. Check the Power (120V 60Hz). Check that the appliance is connected properly.

3. Check the Cold Water Feed valve. Please keep the appliance water inlet valve open at all times. The appliance will not ignite when insufficient water or no water is in the heating pipes. (valve: always open position) Minimum System Pressure: 15 psig(105 kPa)

4. Check the manual gas shut-off valve on top or below of the FT boiler gas connection. Make sure this manual gas shut-off valve is opened for operation.

5. Check the area around the appliance and remove any combustible or flammable materials. Remove laundry or any other items that are on or near the boiler or vent pipe.

When in Operation ⚠ CAUTION

1. Caution for gas leak
Frequently check for a gas leak at the gas connection portion with soapy water.

Steps to take if you have a gas leak.
1. Shut down the boiler as soon as gas fumes are detected.
2. Close the manual gas shut-off valve.
3. Open windows for ventilation.
4. Do not create any sparks! Leave the property immediately and call your local utility or qualified service technician for immediate repair.

2. Caution for Ventilation
Make sure that there is sufficient inflow and outflow of air ventilation while using the unit.
If the ventilation is improper, combustion quality may deteriorate inside the appliance and cause shortened life of the appliance.

⚠ WARNING

Do not use the appliance for any other purpose than for space heating and DHW heating using an indirect water heater tank.
Do not store combustibles or flammable material such as gasoline near the appliance.
Do not store other items on or near this boiler.
Do not store combustible (flammable) materials such as papers.
Do not hang clothes on the vent pipe. This may start a fire.

3. Burn Warning
Be careful not to burn yourself on the flue or pipes. They become extremely hot during operation.

⚠ CAUTION

Scalding Risk: Manufacturer strongly recommends the use of an anti-scald mixing valve at domestic hot water outlet (indirect tank location) to reduce potential for scalding. Check with local codes.

Carbon monoxide poisoning
If vent pipe fumes enter the room, it could cause poisoning by carbon monoxide gas. Check that the vent pipes are properly connected. Open windows for ventilation. Call a qualified service technician for immediate repair.

Gas leakage test.
Gas supply line must be inspected regularly.

Do not shut off the Boiler.
When you leave home for a long time, do not shut off Boiler. The Boiler has a freeze protection function.

Do not wipe the appliance or control panel with wet cloth. Electric shock may occur, or internal parts may fail due to the exposure to moisture.

Do not disassemble the Boiler.
If repair is required, call your local qualified technician.

⚠ **CAUTION**

After repair of gas pipeline or gas regulator replacement, call a qualified contractor for inspection before starting it up.

SECTION 4 Installation

NOTE: For Cascading Installations, please refer to document 'Cascading the FTHW301/399 Series Boiler', available online.

4.1 Location and Clearances (wall)

The FT must be mounted to a suitable wall by a qualified heating contractor under the guidelines of a boiler. The wall may be of concrete or wood. Suitable fasteners for concrete or wood must be used. Failure to wall mount this boiler using correct fasteners will affect the performance and life expectancy of the boiler and will void the warranty.

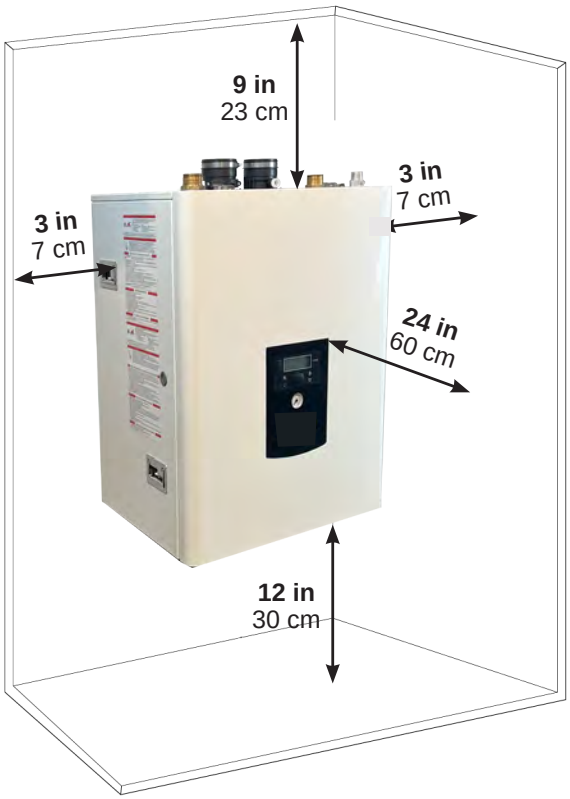

Minimum clearances to combustibles.

For Installation from Non-Combustibles and Combustibles		Suggested Service Clearance
TOP of appliance (alcove installation)	9 in (23 cm)	24 in (61 cm)
BACK of appliance	1 in (2.5 cm)	1 in (2.5 cm)
TOP (Closet Install)	22 in (56 cm)	22 in (56 cm)
FRONT of appliance	1 in (2.5 cm)	18 in (46 cm)
SIDE of appliance	1 in (2.5 cm)	6 in (15 cm)
BOTTOM of appliance	12 in (30 cm)	24 in (61 cm)

Table 1. Minimum Clearances to combustibles, when mounted on wall.

⚠ WARNING

- Installations must comply with
  - All the local, state, provincial, and national codes, laws, regulations and ordinances.
  - National Fuel Gas Code, ANSIz223.1 - The latest version.
  - National Electrical Code.
  - A National Standard of Canada CAN/CSA-B149.1
- Check before placing the Boiler
  - Always check the connected components which are near to the heater. The components are below.
- Waterpiping position / Venting adapter / Gas supply piping / Electrical power / Condensate drain hose.
  - Inspect area around Boiler. Remove any combustible materials, gasoline and other flammable liquids. Failure to keep Boiler area clear and free of combustible materials, gasoline and other flammable liquids and vapors can result in severe personal injury, death or substantial property damage.
  - The Boiler which has gas control system components must be protected from any possible danger during operation and service.
  - If new Boiler replaces an existing appliance, check and correct system problems, for example:
  - Do not install if: System leaks causing oxygen corrosion or heat exchanger cracks from hard water deposits.
- Provide clearances
  - If the boiler was installed in a narrow space or corner, please ensure that there is sufficient space for service and maintenance access. For regular maintenance, gas and water lines must be accessible.
- This boiler must be installed upright in the vertical position as described in this manual.

⚠ WARNING

- CLEARANCES FOR SERVICE ACCESS
  - If you do not provide the minimum clearances shown, it might not be possible to service the boiler without removing it from the space.
  - Space must be provided with combustion / ventilation air openings correctly sized for all other appliances located in the same space as the boiler. The boiler cover must be securely fastened to prevent it from drawing air from the boiler room. This is particularly important if the boiler is in a room with other appliances. Failure to comply with the above warnings could result in substantial property damage, severe personal injury, or death.

4.1.1 Wall Mount Bracket

4.1.2 Mounting Location Preparation

The installation height and location for your FT depends on your installation scenario. With all clearances considered, and given adequate positioning for air supply and venting, you will need to determine the best position to mount the Wall Mount Bracket. The wall must be concrete, wood, or plywood over studs, and must be strong enough to hold the boiler!

Mounting on framed structure
(Field supply fasteners)

• Start by familiarizing yourself with how the included Wall Mount Bracket hooks underneath the protruding engaging edge on the back of the boiler.

Make sure that all mounting bolts are engaged at least 3” to 4” into the wall studs. If the position of the wall studs can not be found, use 2 pieces of 6 ft 2x6 lumber centered on the 16” spaced wall studs and secure both pieces of lumber with 2 4” long 3/8” wood screws into each stud. The boiler wall bracket is then mounted on the top 2x6 piece.

Position the Wall Mount Bracket at the location that it will go, make sure that it is level, and then drill 4 holes (0.47” dia) with a 1/2” drill bit, into the wall through the Bracket.

Mounting on concrete wall

If mounting to a concrete wall, use concrete anchors. If the included anchors do not suit your installation, you must use field supplied anchors that are appropriate for the wall’s construction.

4.1.3 Hang the Boiler

• Remove the front door of the boiler.

• Lift the boiler up with at least 2 people, align the Hangers on the back of the boiler with the knife edge of the Wall Mount Bracket, and hang the boiler onto the Wall Mount Bracket. Do a visual inspection to make sure that the boiler is hanging properly onto the knife edge of the Wall Mount Bracket.

• Fasten the bottom of the boiler to the wall using 2 suitable wall anchors (field supplied).

4.2 Location and Clearances for Boiler with Optional Floor Stand (Part #: 4AC1000)

The boiler must be installed on a level surface of sufficient strength and follow the clearances listed in Table 2. Leveling feet are provided with the floor stand kit to ensure a plumb installation.

Refer to the Floor Stand Kit instructions to attach the optional Floor Stand to the bottom of the boiler.

***Note:** Floor stand is 18" tall and bolts directly to the bottom of the boiler.

Appliance Surface	Clearance from Combustibles and Non-combustible Surfaces
Back	1 in (2.5 cm)
Left Side	1 in (2.5 cm)
Right Side	1 in (2.5 cm)
Front	1 in (2.5 cm)
Top (Alcove Install)	9 in (22.86 cm)
Top (Closet Install)*	22 in (56 cm)
Vent : Category IV	3 in (76 cm)
Suggested Serviceability Clearances	
Front	18 in (46 cm)
Left Side	6 in (15 cm)
Right Side	6 in (15 cm)
Top	24 in (61 cm)

Table 2. Minimum Clearances to combustibles, using Optional Stand.

⚠ WARNING

- Installations must comply with
  - All the local, state, provincial, and national codes, laws, regulations and ordinances.
  - National Fuel Gas Code, ANSI Z223.1 – The latest version.
  - National Electrical Code.
  - A National Standard of Canada CAN/CSA-B149.1
- Check before placing the boiler
  - Always check the connected components which are near to the boiler. The components are below.
- Water piping position / Venting adapter / Gas supply piping / Electrical power / Condensate drain hose.
  - Inspect area around boiler. Remove any combustible materials, gasoline and other flammable liquids. Failure to keep boiler area clear and free of combustible materials, gasoline and other flammable liquids and vapors can result in severe personal injury, death or substantial property damage.
  - The boiler which has gas control system components must be protected from any possible danger during operation and service.
  - If the new boiler replaces an existing appliance, check and correct system problems, for example:
  - Do not install if: System leaks causing oxygen corrosion or heat exchanger cracks from hard water deposits.
- Provide clearances
  - If the boiler was installed in a narrow space or corner, please ensure that there is sufficient space for service and maintenance access. For regular maintenance, gas and water lines must be accessible.
- This boiler must be installed upright in the vertical position as described in this manual.

⚠ WARNING

- CLEARANCES FOR SERVICE ACCESS
  - If you do not provide the minimum clearances shown, it might not be possible to service the boiler without removing it from the space.
  - Space must be provided with combustion / ventilation air openings correctly sized for all other appliances located in the same space as the boiler. The boiler cover must be securely fastened to prevent it from drawing air from the boiler room. This is particularly important if the boiler is in a room with other appliances. Failure to comply with the above warnings could result in substantial property damage, severe personal injury, or death.

4.2.1 Flooring & Leveling : Installing the FTHW301/399 on the floor.

⚠ WARNING

Make sure that the floor and structure of the installation location are sufficient to support the full installed weight of the boiler, including water content of the heat exchanger and related piping. Failure to ensure the floor and structure of the installation location are structurally sound before installation of the boiler can result in structural failure, substantial property damage, severe personal injury, or death.

This boiler is approved for installation on combustible flooring, but must never be installed on carpeting. Installing this boiler on carpeting could result in fire, property damage, severe personal injury, or death.

⚠ CAUTION

In order for the condensate to properly flow out of the collection system, the area where you locate the boiler must be level. Location must also fully support the weight of the filled boiler.

CORRECT

INCORRECT

Boiler levelling feet are factory supplied with the optional floor stand.

* If small adjustments are required, tilt the boiler either to the left or right side and adjust the proper levelling feet.

ALWAYS use 2 people to adjust the levelling feet due to the weight of the boiler.

Note: When moving the boiler, grab the hand-holds provided on the left and right side of the boiler and gently move the boiler to its desired location. Do not slide boiler along the floor on its boiler feet, as this may damage the feet. Rather, “walk” the boiler to its designated location by carefully rocking the boiler from left to right.

4.3 Combustion Air

FTHW 301/399 boilers must have provisions for combustion and ventilation air in accordance with the applicable requirements for Combustion Air Supply and Ventilation in the National Fuel Gas Code, ANSI Z223 1; or in Canada, the Natural Gas and Propane Installation Code, CSA B149.1. All applicable provisions of local building codes must also be adhered to.

A FTHW 301/399 unit can take combustion air from the space in which it is installed, or the combustion air can be ducted directly to the unit. Ventilation air must be provided in either case.

4.3.1 Combustion Air from Room

In the United States, the most common requirements specify that the space shall communicate with the outdoors in accordance with method 1 or 2, which follow. Where ducts are used, they shall be of the same cross-sectional area as the free area of the openings to which they connect.

Method 1: Two permanent openings, one commencing within 12” (300mm) of the top and one commencing within 12” (300mm) of the bottom, of the enclosure shall be provided. The openings shall communicate directly, or by ducts, with the outdoors or spaces that freely communicate with the outdoors. When directly communicating with the outdoors, or when communicating to the outdoors through vertical ducts, each opening shall have a minimum free area of 1 square inch per 4000 Btu/hr (550 square mm/kW) of total input rating of all equipment in the enclosure. When communicating to the outdoors through horizontal ducts, each opening shall have a minimum free area of not less than 1 square inch per 2000 Btu/hr (1100 square mm/kW) of total input rating of all equipment in the enclosure.

Method 2: One permanent opening, commencing within 12” (300mm) of the top of the enclosure, shall be permitted. The opening shall directly communicate with the outdoors or shall communicate through a vertical or horizontal duct to the outdoors or spaces that directly communicate with the outdoors and shall have a minimum free area of 1 square inch per 3000 Btu/hr (734 square mm/kW) of the total input rating of all equipment located in the enclosure. This opening must not be less than the sum of the areas of all vent connectors in the confined space.

Other methods of introducing combustion and ventilation air are acceptable, providing they conform to the requirements in the applicable codes listed above.

In Canada, consult local building and safety codes or, in absence of such requirements, follow CSA B149.1

4.3.2 Ducted Combustion Air

The combustion air can be taken through the wall, or through the roof. When taken from the wall, it must be taken from out-of-doors by means of the horizontal wall terminal. When taken from the roof, a field-supplied rain cap or an elbow arrangement must be used to prevent entry of rain water.

Use ABS, PVC, CPVC, polypropylene, or galvanized pipe for the combustion air intake. Route the intake to the boiler as directly as possible. Seal all joints. Provide adequate hangers at every 4 foot interval and at every elbow for proper support. The unit must not support the weight of the combustion air intake pipe. Maximum linear pipe length allowed is shown in Table 64. (See page 24). Subtract the required deduction in length for each installed elbow as per Table 4.

The connection for the intake air pipe is at the top of the unit.

In addition to air needed for combustion, air shall also be supplied for ventilation, including air required for comfort and proper working conditions for personnel.

COMBUSTION AIR INSTALLATION STANDARDS		
MATERIAL	UNITED STATES	CANADA
ABS	ANSI/ASTM D1527	Air pipe material must be chosen CPVC, sch 40, ANSI/ASTM, Polypropylene based upon the intended application of the boiler.
PVC, SCH 40	ANSI/ASTM D1785 or D2665	
CPVC, SCH 40	ANSI/ASTM F441	
Polypropylene	UL1738, ULC S636	
Single wall galv. steel	26 gauge	

Table 3. Required Combustion Air Pipe Material.

⚠ NOTICE

The instructions for the installation of the venting system shall specify that the horizontal portions of the venting system shall be supported to prevent sagging; the methods of and intervals for support shall be specified. These instructions shall also specify that the venting system:

Category I, II and IV boilers must be installed so that horizontal sections have an upward slope away from the boiler of at least ¼ inch per foot (21 mm/m) to prevent accumulation of condensate; and
For Category II and IV boilers, where necessary, have means provided for drainage of condensate.

⚠ NOTICE

For long, trouble free operation, it is critical that the FT unit has always access to clean combustion air, either drawn from an inside space (per section 4.5.1) or external (per section 4.5.2).

- Do NOT allow contaminated indoor air (either by internal dust, sheet rock, PVC or CPVC pipe debris dust or similar contamination) to be drawn in through the air intake connection. If the unit must operate under job site conditions, always ensure availability of fresh air and protect the unit accordingly.
- For ducted combustion air from the outdoors, follow the guidelines provided in Sections 4.5 through 4.8 and make sure that clean air is always available for combustion.
- During assembly of the air intake system, make sure that any PVC or CPVC pipe debris due to cutting pipe is fully removed and all connecting surfaces are smooth and free of contamination.
- Visually inspect air intake piping for interior debris or shavings. It may be necessary to wash out the air intake piping.

⚠ CAUTION

When an existing Cat I appliance is removed or replaced, the original venting system may no longer be sized to properly vent the attached appliances. Under no circumstances should an improperly sized vent be used. An improperly sized vent may cause operational and safety problems, and could result in serious injury, death, or property damage.

⚠ AVIS

Les instructions d'installation du système d'évacuation doivent préciser que les sections horizontales doivent être supportées pour prévenir le fléchissement. Les méthodes et les intervalles de support doivent être spécifiés. Les instructions doivent aussi indiquer les renseignements suivants:

les chaudières de catégories I, II et IV doivent présenter des tronçons horizontaux dont la pente montante est d'au moins ¼ po par pied (21 mm/m) entre la chaudière et l'évent; les chaudières de catégories II et IV doivent être installées de façon à empêcher l'accumulation de condensat;

et si nécessaire, les chaudières de catégories II et IV doivent être pourvues de dispositifs d'évacuation du condensat.

⚠ CAUTION

- The FT is standard as a Natural Gas Boiler and must be converted if propane is the desired gas, using the furnished LP conversion kit.

- Adequate drainage
  - The appliance should be installed not to damage the adjacent area. If such locations cannot be avoided, it is recommended that a suitable drain pan, adequately drained, be installed under the appliance. The pan must not block combustion air flow.

- Connecting the Water Supply
  - To conserve water and energy, insulate all water piping—especially the hot and recirculation water lines. Never cover the drain or pressure relief valve. Having a backflow preventer in the cold water supply line will prevent thermal expansion backflow. Contact the water supplier or local plumbing inspector for information about how to control this situation.

- If overheating occurs or the gas supply fails to shut off, turn off the manual gas valve.

- This installation must conform with below section
  - “Air for Combustion and Ventilation” of the National Fuel Gas Code, ANSI Z223.1/NFPA 54, or In Canada, the Natural Gas and Propane Installation Code, CAN/CSA B149.1, or applicable provisions of the local building codes.

4.4 Venting (Exhaust)

⚠ NOTICE

DO NOT COMMON VENT FT UNITS WITH OTHER MAKES OF BOILERS. FT units are never permitted to share a vent with Category I appliances.

⚠ AVIS

NE PAS ÉVENT COMMUNE FT UNITÉS. FT unités ne sont jamais autorisés à partager un évent Catégorie I avec les appareils.

The flue temperature of the FT changes dramatically with changes in operating water temperature. Therefore, it is necessary to assess the application of the boiler to determine the required certified vent material. If the FT is installed in an application where the ambient temperature is elevated, and/or installed in a closet/alcove, CPVC, polypropylene, or stainless steel material is required. If the system temperatures are unknown at the time of installation, stainless, polypropylene or CPVC material is recommended.

The FT is a Category IV appliance and may be installed with PVC, CPVC or polypropylene (PP) and PP Flex that complies with ULC-S636, ANSI/ASTM D1785 F441 (see Table 42) or a stainless steel venting system that complies with UL 1738 Standard and ULC S636.

⚠ WARNING

Failure to use the appropriate vent material, installation techniques, glues/sealants could lead to vent failure causing property damage, personal injury or death.

⚠ WARNING

All venting must be installed according to this manual and any other applicable local codes, including but not limited to, ANSI Z223.1/NFPA 54, CSA B149.1 and ULC-S636. Failure to follow this manual and applicable codes may lead to property damage, severe injury, or death.

⚠ WARNING

Use of cellular core PVC (ASTM F891), cellular core CPVC, or Radel® (polyphenolsulfone) used in non-metallic venting systems is prohibited.

Non-metallic vent pipe (PVC, CPVC, (PP), PP Flex or other) shall NOT be insulated or covered. Insulating or covering non-metallic venting may cause overheating which diminishes the integrity of the pipe.

INSTALLATIONS IN CANADA require the use of venting material certified to ULCS636. All Gas vents connected to the FT, plastic, stainless steel or otherwise must be certified to this ULC standard. Appropriate selection of vent material is very important for proper performance and safe operation of the FT.
The flue temperature of the FT changes dramatically with changes in operating water temperature. Therefore, it is necessary to assess the application of the boiler to determine the required certified vent class. If the FT is installed in an application where the outlet water temperature exceeds 145°F, and/or installed in a closet, class IIB or higher vent material is required. If the system temperatures are unknown at the time of installation, class IIB or higher venting material is recommended.
IN CANADA all venting used must meet the following requirements:

1. **ULC-S636 certified and marked**
2. **The first 3 feet of venting must be accessible for visual inspection.**
3. **All components used in the vent system must be from a certified manufacturer.**

VENTING INSTALLATION STANDARDS		
MATERIAL	UNITED STATES	CANADA
Stainless Steel	UL 1738	Venting must be ULC-S636 certified for use as venting material. The venting material must be chosen based upon the intended application of the boiler. Class IIa, PVC material is not allowed as the exhaust flue gas can exceed the max. rating of 149°F(65°C).
PVC, sch 40	ANSI/ASTM D1785	
CPVC, sch 40 Polypropylene (PP), PP Flex	ANSI/ASTM F441 UL1738 or ULC-S636	

Table 4. Required Exhaust Vent Material.

4 . **Venting system components can only be mixed with alternate manufacturers' certified components when clearly listed in the Boiler manufacturers Installation Manual.**

5 . **The venting must be installed according to the vent manufacturers installation instructions.**

The unit's vent can terminate through the roof, or through an outside wall.

Vent pipe must pitch upward, toward the vent terminal, not less than 1/4" per foot, so that condensate will run back to the FT to drain. Route vent pipe to the boiler as directly as possible. Seal all joints and provide adequate hangers as required in the venting system manufacturer's Installation Instructions. Horizontal portions of the venting system must be supported to prevent sagging and may not have any low sections that could trap condensate. The unit must not support the weight of the vent pipe.

⚠ WARNING

- Failure to vent this Boiler in accordance with these instructions could cause a fire, resulting in severe property damage, personal injury or death.
- Do not interchange vent systems or materials unless it is specified.
- The use of thermal insulation covering pipe and fittings is prohibited.
- Do not apply an electric damper, draft hood or vent damper with this Boiler.
- Do not locate vent termination where exposed to prevailing winds. Moisture and ice may fall on surface around vent termination. To prevent deterioration, surface must be in good repair (sealed, painted, etc.).

4.5 General Location Guideline

1. Vent system installation must be in accordance with Local codes or, in the absence of local codes, the National Fuel Gas Code, ANSI Z223.1 /NFPA 54 and/or CSA B149.1, Natural Gas and Propane Installation Code.

2. The Boiler is also designed to be installed as a Direct Vent (sealed combustion) type. The air for combustion must then be supplied directly from the outside to the burner. Also, the flue gases must be vented directly to the outdoors (through wall or roof).

3. Do not install venting system components on the exterior of building except as specifically required by these instructions

- Refer to Section 4.8, Table-3 for vent terminal clearances and US ANSI Z223.1/NFPA-54 / In Canada, CSA B149.1
- Vent terminals must be at least 1 foot from any door, window, or gravity inlet into the building.
- Maintain the correct clearance and orientation between the vent and air intake terminals.
- The vent and air intake terminals must be at the same height and their center lines must be spaced apart 12″ minimum.
- The bottom of the vent and air intake terminal must be at least 12″ above the normal snow line. In no case should they be less than 12″ above grade level.
- Do not install the vent terminal directly over windows or doors.
- Air intake terminal must not terminate in areas that might contain combustion air contaminates, such as near swimming pools.
- For sidewall venting, the minimum horizontal distance between any adjacent individual Module (Boiler) vent terminations is twelve (12) inches. It is better to be far more than 12 inches for avoiding frost damage to building surfaces where vent terminations are placed.
- The minimum horizontal distance between any adjacent individual module (boiler) roof vent end piece is one (1) foot.

The vent shall not terminate:
- over public walkways:
- near soffit vents, crawl space vents or other areas where condensate or vapor could create a nuisance or hazard, or cause property damage: or
- where condensate or vapour could cause damage or could be detrimental to the operation of regulators, relief valves or other equipment.

4.6 Locations for Vent Pipe Terminator

		Canadian Installations[1]	U.S. Installations[2]
A =	Clearance above grade, veranda, porch, deck, or balcony	12 in (30 cm)	12 in (30 cm)
B =	Clearance to window or door that may be opened	• 6 in (15 cm) for appliances ≤ 10,000 Btuh (3 kW) • 12 in (30 cm) for appliances > 10,000 Btuh (3 kW) and ≤ 100,000 Btuh (30 kW) • 36 in (91 cm) for appliances >100,000 Btuh (30 kW)	• 6 in (15 cm) for appliances ≤ 10,000 Btuh (3 kW) • 9 in (23 cm) for appliances > 10,000 Btuh (3 kW) and ≤ 50,000 Btuh (15 kW) • 12 in (30 cm) for appliances >50,000 Btuh (15 kW)
C =	Clearance to permanently closed window	See Note 4	See Note 5
D =	Vertical clearance to ventilated soffit located above the terminal within a horizontal distance of 2 ft (61 cm) from the center line of the terminal	See Note 4	See Note 5
E =	Clearance to unventilated soffit	See Note 4	See Note 5
F =	Clearance to outside corner	See Note 4	See Note 5
G =	Clearance to inside corner	See Note 4	See Note 5
H =	Clearance to each side of centerline extended above meter / regulator assy	3 ft (91 cm) within a height of 15 ft (4.6 m)	See Note 5
I =	Clearance to service regulator vent outlet	3 ft (91 cm)	See Note 5
J =	Clearance to nonmechanical air supply inlet to building or the combustion air inlet to any other appliance	• 6 in (15 cm) for appliances ≤ 10,000 Btuh (3 kW) • 12 in (30cm) for appliances > 10,000 Btuh (3 kW) and ≤ 100,000 Btuh (30 kW) • 36 in (91 cm) for appliances > 100,000 Btuh (30 kW)	• 6 in (15 cm) for appliances ≤ 10,000 Btuh (3 kW) • 9 in (23cm) for appliances > 10,000 Btuh (3 kW) and ≤ 50,000 Btuh (15 kW) • 12 in (30 cm) for appliances > 50,000 Btuh (15 kW)
K =	Clearance to a mechanical air supply inlet	6 ft (1.83 m)	3 ft (91 cm) above if within 10 ft (3 m) horizontally
L =	Clearance above paved sidewalk or paved driveway located on public property	7 ft (2.13 m)†	7 ft (2.13 m) for mechanical draft systems (Category I appliances). Vents for Category II and IV appliances cannot be located above public walkways or other areas where condensate or vapor can cause a nuisance or hazard*
M =	Clearance under veranda, porch, deck, or balcony	12 in (30 cm)‡	See Note 5

† A vent shall not terminate directly above a sidewalk or paved driveway that is located between two single family dwellings and serves both dwellings.
‡ Permitted only if veranda, porch, deck, or balcony is fully open on a minimum of two sides beneath the floor.

Notes:
1) In accordance with the current CSA B149.1, Natural Gas and Propane Installation Code.
2) In accordance with the current ANSI Z223.1/NFPA 54, Natural Fuel Gas Code.
3) If locally adopted installation codes specify clearances different than those illustrated, then the most stringent clearance shall prevail.
4) For clearances not specified in CAN/CSA-B149, clearance is in accordance with local installation codes and the requirements of the gas supplier.
5) For clearances not specified in ANSI Z223.1/ NFPA 54, clearance is in accordance with local installation codes and the requirements of the gas supplier.
6) IMPORTANT: Terminal must be placed such that it remains a minimum of 12” above maximum expected snow line. Local codes may have more specific requirements, and must be consulted.

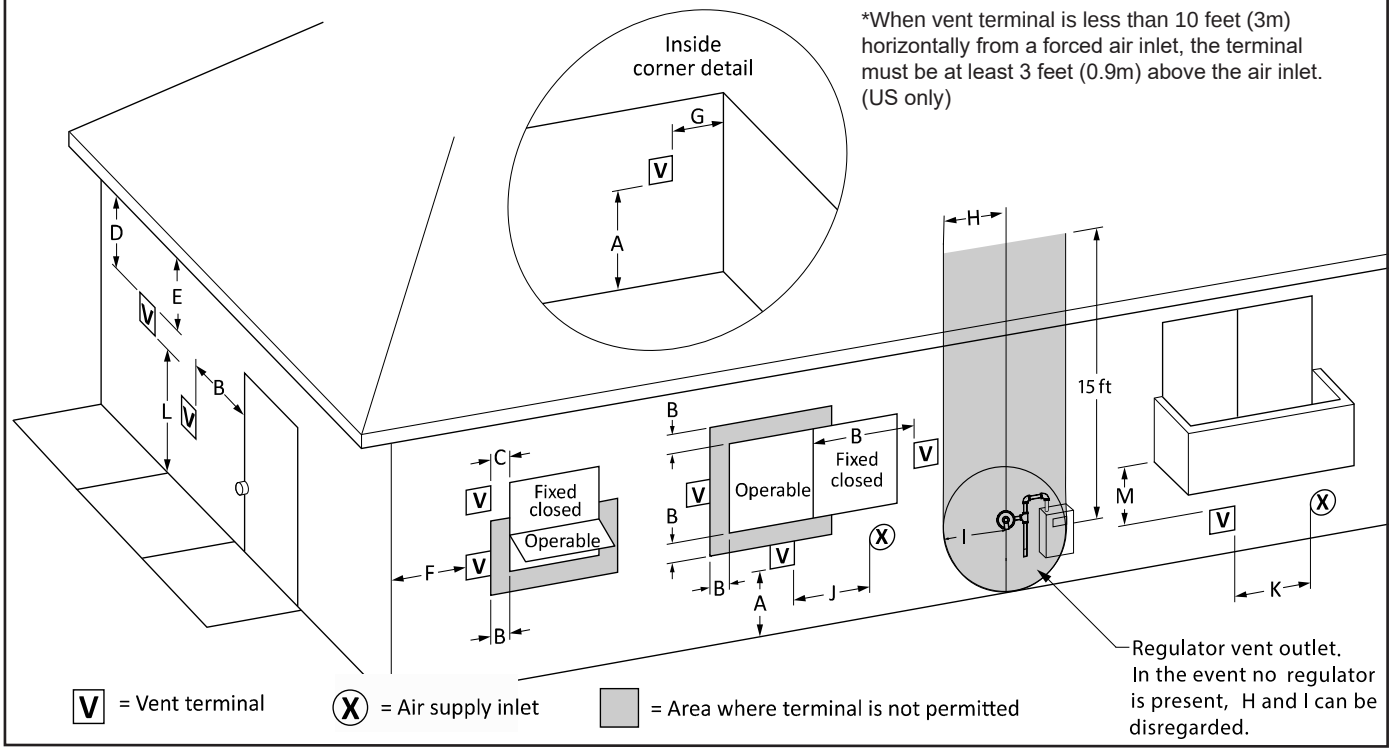

Table 5. Direct Vent Clearances

4.6.1 Venting Requirements in the Commonwealth of Massachusetts

In Massachusetts the following items are required if the side-wall exhaust vent termination is less than seven (7) feet above finished grade in the area of the venting, including but not limited to decks and porches. From Massachusetts Rules and regulations 248 CMR 5.08

1. Installation of Carbon Monoxide Detectors

At the time of installation of the side wall vented gas fueled appliance, the installing plumber or gasfitter shall observe that a hard-wired carbon monoxide detector with an alarm battery back-up is installed on the floor level where the gas appliance is to be installed. In addition, the installing plumber or gasfitter shall observe that a battery operated or hard-wired carbon monoxide detector with an alarm is installed on each additional level of the dwelling, building or structure served by the side-wall horizontally vented gas fueled equipment. It shall be the responsibility of the property owner to secure the services of qualified licensed professionals for installation of hard-wired carbon monoxide detectors.

a. In the event that the side-wall horizontally vented gas fueled equipment is installed in a crawl space or an attic, the hard-wired carbon monoxide with alarm and battery back-up may be installed on the next adjacent floor level.

b. In the event that the requirements of the subdivision cannot be met at the time of completion of installation, the owner shall have a period of thirty (30) days to comply with the above requirements, provided, however, that during said thirty (30) day period, a battery operated carbon monoxide detector with an alarm be installed.

2. Approved Carbon Monoxide Detectors. Each carbon monoxide detector shall comply with NFPA 720 and be ANSI/UL 2034 listed and IAS certified.

3. Signage. A metal or plastic identification plate shall be permanently mounted to the exterior of the building at a minimum height of eight (8) feet above grade directly in line with the exhaust vent terminal for horizontally vented gas fueled heating appliance or equipment. The sign shall read, in print no less than one-half (1/2) inch in size: “GAS VENT DIRECTLY BELOW, KEEP CLEAR OF ALL OBSTRUCTIONS”.

4. Inspection The state or local gas inspector of the side-wall horizontally vented gas fueled appliance shall not approve the installation unless, upon inspection, the inspector observes carbon monoxide detectors and signage installed in accordance with the provisions of 248 CMR 5.08(2)(a) 1-4.

4.7 Common Vent Test

NOTE: This section does not describe a method for common venting FT units. It describes what must be done when an existing unit is **removed** from a common vent system.

⚠ NOTICE

At the time of removal of an existing boiler, the following steps shall be followed with each appliance remaining connected to the common venting system placed in operation, while the other appliances remaining connected to the common venting system are not in operation.

1. Seal any Not Used openings in the common venting system.
2. Visually inspect the venting system for proper size and horizontal pitch and determine there is no blockage or restriction, leakage, corrosion and other deficiencies which could cause an unsafe condition.
3. Insofar as is practical, close all building doors and windows and all doors between the space in which the appliances remaining connected to the common venting system are located and other spaces of the building. Turn on clothes dryers and any appliance not connected to the common venting system. Turn on any exhaust fans, such as range hoods and bathroom exhausts, so they will operate at maximum speed.
4. Place in operation the appliance being inspected. Follow the lighting instructions. Adjust thermostat so the appliance will operate continuously.
5. Operate the main burner for 5 minutes then, determine if the cut-draw overflows to the discharge opening. Use the flame of a match or a candle or the smoke of a cigarette, a cigar or a pipe
6. Once it has been determined, according to the method indicated above, that each device connected to the drainage system is placed in the open air in an adequate manner. Install the doors and windows, fans, the registers of chimneys and gas appliances to their original position
7. Any malfunction of the venting system should be corrected so that the installation conforms to the National Fuel Gas Code, ANSI Z223.1/NFPA 54 and (or) the installation codes CAN/CSA-B149.1. If the size of a section of the evacuation system must be changed, the system should be modified to comply with the minimum values of the relevant tables of appendix F of the National Fuel Gas Code, ANSI Z223.1/NFPA 54 and (or) the installation codes CAN/CSA-B149.1

⚠ AVIS

Au moment du retrait d'une chaudière existante, les mesures suivantes doivent être prises pour chaque appareil toujours raccordé au système d'évacuation commun et qui fonctionne alors que d'autres appareils toujours raccordés au système d'évacuation ne fonctionnent pas:

1. Sceller toutes les ouvertures non utilisées du système d'évacuation.
2. Inspecter de façon visuelle le système d'évacuation pour déterminer la grosseur et l'inclinaison horizontale qui conviennent et s'assurer que le système est exempt d'obstruction, d'étranglement, de fuite, de corrosion et autres défaillances qui pourraient présenter des risques.
3. Dans la mesure du possible, fermer toutes les portes et les fenêtres du bâtiment et toutes les portes entre l'espace où les appareils toujours raccordés au système d'évacuation sont installés et les autres espaces du bâtiment. Mettre en marche les sécheuses, tous les appareils non raccordés au système d'évacuation commun et tous les ventilateurs d'extraction comme les hottes de cuisinière et les ventilateurs des salles de bain. S'assurer que ces ventilateurs fonctionnent à la vitesse maximale. Ne pas faire fonctionner les ventilateurs d'été. Fermer les registres des cheminées.
4. Mettre l'appareil inspecté en marche. Suivre les instructions d'allumage. Régler le thermostat de façon que l'appareil fonctionne de façon continue.
5. Faire fonctionner le brûleur principal pendant 5 min ensuite, déterminer si le coupe-tirage déborde à l'ouverture de décharge. Utiliser la flamme d'une allumette ou d'une chandelle ou la fumée d'une cigarette, d'un cigare ou d'une pipe.
6. Une fois qu'il a été déterminé, selon la méthode indiquée ci-dessus, que chaque appareil raccordé au système d'évacuation est mis à l'air libre de façon adéquate. Remettre les portes et les fenêtres, les ventilateurs, les registres de cheminées et les appareils au gaz à leur position originale.
7. Tout mauvais fonctionnement du système d'évacuation commun devrait être corrigé de façon que l'installation soit conforme au National Fuel Gas Code, ANSI Z223.1/NFPA 54 et (ou) aux codes d'installation CAN/CSA-B149.1. Si la grosseur d'une section du système d'évacuation doit être modifiée, le système devrait être modifié pour respecter les valeurs minimales des tableaux pertinents de l'appendice F du National Fuel Gas Code, ANSI Z223.1/NFPA 54 et (ou) les codes d'installation CAN/CSA-B149.1

⚠ NOTICE

<u>DO NOT COMMON VENT FT UNITS.</u> FT units are never permitted to share a vent with Category I appliances.

⚠ AVIS

<u>NE PAS ÉVENT COMMUNE FT UNITÉS</u>. FT unités ne sont jamais autorisés à partager un évent Catégorie I avec les appareils.

4.8 Air Supply and Vent Connections

4.8.1 Vent / Air Pipe Lengths for dual pipe venting systems.

	3” Combustion Air or Vent Pipe			4” Combustion Air or Vent Pipe		
	Min. Combustion Air Pipe	Min. Vent Pipe	Max. Combustion Air or Vent Pipe	Min. Combustion Air Pipe	Min. Vent Pipe	Max. Combustion Air or Vent Pipe
FTHW301/399 NG & LP	0 ft* (0 M)	3 ft (1 M)	65 ft (19.5 M)	0 ft* (0 M)	3 ft (1 M)	150 ft (45 M)
Deductions per 90° Elbow	5 ft (1.5 M)			5 ft (1.5 M)		
Deductions per 45° Elbow	2.5 ft (.75 M)			2.5 ft (.75 M)		
Max. # of Total Elbows on Air Intake/Exhaust Elbow	Intake: up to 6, Exhaust: up to 6			Intake: up to 8, Exhaust: up to 8		

Table 6. Maximum Vent / Air Pipe Lengths for either 3” or 4” Intake Air or Exhaust Vent Pipes (PVC schedule 40, CPVC schedule 40, SS, PP)

*Appliance needs to vent outdoors using approved vent caps and following all guidelines as noted in the Installation Manual.

NOTES:
- One must include all elbows on the air intake and exhaust piping in determining the maximum equivalent length of the air intake and exhaust vent piping.

Example: 3” venting system desired.
Air intake piping: Two 90 elbows and 40 ft of straight pipe: 2 x 5 ft + 40 ft = 50 ft (okay)
Exhaust vent piping: Two 90 elbows and 45 ft of straight pipe: 2 x 5 ft + 45 ft = 55 ft (okay)

NOTE: Proper protection against debris in the air intake (through using a downward spout and/or screen) to avoid debris pick-up / falling into the appliance is required.

4.10.2 Direct Venting

The FT boiler uses 3″ or 4″ diameter exhaust and 3″ or 4″ diameter intake air duct. To draw air directly from and send exhaust directly to the outside of the building, make sure to create an airtight seal from the boiler collar to the vent termination.

(For installations in Canada) field-supplied plastic vent piping must comply with CSA B149.1 (latest edition) and be certified by the Standard For Type BH Gas Venting Systems, ULC-S636. Components of this listed system must not be interchanged with other vent systems or unlisted pipes or fittings. All plastic components and specified primers and glues of the certified vent system must be from a single system manufacturer and must not be intermixed with another system manufacturer’s parts.

- **Tightening — Boiler Collar (Socket) to Vent Pipe & Inlet Pipe**
  - Clean and dry your selected PVC, CPVC vent pipe and boiler collar (socket).
  - Push the pipe into the collar (socket) until it touches the bottom of the socket fitting.
  - For 4” installations, install a field supplied 3” to 4” adaptor. Adaptor must be installed at the boiler’s exhaust connection.

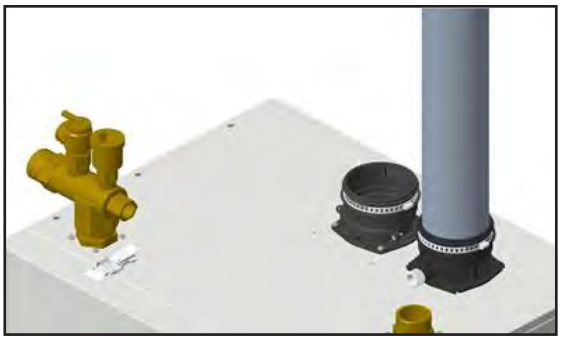

3” pipe

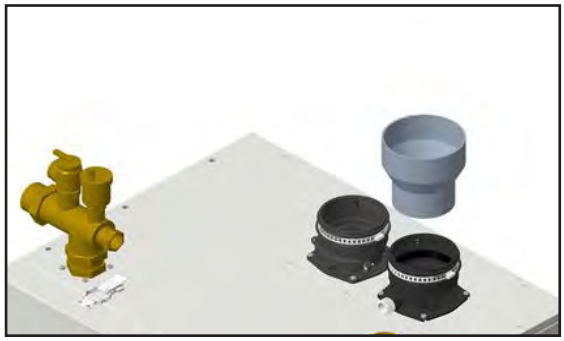

4” pipe connected, using a (3” to 4”) adapter

4.9 Indoor Combustion Air

Read and follow section 4.5.1 Guidelines first.

1. Insert the termination end cap into the intake air duct.

2. Provide two openings to allow for circulation of combustion air as specified by ANSI Z223.1/NFPA 54. In Canada refer to CSA B-149.1

NOTE: The FT needs fresh air for safe operation and must be installed so there are provisions for adequate combustion and ventilation air.

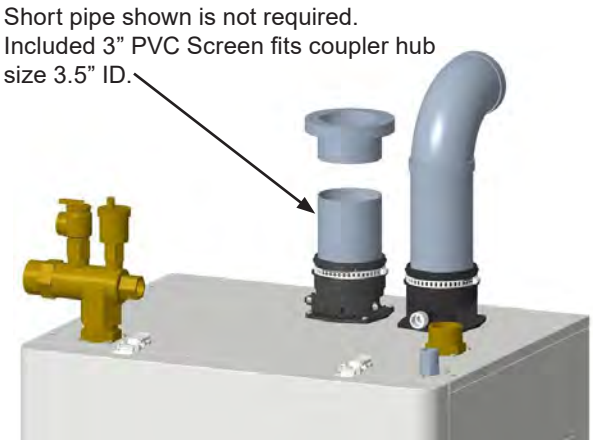

Model	FTHW301	FTHW399
Maximum Input (BTU/H)	301,000	399,000
Indoor make up air is provided, a minimum free area of 1 sq. inch. per 1,000 BTU/H	301 in^2 17.5″ (W) x 17.5″ (H)	399 in^2 20” (W) x 20” (H)

Table 7. Max BTU/H

4.10 Vent / Air Pipe Terminations

Vent Air Terminations:
After connecting terminals install vent screens on both the vent and air inlet.

Two 3” vent screens are included with each unit. Additional replacement screens or 4” vent screens are available for purchase.

3” Vent Screen P/N - FT1730
4” Vent Screen P/N - 10-391 (1 bird screen per part number)

4.10.1 Vertical Vent Termination

- Direct Vent - Vertical Terminations with Sloped Roof

Vent Screens are required

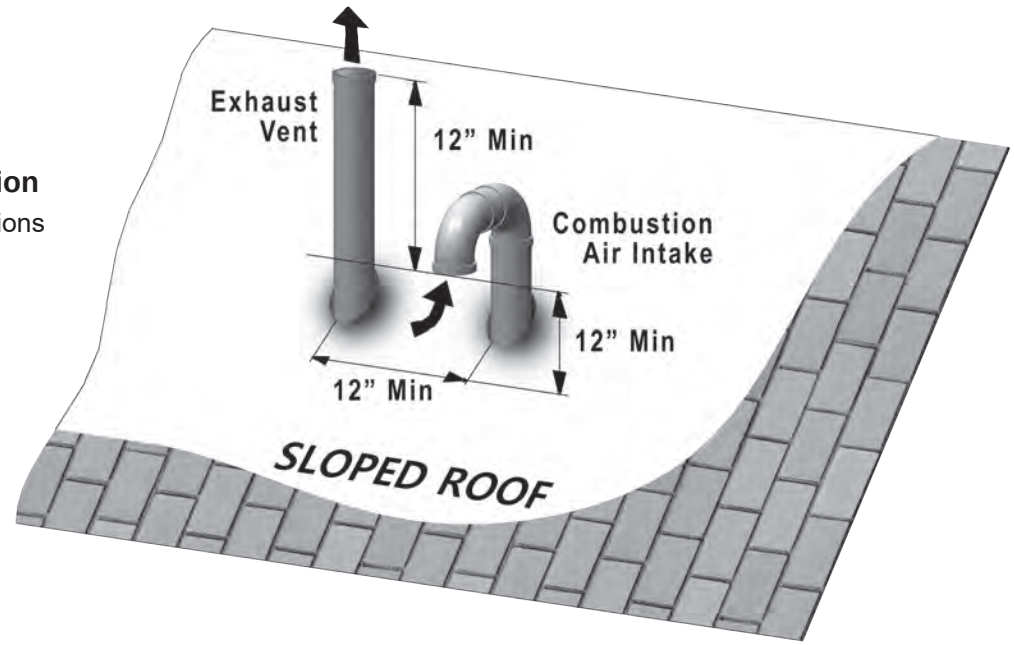

Vent / Air Pipe Terminations (continued)

4.10.2 Horizontal Vent Termination (Direct Vent - Sidewall Termination)

Note: For cases A thru C below, the location of the exhaust terminal MUST be downstream (or down-wind) of the location of the combustion air intake pipe to avoid flue gas recirculation.

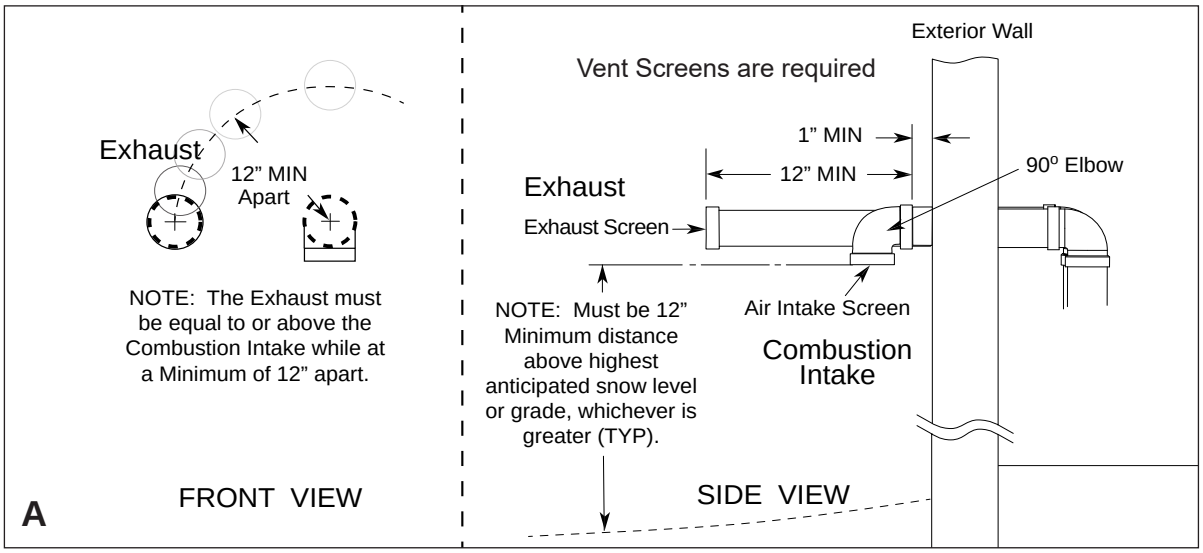

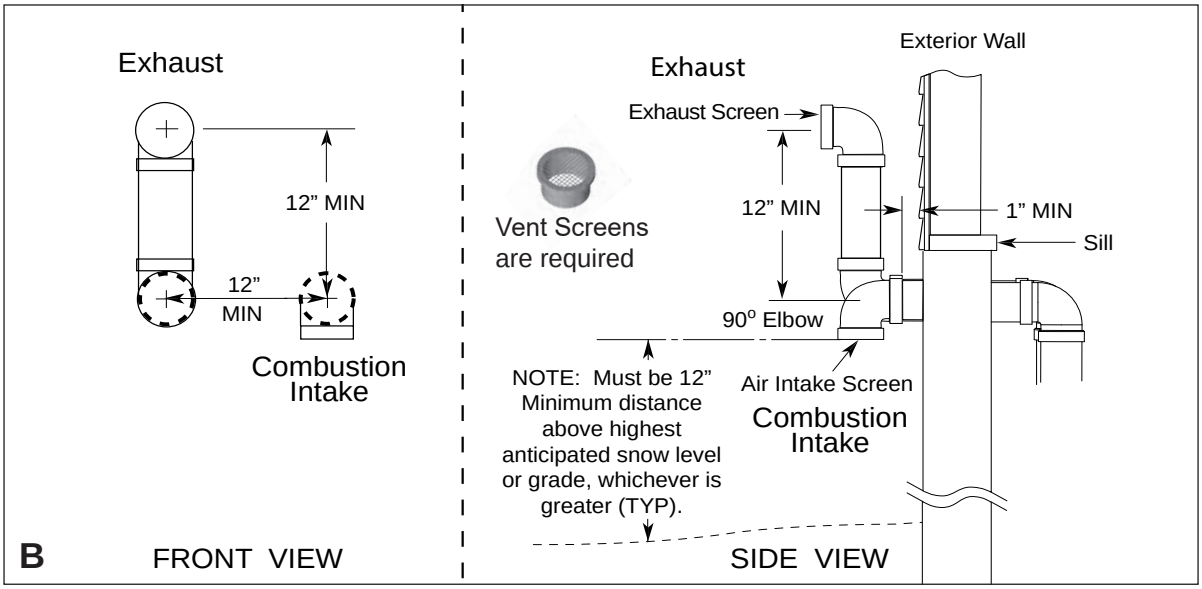

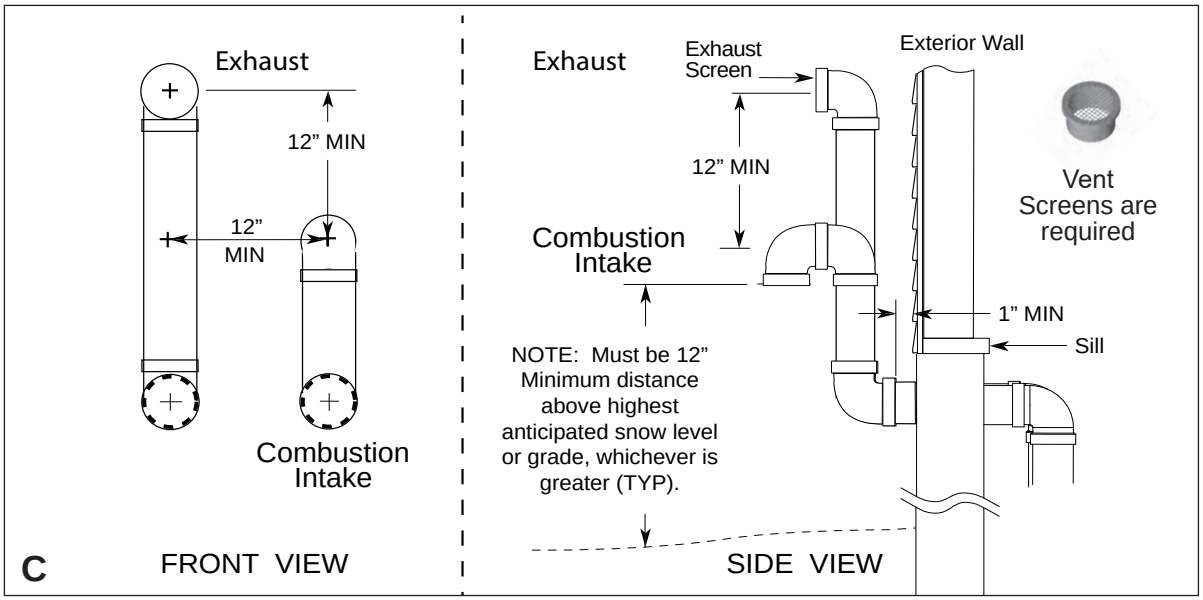

4.10.3 Low Profile Two-Pipe Sidewall Venting

⚠ NOTICE

Follow the manufacturer's installation guidelines included with the Low Profile Vent Termination Kit for installation requirements and guidelines. Failure to provide properly separated combustion air and exhaust air will result in flue gas cross-contamination which will cause shut-downs and ignition failures. Installations in alcoves or behind bushes, air conditioners, and other obstructions, will introduce cross-contamination (exhaust air going back into the combustion air inlet) and this will result in poor performance and reliability issues.

1. Low profile terminations must be installed in the proper orientation. See Figure 1 for possible mounting orientations.

2. Multiple Low profile terminations must be installed with a minimum horizontal separation between the edge of the air inlet and the edge of the vent of the adjacent termination of at least 36 inches (90 cm). See Figure 3.

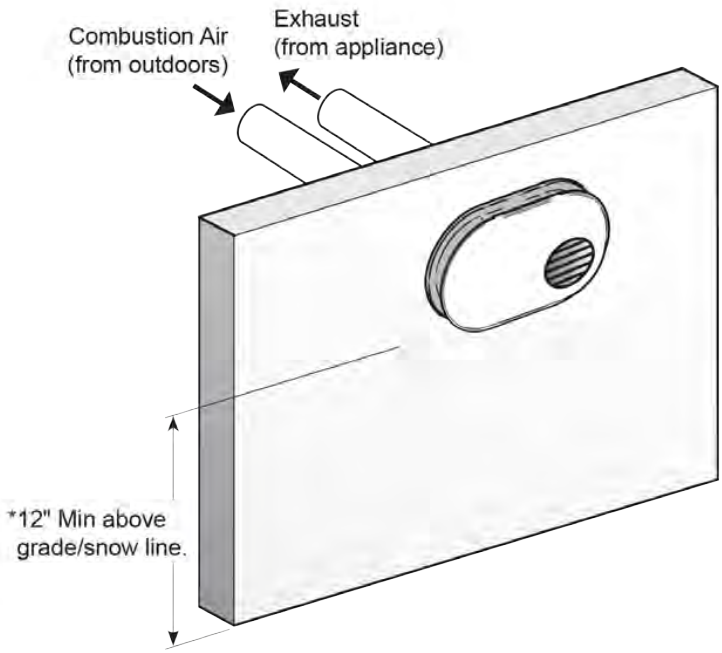

Figure 2. Exterior view of dual pipe termination

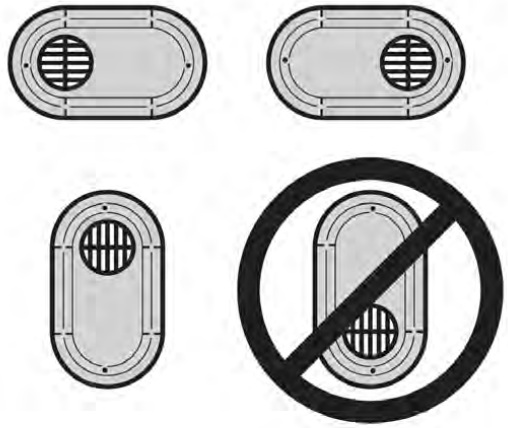

Figure 1. Possible orientations of low profile 2-pipe termination

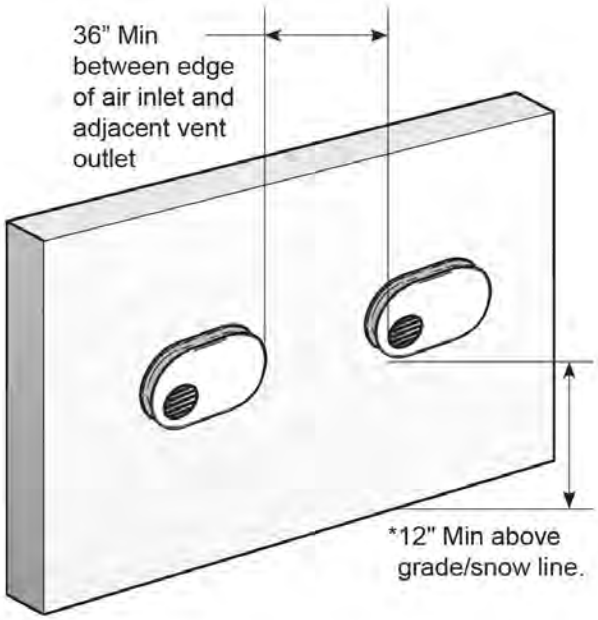

Figure 3. Multiple 2 pipe low profiles termination minimum spacings

* Clearance above highest anticipated snow level or grade, or as required by local codes, whichever is greater.

4.10.4 Flexible Vent Systems

Using flexible polypropylene in an existing vertical chimney.

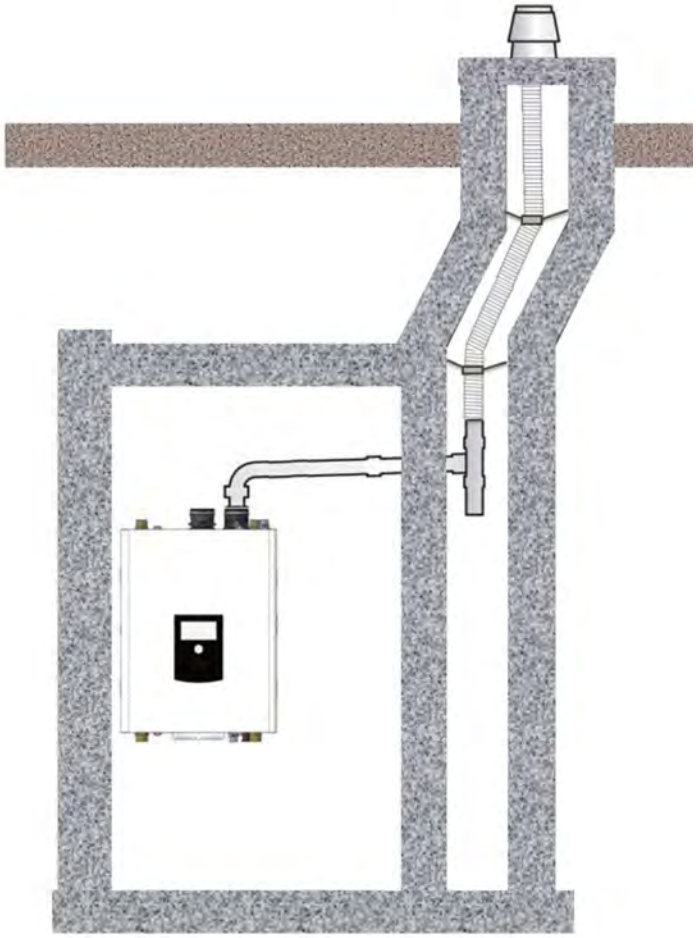

NOTE : Only VERTICAL installations are allowed. Horizontal terminations are prohibited.
The use of proper adapters and supports are required to fully complete the installation.
The following table lists the flexible vent models that are approved for use with this appliance in addition to the maximum allowable vent lengths for the desired vent system.

Model Type.	Vent Dia.	Flexible PP
FTHW301/399	3 in	65ft

All flexible vent pipe must be installed VERTICALLY through the roof. No horizontal terminations are permitted. Flexible vent materials can be used with room air for combustion only.
Refer to the manufacturer’s literature for detailed information and guidelines.

NOTE : Equivalent length of horizontal piping and elbow(s) must be deducted from the maximum allowed 65 ft of 3" flexible PP venting.

4.10.5 Concentric Vent Termination

- Direct Vent - Optional Horizontal and Vertical Concentric Vent using 3” or 4” intake air and exhaust vent pipes.

NOTE: The intake and exhaust pipe lengths of a concentric termination must be included in the maximum allowed venting length calculation.

NOTE: Concentric Vent Terminations cannot be less than 36” apart in multi-unit installations. Consult local codes and the manufacturer’s guidelines for acceptable separation distances.

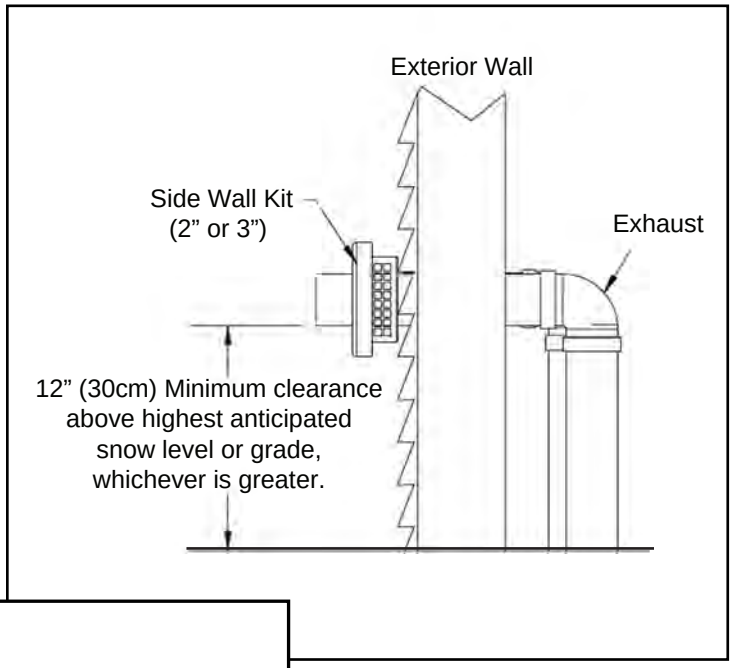

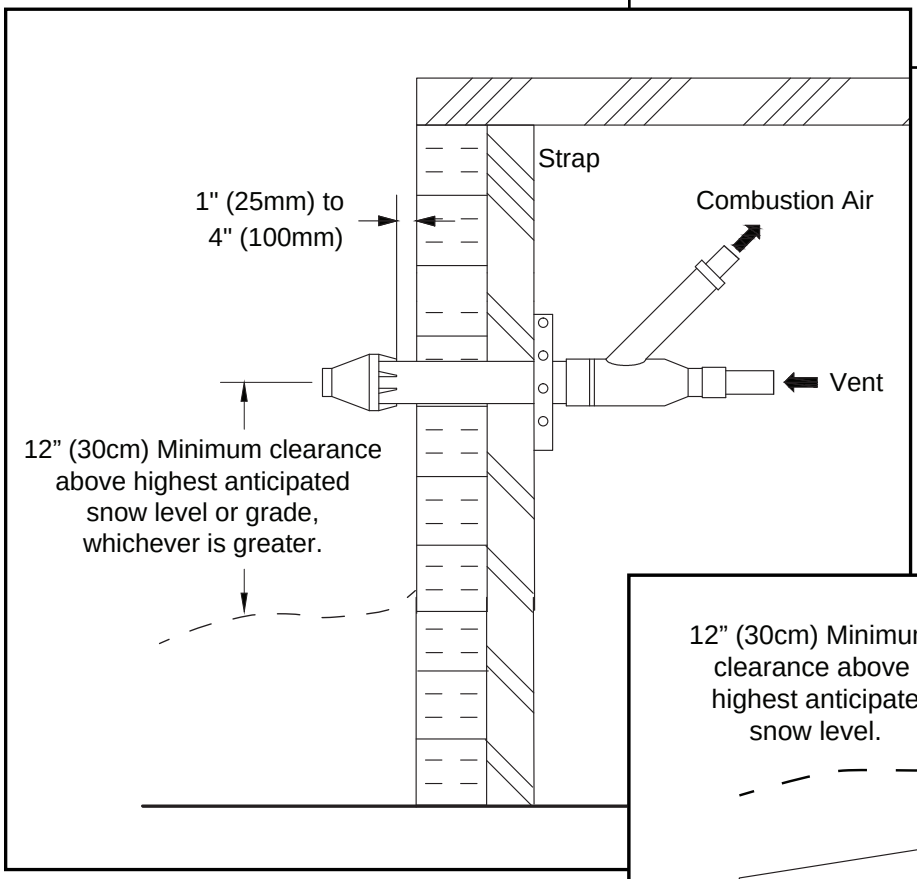

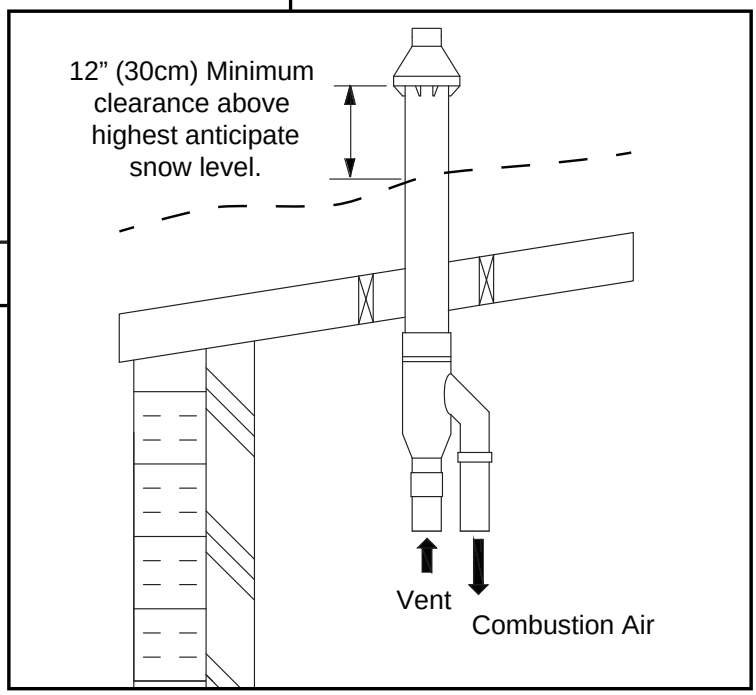

4.11 Gas Supply and Piping

Gas piping should be supported by suitable hangers or floor stands, near the appliance.

Review the following instructions before proceeding with the installation.

1. Verify that the Natural Gas rating plate on the appliance matches with the available gas supply. FT will function properly at elevations up to 10,000 feet (3050 m). Refer to Section 4.14 for High Altitude Settings.
2. For minimum and maximum supply pressures, see Table 11 on page 33.
3. Refer to Tables 5, 6 and 7 for proper gas pipe sizing.
4. Run gas supply line in accordance with all applicable codes.
5. Locate and install manual shutoff valves in accordance with state and local requirements.
6. A sediment trap must be provided upstream of the gas controls in case the gas connection is made on the bottom of the boiler. When using the top gas connection, the boiler is equipped with an internal sediment trap.
7. All threaded joints should be coated with piping compound resistant to action of liquefied petroleum gas.
8. The unit must be isolated from the gas supply system by closing its individual manual shutoff valve during any pressure testing of the gas supply piping system at test pressures equal to or greater than 1/2 PSIG (3.45kPa).
9. The appliance and its gas connection must be leak tested before placing it in operation.
10. Purge all air from gas lines.

⚠ WARNING:
Open flame can cause gas to ignite and result in property damage, severe injury, or loss of life.

NOTE: The FT boiler and all other gas appliances sharing the gas supply line must be firing at maximum capacity to properly measure the inlet supply pressure. The gas supply pressure MUST be measured at the gas pressure test port location at the top and bottom gas connection on the boiler.. Low gas pressure could be an indication of an undersized gas meter, undersized gas supply lines and/or an obstructed gas supply line.

Schedule 40 Metal Pipe Capacity for 1.6 Specific Gravity Undiluted Propane				
Nominal Pipe Size @ 11” W.C. Inlet and 0.5” W.C. Pressure Drop				
Size	1”	1-1/4”	1-1/2”	2”
Length	Maximum Capacity in Thousands of BTU per Hour			
20’	787	1616	2422	4664
40’	541	1111	1664	3205
60’	434	892	1337	2574
80’	372	763	1144	2203
100’	330	677	1014	1952

NOTES: 1. Follow all local and national propane gas codes for line sizing and equipment requirements. 2. Verify that inlet gas pressure remains between 4 and 13 inches of water column before and during operation.
Source: ANSI Z223.1-80 National Fuel Gas Code.

Table 8. Nominal Pipe Size, Propane

Schedule 40 Metal Pipe Capacity for 0.60 Specific Gravity Natural Gas				
Nominal Pipe Size @ 0.30” W.C. Pressure Drop				
Size	1”	1-1/4”	1-1/2”	2”
Length				
20’	350	730	1100	2100
40’	245	500	760	1450
60’	195	400	610	1150
80’	170	350	530	990
100’	150	305	460	870

Table 9. Nominal Pipe Size, Natural Gas

Equivalent Lengths of Straight Pipe for Schedule 40 Fittings				
Nominal Pipe Size				
Fitting	1”	1-1/4”	1-1/2”	2”
Linear Feet				
90° Elbow	5.2	6.6	7.4	8.5
Tee	6.6	8.7	9.9	12

Table 10. Equivalent Pipe Lengths

Gas Supply and Piping (continued)

- The gas connection fitting is, **1”** male NPT.
- The FT boiler is standard equipped with top and bottom gas connections. Factory standard, the top connection is capped. If the contractor wants to connect the gas supply to the top connection, simply remove its cap and install this cap on the bottom gas connection. The bottom connection now services as the sediment trap.
- If the lower gas connection is used, an external sediment trap must be installed.
- The supply line must be sized for the maximum output of the boiler model being installed. If there are additional gas appliances from the main supply line, you must measure connected on the same main gas supply line, according to the COMBINED total maximum BTUH draw for the appliances as if they were all operating at the same time.
- Measure the length of the gas supply line from the gas meter to the boiler. Use the tables in this manual or refer to the gas line manufacturers sizing information to determine the correct supply pipe size.
- The manual gas shut-off valve in the gas supply line should be installed close to the unit as shown below.
- To facilitate any future maintenance, it is also recommended that an approved gas union fitting be installed in the supply line between the shut-off valve and the 1˝ male NPT connection on the boiler.

1) Install an approved gas line pipe to gas line connection gas boiler . Include manual shut off valve and gas union on top of the connection, as shown or below the boiler, incase gas piping is brought in from the bottom..
2) Test gas pressure to make sure it meets the minimum standards and does not exceed the maximum standards for the boiler.
3) Leak test the gas line pipe before placing the unit in operation. Use approved leak detector liquid solutions only to check for leaks.

- Do Not Operate the boiler until all connections have been completed, checked for leaks, and ensure that the heat exchanger is filled with water.

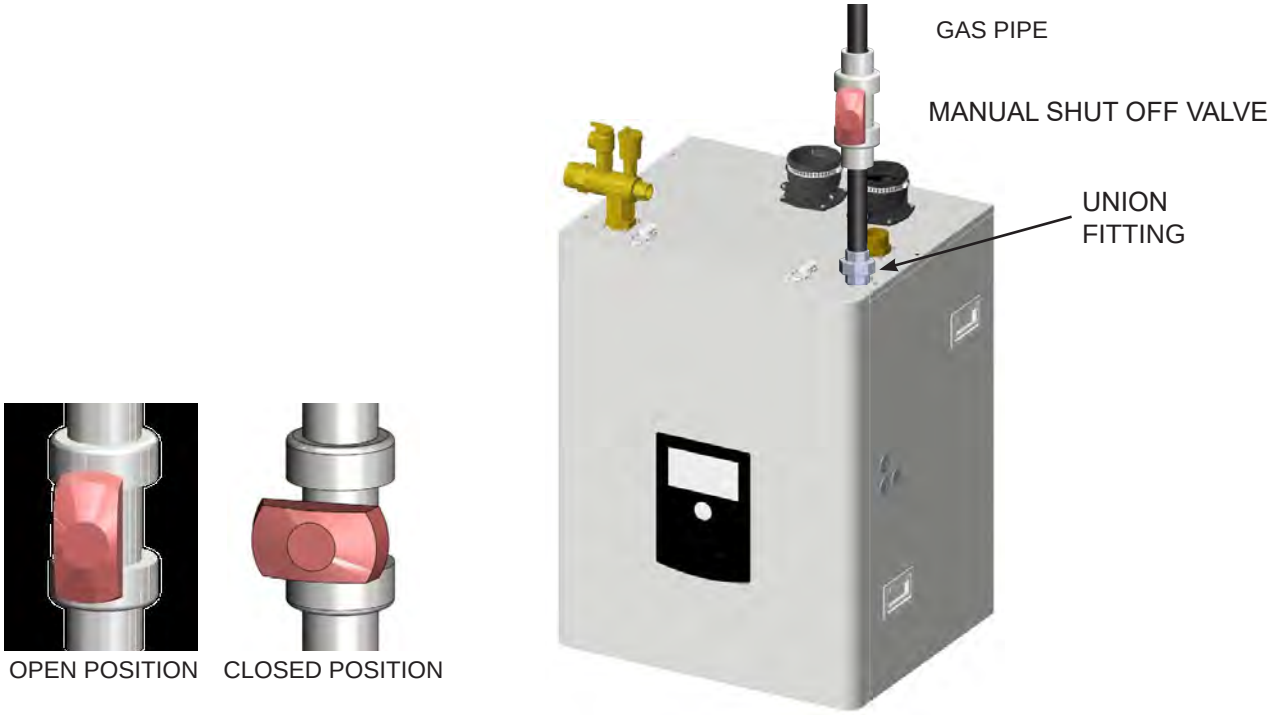

Figure 4. Gas Line Shut Off Valve

Suggested Natural Gas (NG) Layout

NOTE: Total gas supply capacity must not be less than the total demand capacity of the connected appliances.

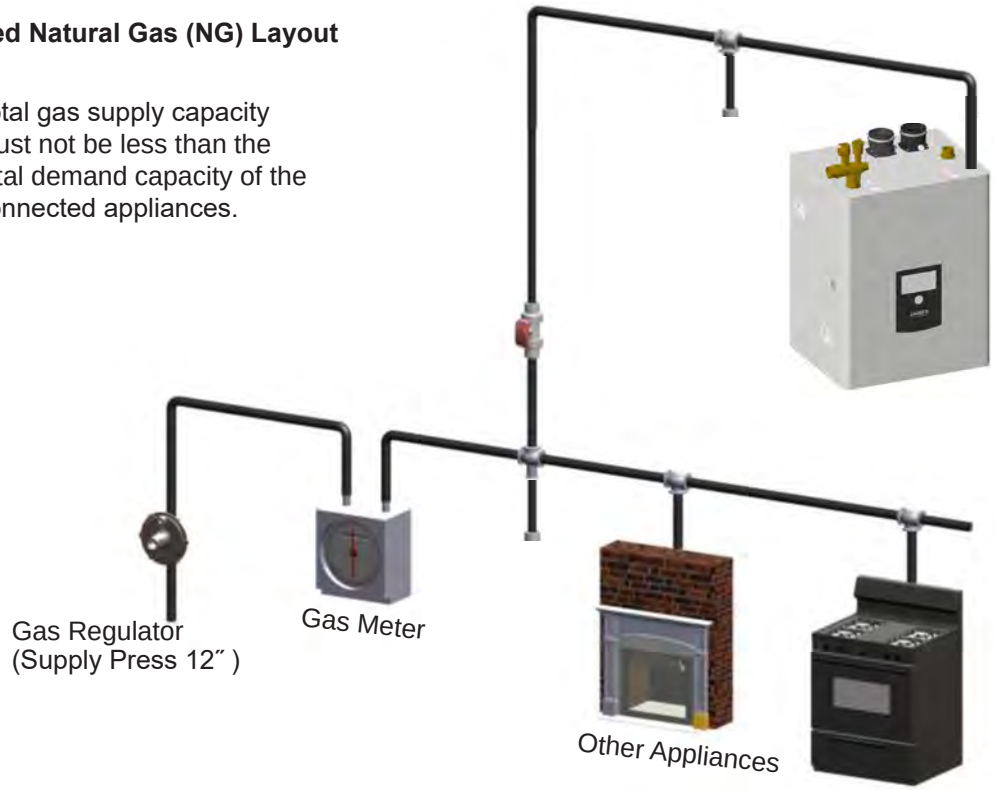

Suggested Propane Gas (LP) Layout

NOTE: Total gas supply capacity must not be less than the total demand capacity of the connected appliances.

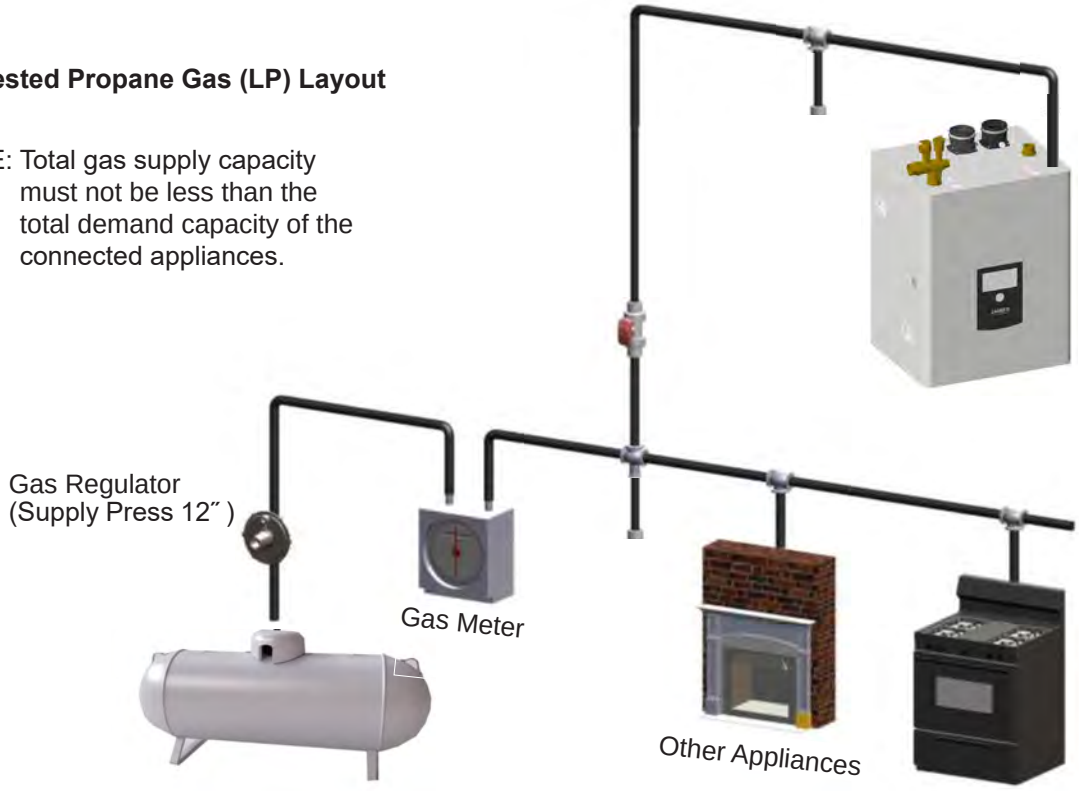

- The boiler must be installed downstream of the gas meter for adequate gas supply.
- The gas piping must not be less than **1**" **female NPT** on FTHW301/399 models.

4.12 Gas Supply Pressure

Supply Gas INLET port

Refer to Note (below) for gas pressure reading.

Manifold/Offset

Do Not Adjust without using a combustion analyzer to verify adjustment. Adjust ONLY when in MIN Fire and when using a combustion analyser. See Section 4.13 on page 34 for step by step details.

Gas OUT / Manifold Pressure Port

The Maximum and Minimum gas line pressures must be at Max Fire operation.

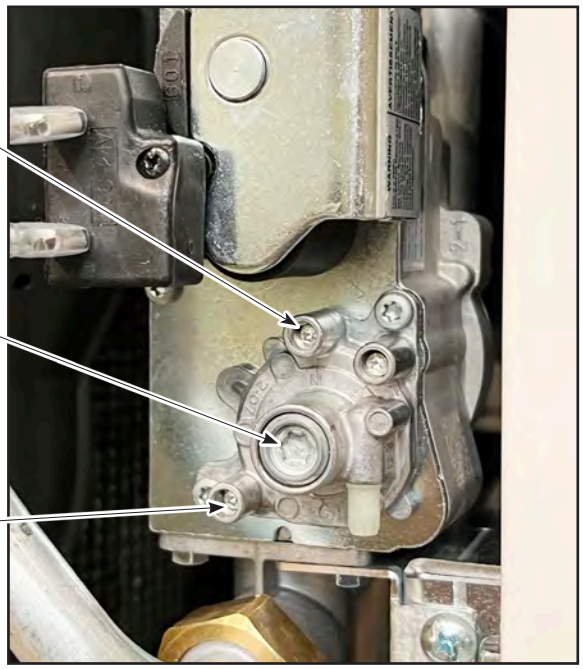

Photo 1. Gas Valve

LP Gas		Natural Gas	
Maximum Pressure	13.0” WC	Maximum Pressure	10.5” WC
Minimum Pressure	8.0” WC	Minimum Pressure	3.5” WC

Table 11. Gas Supply Pressures

NOTE: The gas supply pressure **must** be measured at the gas pressure test port located at the top or bottom gas connection external to the boiler. This eliminates removal of the front door.

- The appliance and its individual shut-off valve must be disconnected from the gas supply piping system during any pressure testing of the system at test pressures in excess of 1/2 psi (3.5 kPa).
- Shut off the gas supply valve prior to loosening the pressure port screws before you check the gas inlet pressure.
- Make sure to install the front door and engage both the top and bottom latches of the front door during combustion testing. Tighten gas pressure port screw(s) when completed with the combustion set-up.

4.13 Adjusting Combustion

1. Remove the front cover by opening the four clips on the boiler front cover - (2 top, 2 bottom) pick up the cover and lift the cover off.

2. Turn ON the GAS and WATER supply to the FT.

3. Turn ON the FT.

4. Ensure your FT is set for the correct altitude. The default setting is for altitudes of 0~1,999 ft above sea level. If your FTHW floor is installed at an altitude of 2,000 ft,or greater the correct altitude setting should be set according to Section 4.14 before you continue tuning this unit.

5. Check gas inlet pressure at inlet pressure test port. (See previous page).

6. Establish a call for heat. You may need to disconnect the outdoor reset if you are making this gas pressure reading during warm weather.

7. Connect a manometer to the manifold pressure port. For dual port manometers, use the positive pressure side. Check for proper manifold gas pressure. Refer to Table 13.

8. Setup your combustion analyser and place the sensor into the combustion test port located on the exhaust adaptor on top of the boiler.

9. Per Section 4.15 (page 37) for Max Fire, change dip switch 6 to ON. The unit will cycle up to MAX fire.

10. WAIT for your combustion analyser to stabilize. This may take up to 3 minutes depending on your combustion analyser. Then check the CO_2 measurement for MAX Fire. Refer to Table 12 for acceptable MAX fire combustion readings Do NOT attempt to adjust CO_2 at MAX Fire. ONLY adjust CO_2 in MIN Fire operation.

11. For MIN Fire, change dip switch 6 to OFF and 7 to ON. The unit will cycle down to MIN Fire.

Note: When in Low Fire the burner should remain on. If the flame dies out after a few seconds while in Low Fire the gas input to the burner is too lean and will need to be increased slightly by using the offset adjustment. Turn the offset adjustment 1/8” clockwise and allow burner to cycle. Only adjust clockwise until the burner is able to remain lit. Once stable on Low Fire continue onto Step 12.

12. WAIT for your combustion analyser to stabilize. Then check the CO_2 measurement for MIN fire. Refer to Table 9 for acceptable MIN fire combustion readings.

13. Open the Gas Valve Adjustment Port by removing the cap screw with a # T15 wrench.

14. Then use the # T15 wrench to make a minor adjustment (1/8 turn) to either increase or decrease CO2. See Photo 1 on page 33.

15. It may be necessary to go back and forth between HI Fire and LOW Fire several times (and adjusting only at LOW Fire), before CO2 at both are within acceptable levels. Be sure to put the adjustment port cap screw back onto the valve when done.

16 Once the CO2 and manifold pressure measurements for both MIN and MAX Fire are acceptable, set DIP switches 6 and 7 to the OFF position for Nominal Fire (normal operation).

17. Remove your combustion analyser from the Test Port and be sure to thread the Test Port plug back into position.

18. Re-connect outdoor reset if it was disconnected, put the boiler cover back on and secure the clips that hold the cover in place.

WARNING

Installer is required to verify combustion settings as part of the installation process.

Standard Factory Setting is for MAX Fire. 9.0% CO2 @ 0-2,000 ft altitude (Natural Gas).

CO_2 value		Natural Gas (NG)		Propane Gas (LP)	
		3″ VENT	4″ VENT	3″ VENT	4″ VENT
FTHW301/399 (all altitudes)	MAX FIRE	8.5 - 10.5%		9.5 - 11%	
	MIN FIRE	8 - 10%		9 - 10.5 %	

Table 12. CO_2 Values

Adjusting Combustion (continued)

Manifold Pressure		Natural Gas		Liquid Propane	
		3” VENT	4” VENT	3” VENT	4” VENT
FTHW301	Max Fire	-0.28” WC	-0.28” WC	-0.28” WC	-0.28” WC
	Min Fire	-0.015” WC	-0.015” WC	-0.015” WC	-0.015” WC
FTHW399	Max Fire	-0.48” WC	-0.48” WC	-0.48” WC	-0.48” WC
	Min Fire	-0.015” WC	-0.015” WC	-0.015” WC	-0.015” WC

Table 13. Manifold Pressures

NOTE: Values in the range of -0.01 to -.50 inches of WC are indicative of proper set-up. If your values are outside this range, call technical support.

4.14 High Altitude Installations. 2,000’ to 10,000’

NOTE: For installations above 5,000’, a high altitude conversion kit must also be installed. See Table 14

The FT is shipped with a default factory setting for installation at an altitude of 0 to 2,000’ (approx). For installations at altitudes above 2,000’ the FT Boiler has an adjustment in the Installer Parameters Mode. See Table 14.

For installations above 5,000’ the High Altitude Installer adjustment must be made ***and*** an additional ‘High Altitude Kit’ must be purchased. The high altitude kit also has directions for installation and settings.

Altitude of Installation	Select #	Derates to	Part # for additional High Altitude Kit	
			301 / 399 Natural	301 / 399 Propane
0 - 2,000 ft (0 - 609 m)	0 - 2	0%	N/A	N/A
2,000 - 5,000 ft (609 - 1,522 m)	3 - 4	10%	N/A	N/A
5,000 - 8,000 ft (1,522 - 2,436 m)	5 - 7	20%	FT4139	FT4140
8,000 - 10,000 ft (2,436 - 3,045 m)	8 - 10	25%	FT4139	FT4140

Table 14. Altitude of Installation and Selection Number

1. With the Power turned OFF, press the 'Modes button' for 5 seconds to get into the Installer Parameters Mode.
2. Turn the dial (E) until ‘**33:HA**’ appears.
3. Press the dial (E).
4. Select the proper high altitude value by turning the dial.
5. Press the dial again (E) to save the setting.
6. Press the ‘Modes button’ and the display will turn off.
7. Push the power button on the display to turn the boiler back on.

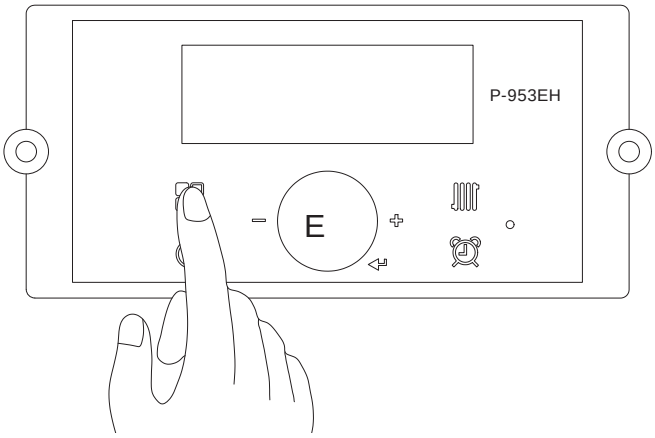

4.15 Natural Gas to Propane Conversion

The FTHW301 and FTHW399, condensing boilers are configured for Natural Gas (NG) from the factory. A Propane Conversion Kit is included with every FT. The gas conversion kit will show you how to convert your FT boiler to propane gas. If your FT does not have the bag containing the conversion kit, a replacement kit can be obtained. Contact the manufacturer and request a replacement conversion kit.

WARNING

This gas conversion kit shall be installed by a qualified service agency in accordance with the manufacturer's instructions and all applicable codes and requirements of the authority having jurisdiction. The information in these instructions must be
followed to minimize the risk of fire or explosion or to prevent property damage, personal injury or death. The qualified service agency is responsible for the proper installation of this kit. The installation is not proper and complete until the operation of the converted appliance is checked as specified in the manufacturer's instructions supplied with the kit. Installation must conform to local codes and the latest edition of the National Fuel Gas Code, ANSI Z223.1 and CSA-B149.1. Failure to follow instructions could result in serious injury or property damage. The qualified agency performing this work assumes responsibility for gas conversion.

NOTICE

If your installation altitude is greater than 2000 ft, check that the "High Altitude" Installer setting has been adjusted to suit your installation altitude. 4.14

CAUTION

This boiler has already been set to burn natural gas, but can be converted to burn LP gas. Before placing the boiler into operation, verify that the proper type of gas is supplied to your boiler.

Squeeze the release button to unlatch the clasp

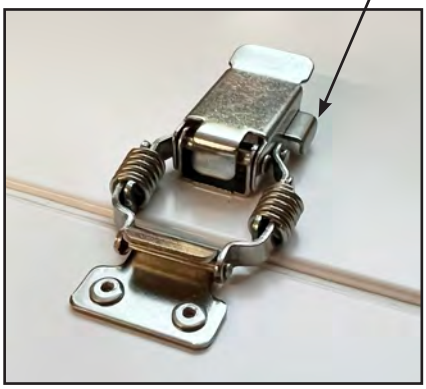

Photo 2. Clasps (4X)

Figure 5. Open Front Panel

Model	Natural Gas (NG)	Propane Gas (LP)	Orifices
FTHW301	Part # FT4143 6.55 mm (0.258")	Part # FT4119 5.40 mm (0.216")	
FTHW399	Part # FT4118 6.7 mm (0.264")	Part # FT4119 5.40 mm (0.216")	

Table 15. Gas Conversion Parts

This conversion shall be installed by a qualified service agency in accordance with the manufacturer's instructions and all applicable codes and requirements of the authority having jurisdiction. If the information in these instructions is not followed exactly, a fire, an explosion or production of carbon monoxide may result causing property damage, personal injury or loss of life. The qualified service agency is responsible for the proper and complete installation of this kit. The installation is not proper and complete until the operation of the converted appliance is checked as specified in the manufacturer's instruction supplied with the kit. Installation must conform to local codes and the latest edition of the National Fuel Gas Code, ANSI Z223.1 and CAN-B149.1. Failure to follow instructions could result in serious injury or property damage. The qualified agency performing this work assumes responsibility for gas conversion.

Ce conversion doit être installé par un organisme de service conformément aux instructions du fabricant et tous les codes et les exigences de l'autorité compétente. Si les informations contenues dans ces instructions n'est pas suivi à la lettre, un incendie, une explosion ou de la production de monoxyde de carbone mais résultat causant des dommages matériels, des blessures ou des pertes de vie. Le service est responsable pour la bonne et complète l'installation de ce kit. L'installation n'est pas correcte et complète jusqu'à ce que le fonctionnement de l'appareil converti est vérifiée comme spécifié dans le manuel d'instruction fourni avec le kit.L'installation doit être conforme aux codes locaux et la dernière édition du National Code de gaz combustible, ANSI Z223.1 et peut-B149.1. Non-respect des instructions peut entraîner des blessures graves ou des dommages matériels. L'organisme qualifié effectuant ce travail suppose la responsabilité de conversion au gaz.

1. Turn OFF the FT, by using the service switch installed by the contractor.

2. Open the 4 toggle latch clamps fixed to the top (2) and bottom (2) front door of the boiler and tip the door top forward. Remove the front door from the product by lifting the front door up and away from the boiler cabinet.

3. Turn OFF the GAS and WATER supply to the FT (valves are located on the plumbing pipes.)

4. Locate the Gas Inlet Pipe from the gas valve to the venturi as shown in Figure 6, and loosen the fittings at both ends of the Gas Inlet Pipe.

5. Completely unthread the brass fitting on the blower end of the Gas Inlet Pipe and then carefully swing the Gas Inlet Pipe to the left or right, just enough so that it is out of the way.

6. Remove the existing natural gas nozzle or orifice. Install the new LP (Propane) orifice. Use the new gaskets supplied with the LP conversion kit.

7. Return the Gas Inlet Pipe to its original position and tighten both fittings.

8. Locate the DIP Switches on the PCB.

(continues on next page)

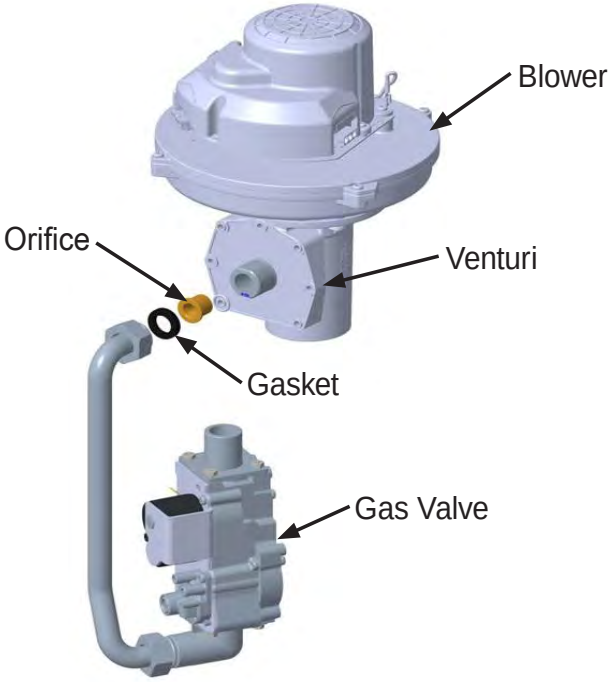

Figure 6. Location of Orifice

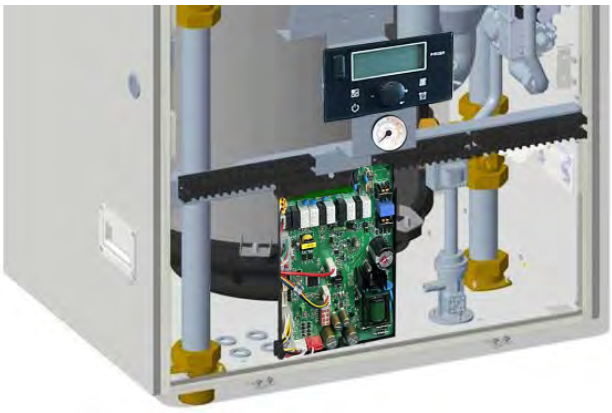

Figure 7. Location of the DIP Switches

4.15 Natural Gas to Propane Conversion (continued)

Shown is a Model 301 Natural Gas with 4” Venting.

ON	OFF
MIN Fire	Normal Operation
MAX Fire	Normal Operation
NG Natural	LP Propane

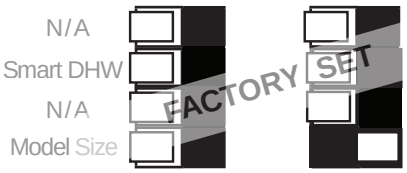

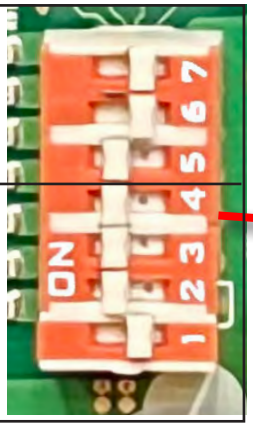

Table 16. Dip Switch #5 for Gas Type

Photo 3. PCB Control Board

*Dip Switches #6 and #7 (See Photo 3) are Maximum and Minimum fire test Switches which are used only when setting up combustion (See Section 4.13) These Switches should only be in the ON position during either High or Low fire Testing. When finished testing, ensure both of these switches are in the OFF position.

Dip Switches #1, 2 and 3 are Set at the factory and should not need adjusting.
Dip Switch defines the boiler model: #1: ON - 399, #1 OFF: 301
Dip Switch #3 is set to ON for “Smart” DHW Priority (factory default). OFF - Regular DHW Priority.
Dip Switch #4 has no function for the FT301 and FT399

When Dip Switch #3 is set to “Smart” DHW Priority, the boiler controlling DHW production can operate for space heating and DHW at the same time until its firing rate exceeds 80% firing rate. Then, the boiler shuts down its boiler pump and runs only its DHW pump. This feature reduces rapid cycling of the burner, avoids the boiler running up to high limit resulting in longer burner run times at lower firing rates and reduced thermal stress on the heat exchanger. Once the firing rate drops below 50%, the control system turns on the boiler pump again, provided the CH call is still present and the boiler temperature does not exceed the desired CH temperature range.

9. Per Table 16, set DIP Switch 5 to OFF for LP Propane.

10. Turn ON the GAS and WATER supply to the FT

11. Now start the unit and adjust combustion as described in 4.13 on page 34

12. Upon completion of set up, write in the correct Conversion Date and the Technicians Name to the included gas conversion sticker. See Figure 8. Then apply that sticker adjacent to the rating plate.

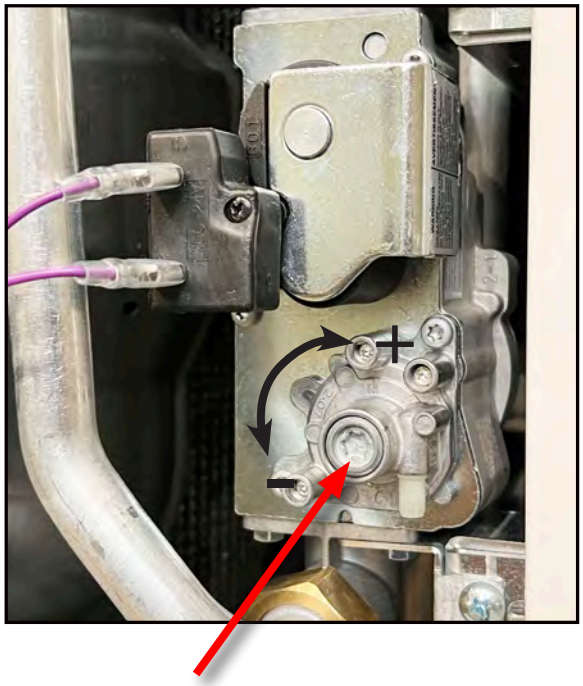

Photo 4. Gas Valve Adjustment Port

NOTE: Installer is required to verify combustion settings as part of the installation process.
CO should not exceed 200 ppm.

CO_2 Value		Natural Gas (NG)		Propane Gas (LP)	
		3″ Vent	4″ Vent	3″ Vent	4″ Vent
FTHW301/399 (all altitudes)	Max Fire	8.5 - 10.5%		9.5 - 11%	
	Min Fire	8 - 10%		9 - 10.5 %	

Manifold Pressure		**Natural Gas**		**Liquid Propane**	
		3” VENT	4” VENT	3” VENT	4” VENT
FTHW301	Max Fire	-0.28” WC	-0.28” WC	-0.28” WC	-0.28” WC
	Min Fire	-0.015” WC	-0.015” WC	-0.015” WC	-0.015” WC
FTHW399	Max Fire	-0.48” WC	-0.48” WC	-0.48” WC	-0.48” WC
	Min Fire	-0.015” WC	-0.015” WC	-0.015” WC	-0.015” WC

Table 17. Manifold Pressure at Hi Fire & Low Fire

NOTE: Values in the range of -.01 to -.50 Inches WC are indicative of proper set-up. If your values are outside this range, call technical support.

This unit was converted on ____/____/___to _____gas
with kit #_____by_____
(name and company _____
accountable)_____
_____
Cette unité a été converti ____/____/____ten _____gaz
en utilisant le kit numéro _____ par_____
(nom et société_____
responsable)_____
_____

Figure 8. Conversion Sticker

4.16 Plumbing and Wiring Guidelines

This Section will show the basic plumbing diagrams AND also the electrical connections for three (3) common installation configurations.

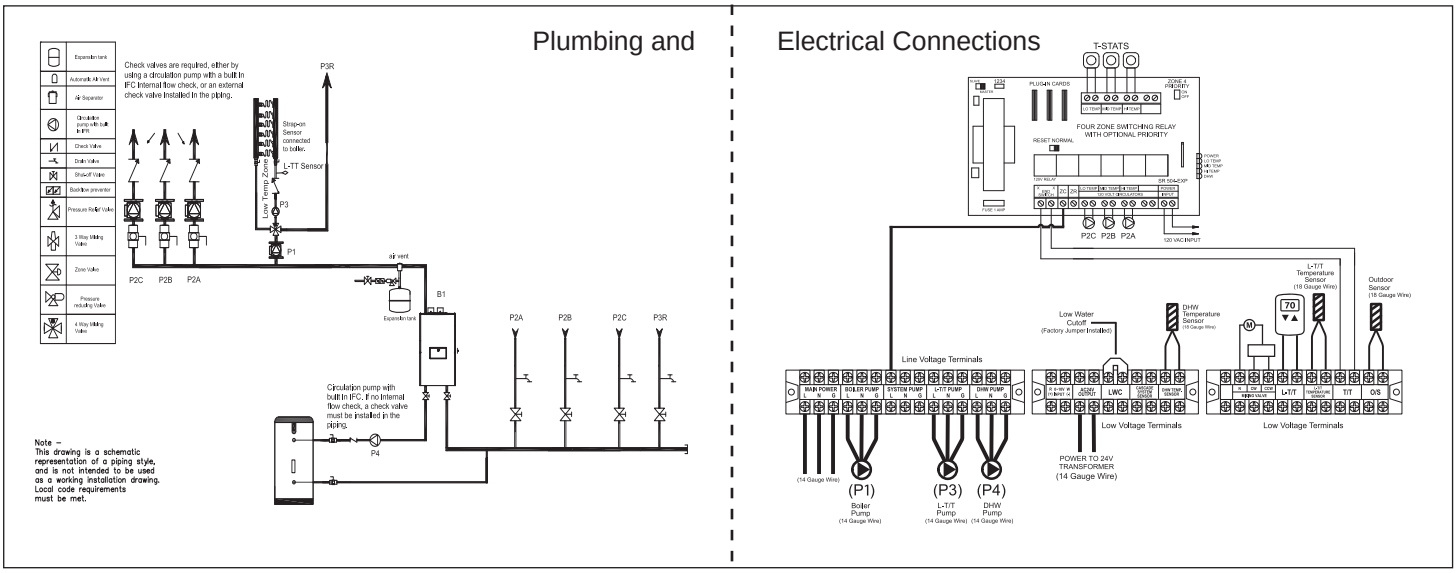

	Expansion tank
	Automatic Air Vent
	Air Separator
	Circulation pump with built in IFR
	Check Valve
	Drain Valve
	Shut-off Valve
	Backflow preventer

	Pressure Relief Valve
	3 Way Mixing Valve
	Zone Valve
	Pressure reducing Valve
	4 Way Mixing Valve

Piping diagrams will have a legend. And the electrical connections will show the devices.

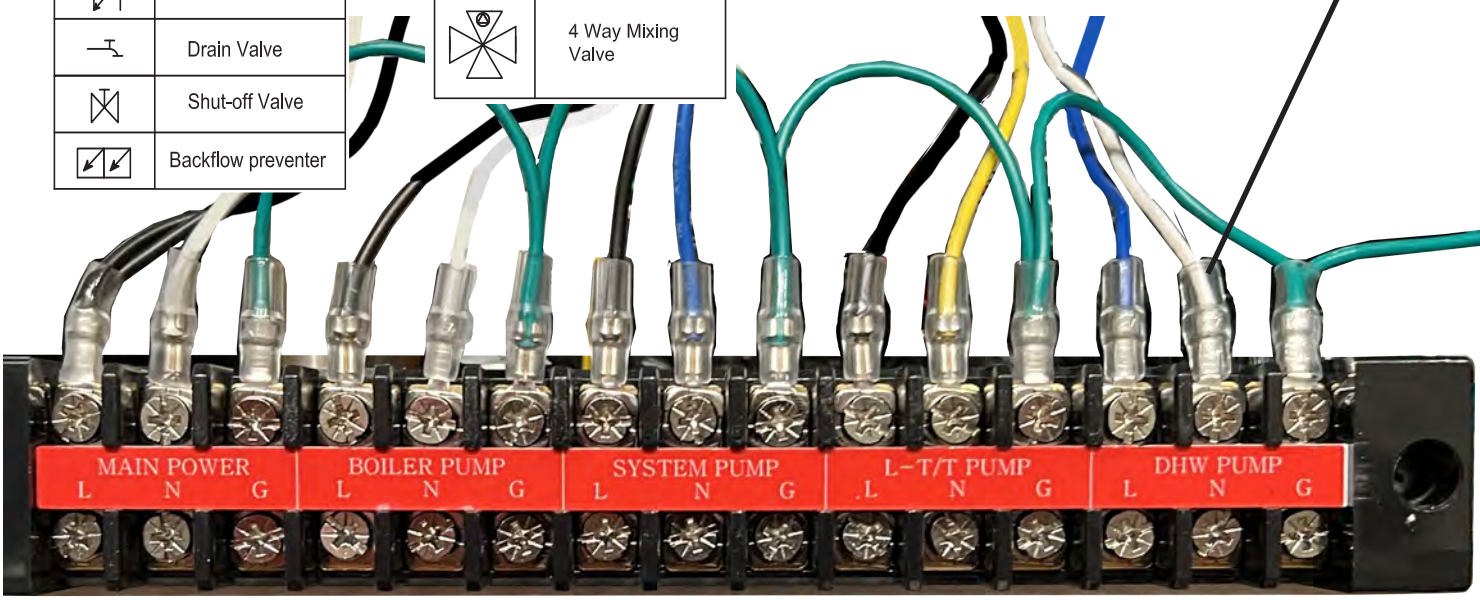

Photo 5. 120 VAC Input & Pump Power Terminal Block

***Note:** Do NOT connect 24 V to the T/T, L-T/T , L-T/T Sensor or DHW Sensor terminals. Only connect a dry contact closure to these terminals.

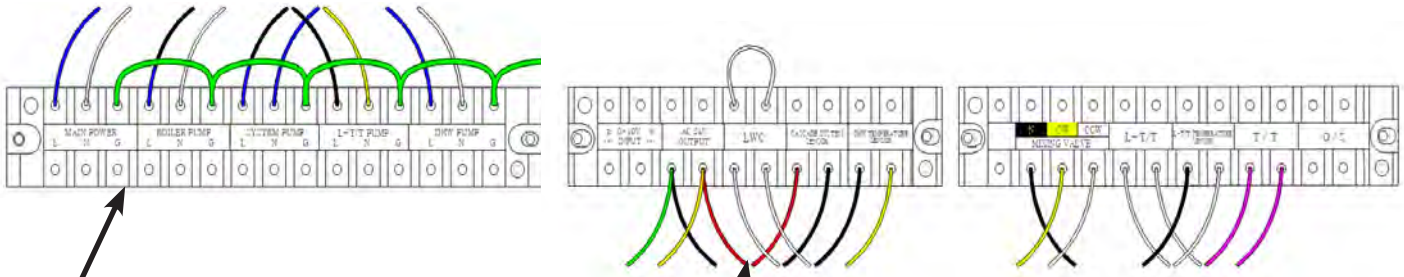

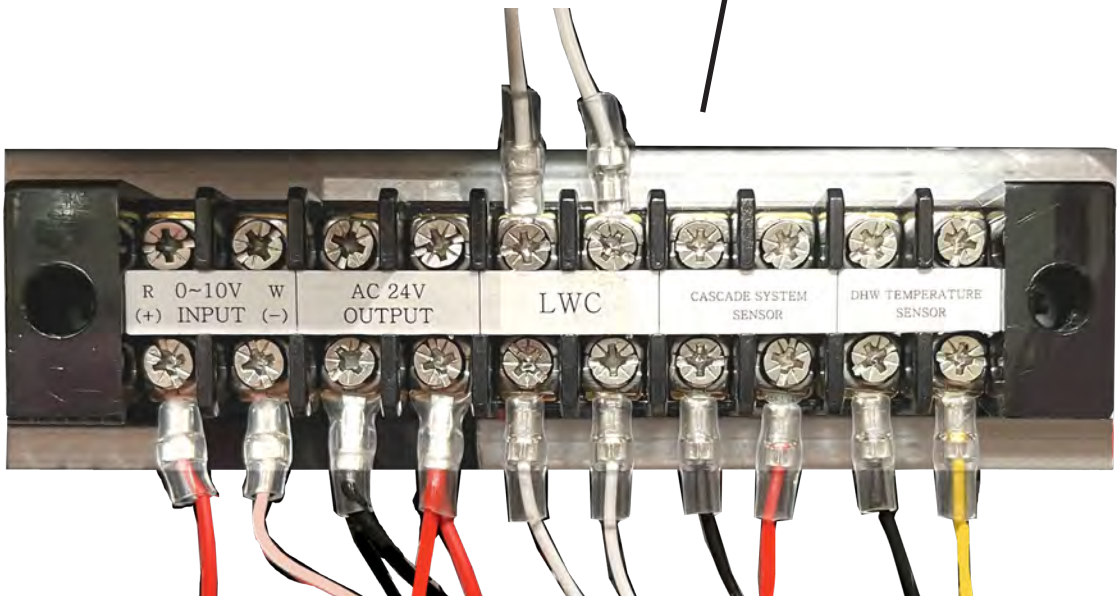

Photo 6. Low Voltage

Photo 7. Low Voltage, Sensors

4.16.1 Single wall-mounted boiler with DHW heating and high and low temperature zones w/ 24 V motorized mixing valve.

4.16.1.a Plumbing

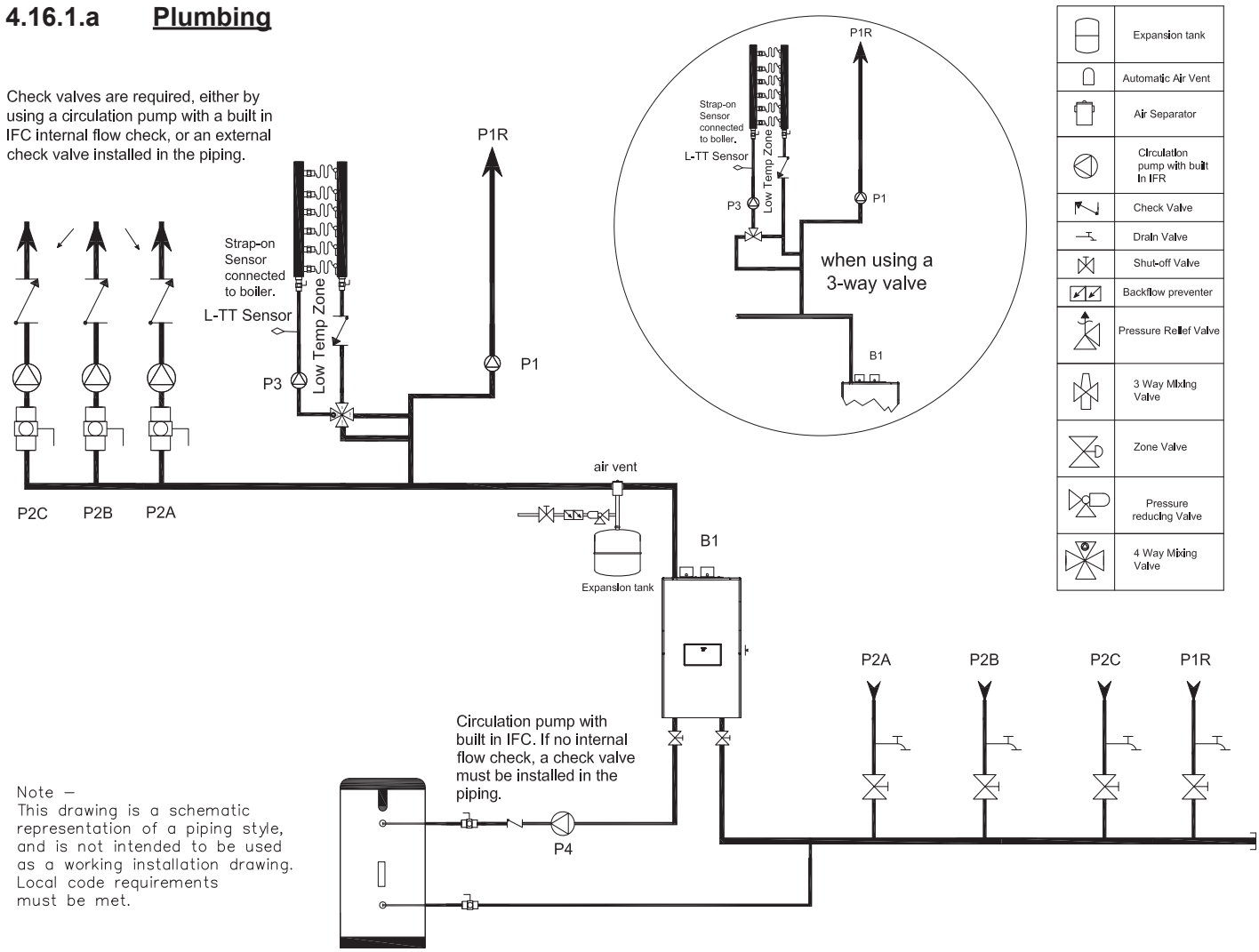

1. This piping diagram is meant to show system piping concept only. Installer is responsible for all equipment and detailing required by local codes.

2. The minimum size of the piping to the Indirect Tank Heat Exchanger is ¾" inside diameter.

3. Install a minimum of 12 diameters of straight pipe upstream of all circulators.

4. Manufacturer strongly recommends the use of an anti-scald mixing valve at the domestic hot water (DHW) outlet from the Indirect Tank to reduce potential for scalding. Check with local codes.

5. The FTHW boiler has two heating zone inputs. Two independent heating curves may be programmed for each input. Parameters P6, P7 and P40, P41 are used to adjust the heating curves for T/T and L-T/T respectively. The FTHW boiler will provide the appropriate temperature based upon which zone is calling. If both zones are calling for heat, the FTHW boiler will default to the target temperature set for the T/T zone. The L-T/T zone is designed for a lower operating temperature. The FTHW can control a 24 V mixing valve motor and has a mixed temp sensor input/ Each of the two inputs (T/T and L-T/T) have corresponding pump relays. Ensure pumps are wired to the corresponding 120V output terminals. Turn P42 (MI) to ON to enable 24 V mixing valve operation.

6. The DHW zone will have priority over the CH and L-CH zones.

4.16.1.b <u>Wiring,</u> Single wall-mounted boiler with DHW heating and high and low temperature zones w/ motorized mixing valve.

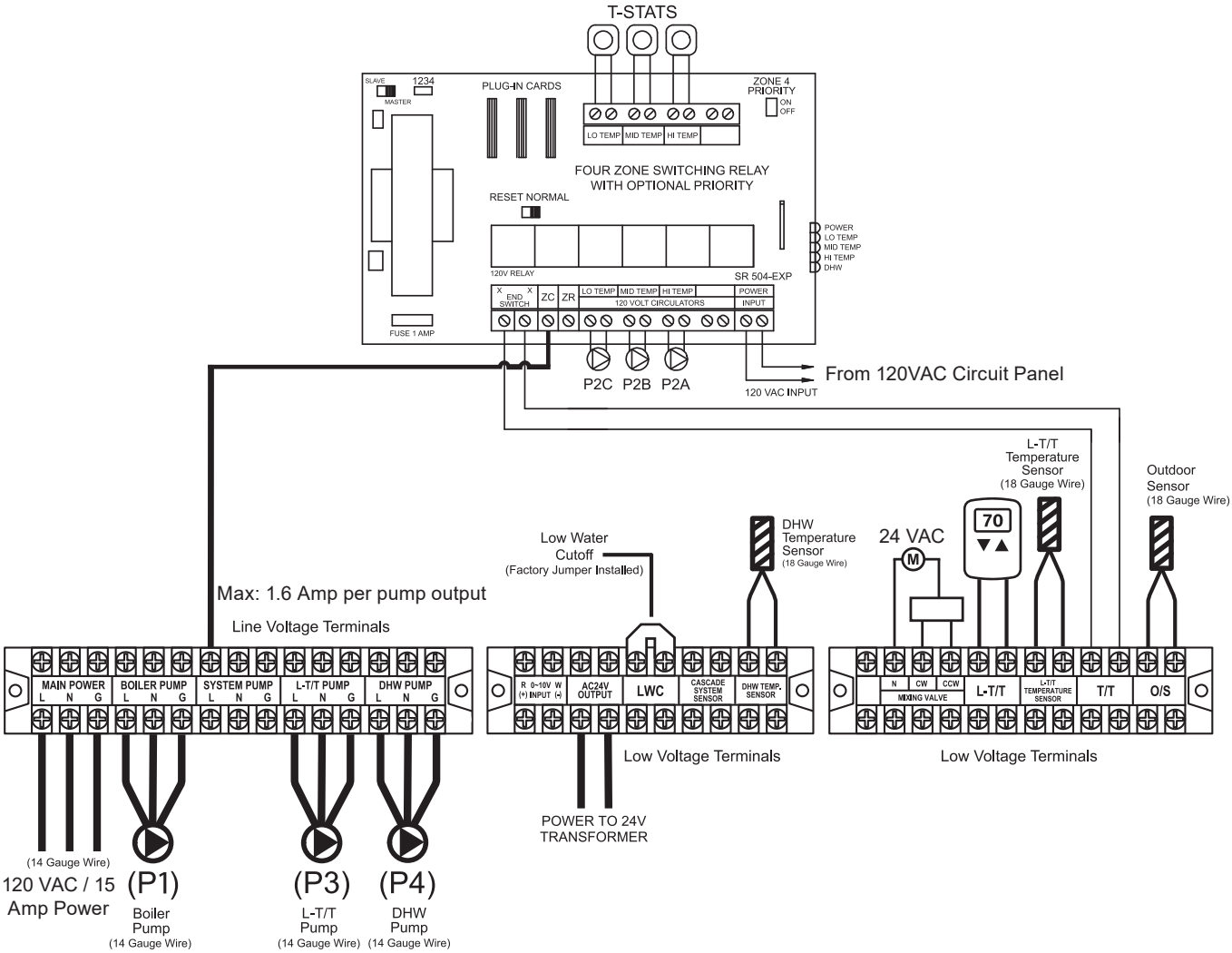

1. Do not bring 24 V to any terminals on the FTHW boiler. Calls for heat (either thermostat or end switch calls) must be dry contacts and should wire to the appropriate terminals.

2. Wire the Indirect tank sensor or aquastat to the DHW Temp Sensor terminals. Use parameter 39 in Section 5.7 on page 64 to define the input type (Aquastat or Resistance Sensor)

3. Connect the low and high temp heating pumps, DHW pump and mixing valve controls to the proper terminals.

4. Connect the outdoor sensor (OS) for outdoor reset operation to the O/S terminals. Strap on the mixed temp sensor for the low temp zone downstream of the mixing valve (10 pipe diameters away) and insulate the sensor and pipe.

5. Connect the ZC terminal from the relay panel back to the L/ZC terminal on the FTHW boiler. Make sure to remove the factory jumper from ZC to ZR on the relay panel. Set dip switch #3 to OFF for regular DHW priority.

6. The FTHW boiler has two heating zone inputs. Two independent heating curves may be programmed for each input. Parameters P6, P7 and P40, P41 are used to adjust the heating curves for T/T and L-T/T respectively. The FTHW boiler will provide the appropriate temperature based upon which zone is calling. If both zones are calling for heat, the FTHW boiler will default to the target temperature set for the T/T zone. If the L-T/T zone is designed for a lower operating temperature, a 24 V mixing valve actuator is controlled by the boiler. See parameter P42 to activate this functionality. (See Section 5.7). Each of the two inputs (T/T and L-T/T) have corresponding pump relays. Ensure pumps are wired to the corresponding 120V output terminals.

4.16.2 Floor stand application: Zoning with zone valves and indirect DHW tank pump.

4.16.2.a <u>Plumbing</u>

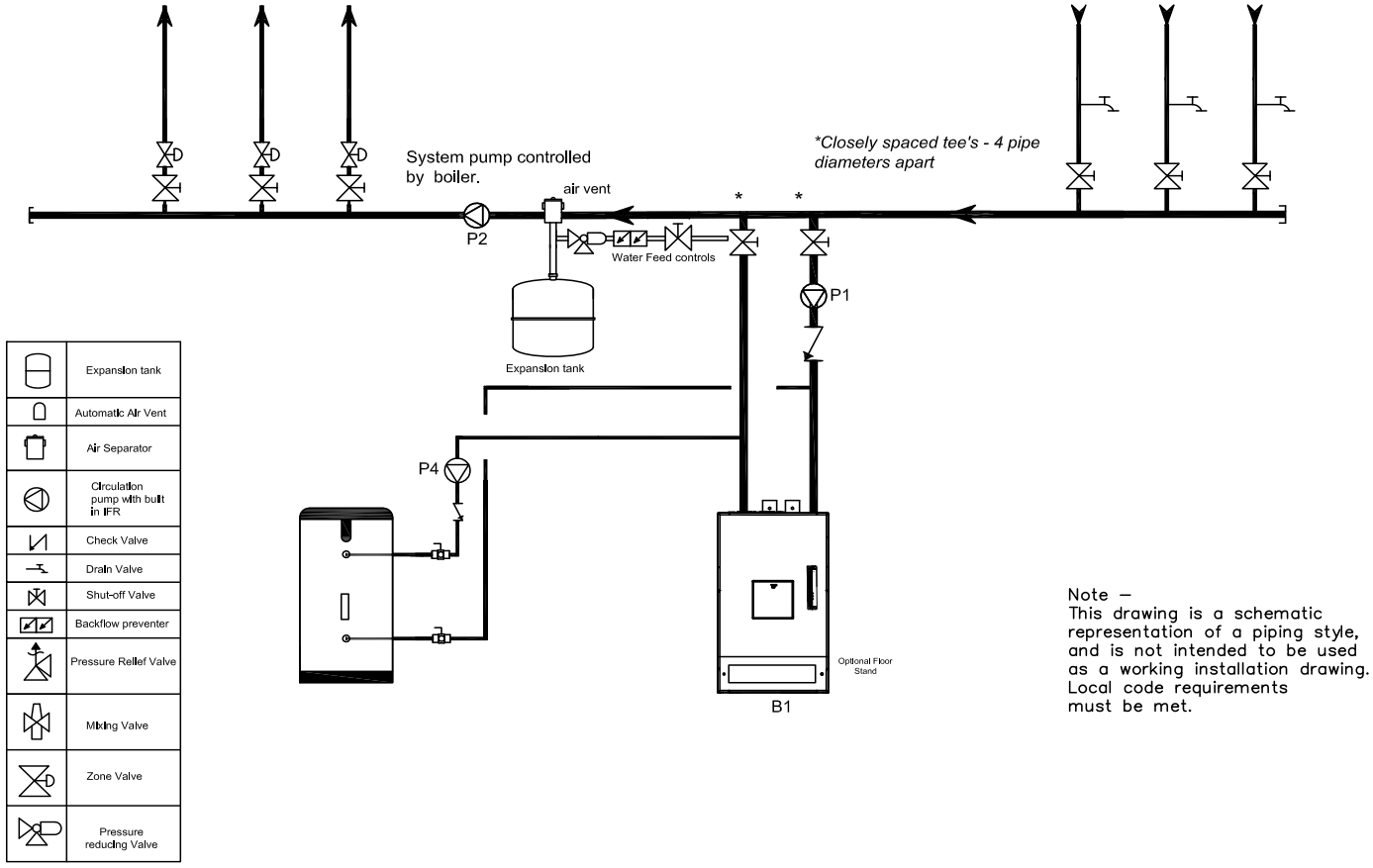

1. This piping diagram is meant to show system piping concept only. Installer is responsible for all equipment and detailing required by local codes.

2. The heat exchanger in the Indirect Tank (by others) is piped as a separate zone. The indirect pump must be sized for the combined pressure drop the FTHW boiler and coil size pressure drop.

3. Install a minimum of 12 diameters of straight pipe upstream of all circulators.

4. Manufacturer strongly recommends the use of an anti-scald mixing valve at the hot water outlet of the Indirect Tank to reduce the potential for scalding. Check with local codes.

5. The tank aquastat or DHW sensor connects back to the DHW sensor terminals. Use parameter 39 in Section 5.7 on page 64 to define aquastat (default) or DHW sensor setting to the boiler.

6. Connect the Outdoor Sensor (OS) for outdoor reset operation to the O/S terminals.

7. In case “Smart” Priority is enabled by setting dip switch #3 to ON, the boiler pump P1 can operate during a DHW call. As the firing rate exceeds 80%, the control shuts down P1 while P4 continues to operate. This feature reduces rapid burner cycling and allows more gradual heat-up of the boiler. P1 turns ON again once the firing rate drops below 50%.

Important note: The DHW Pump P4 must be sized for the DHW Indirect require flow rate and Total Head Loss through the DHW Indirect coil, piping and boiler head loss.

4.16.2.b Wiring with zone valves and indirect DHW tank

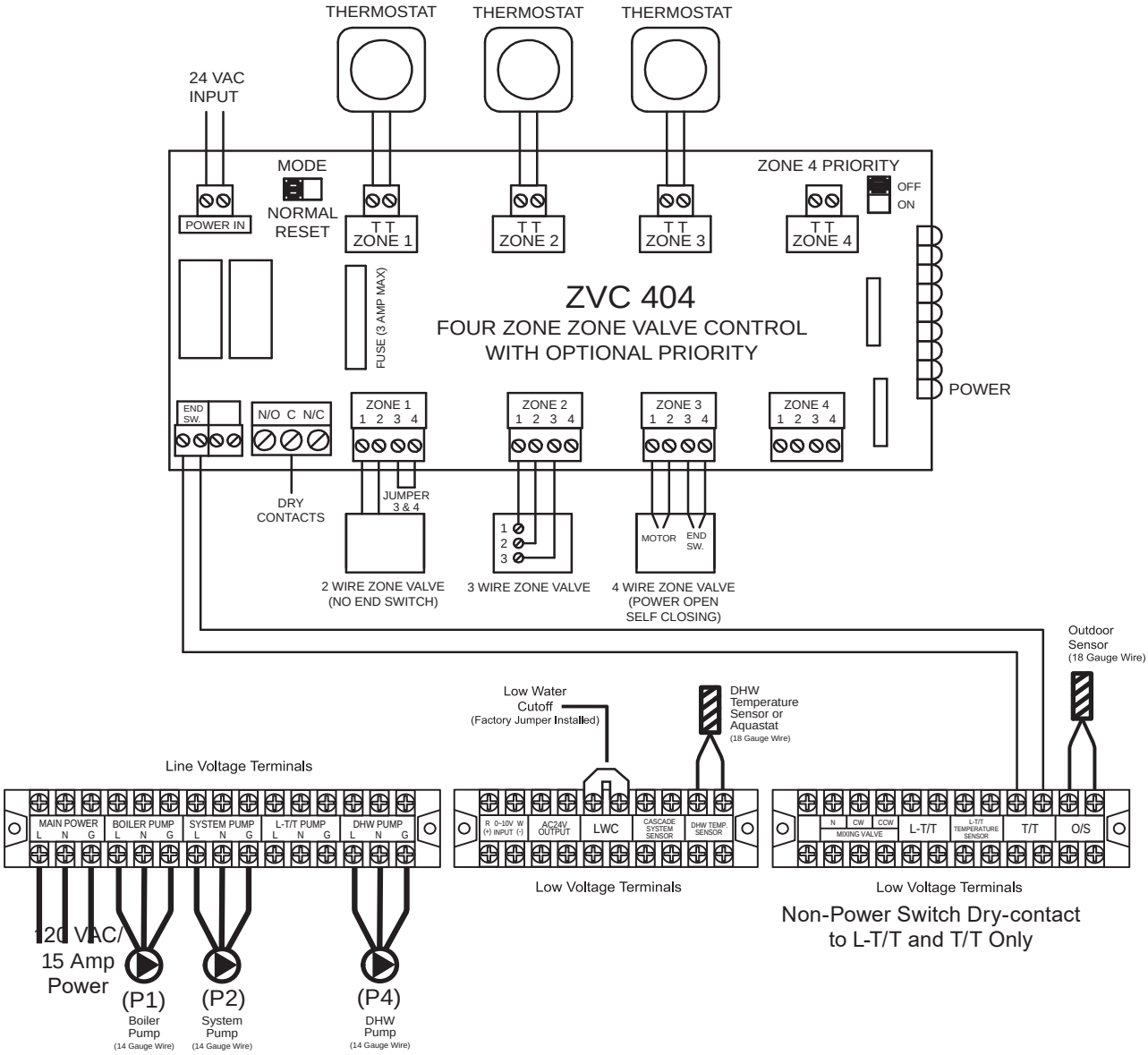

1. The traditional Taco SR-504 zone switching relay panel was used for illustrative purposes; other, similar zone relay panels may be used. The relay panel does not require hot water priority because it is provided by the FTHW boiler control. Modern zone switching relay panels with 2 end switches can be wired directly to the T-T and DHW terminals without a ZC connection. End switches must be dry contacts only. Refer to item 7 below for proper set-up of parameter P39.
2. Connect the end switch from the high temperature zone relay panel back to the T/T terminals on the FTHW boiler.
3. Do not bring 24 V back to the T/T, L-T/T and DHW terminals. Only a dry contact switch is permitted.
4. Connect all heating zone circulators to the relay panel as indicated.
5. Connect the outdoor sensor (OS) to the OS terminals on the lead boiler.
6. The tank aquastSection 5.7 on page 64 sensor connects back to the DHW sensor terminals of 1 or 2 follower boilers. Use parameter 39 in Section 5.7 to define aquastat or DHW sensor setting to the boiler.
7. A call for DHW has priority over the T/T and L-T/T calls and the Follower boilers will ramp up to high temperature for DHW production. The lead and other Follower boilers (except for DHW boilers) will continue to operate for space heating. If Smart Priority is selected for boiler 2 and/or 3, those boilers will continue to operate their individual boiler pump (P1) during a DHW call until boiler firing rate exceeds 80%. Boiler pump(s) come on again once the firing rate drops below 50%.
8. This system allows simultaneous space heating using outdoor reset via the lead boiler and priority DHW heating via 1 or 2 follower boilers

4.16.3 Cascade system with separate control of space heating and DHW heating.

4.16.3.a Plumbing

The DHW Pumps B2-P4 & B3-P4 must be sized for the DHW Indirect require flow rate and Total Head Loss through the DHW Indirect coil, piping, and respective Boiler B2 & B3 head loss.

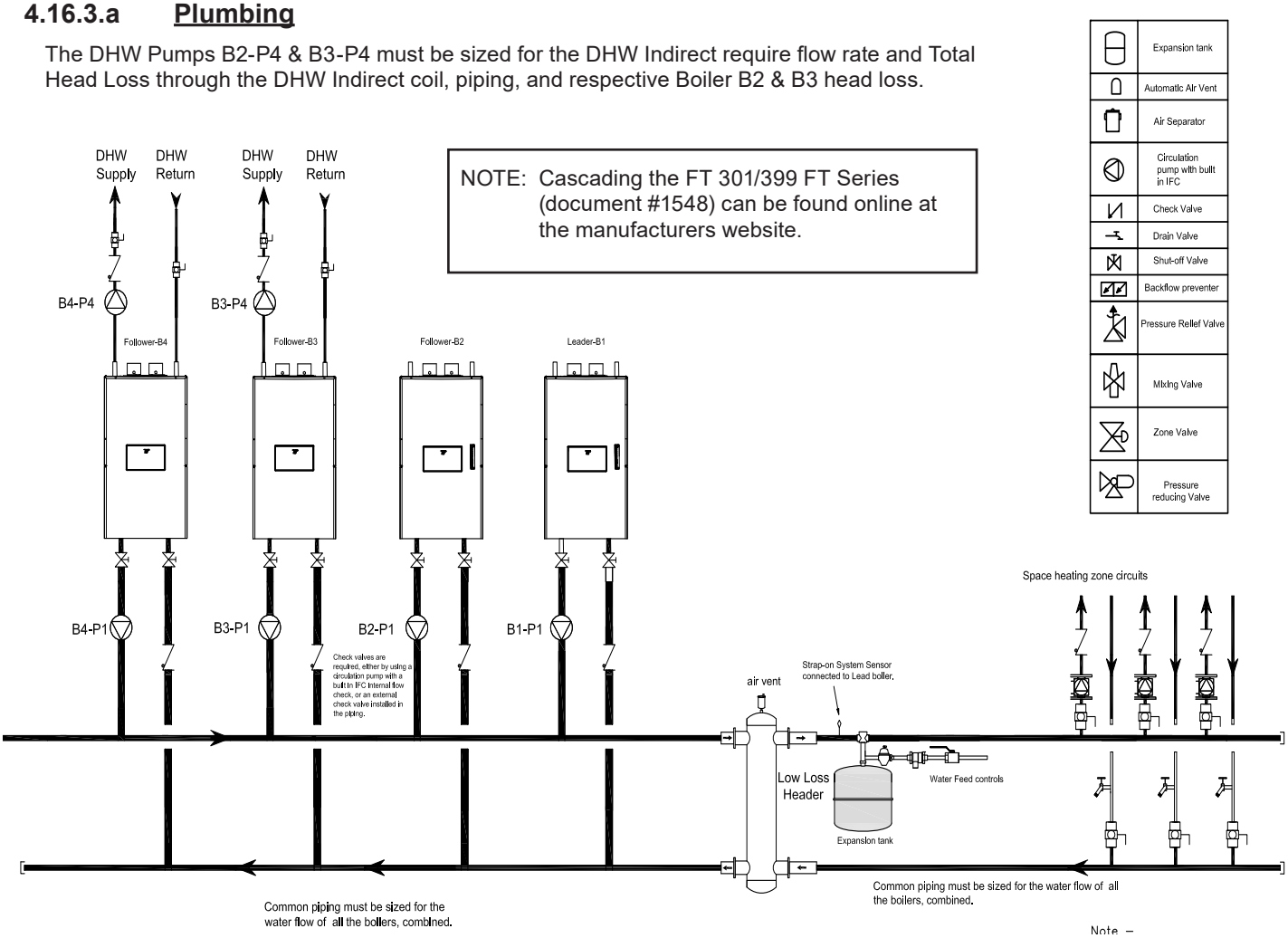

Note –

1. This piping diagram is meant to show system piping concept only. Installer is responsible for all equipment and detailing required by local codes.

2. The minimum size piping to the Indirect Tank heat exchanger is 1” to 1-1/2” inside diameter.

3. Install a minimum of 12 diameters of straight pipe upstream of all circulators.

4. The low loss header must be sized based on the total CH load and desired delta T on the system.

5. The lead boiler must be placed on the right; the cascade sensor must be placed on the system size of the low loss header.

6. The heat exchanger in the Indirect Tank shall be piped as a separate zone to one or both follower boilers. A DHW load is a boiler direct demand. Power the pump for the indirect tank from the DHW tank terminals. The (dry contact) aquastat or DHW sensor connects back to the DHW sensor terminals of the boiler. (See parameter 39, Section 5.7 on page 64 for proper programming of DHW sensor or aquastat).

7. Manufacturer strongly recommends the use of an anti-scald mixing valve at the hot water outlet of the Indirect Tank to reduce the potential for scalding. Check with local codes.

8. In case “Smart” Priority is enabled by setting dip switch #3 to ON (Default) on boilers B2 and B3, their respective boiler pump P1 can operate during a DHW call. As each boiler’ firing rate exceeds 80%, the control shuts down P1 while P4 continues to operate. This feature reduces rapid burner cycling and more gradual heat-up of the boiler. This feature works individually for each boiler connected to a DHW load and allows the boiler plant to provide different water temperatures at the same time. P1 turns ON again once the firing rate drops below 50%.

4.16.3.b Wiring of cascade system with separate control of space heating and DHW heating.

NOTE: Cascading the FT 301/399 FT Series (document #1548) can be found online at the manufacturers website.

Boiler Cascade Harness FT1861 wiring missing in diagram.

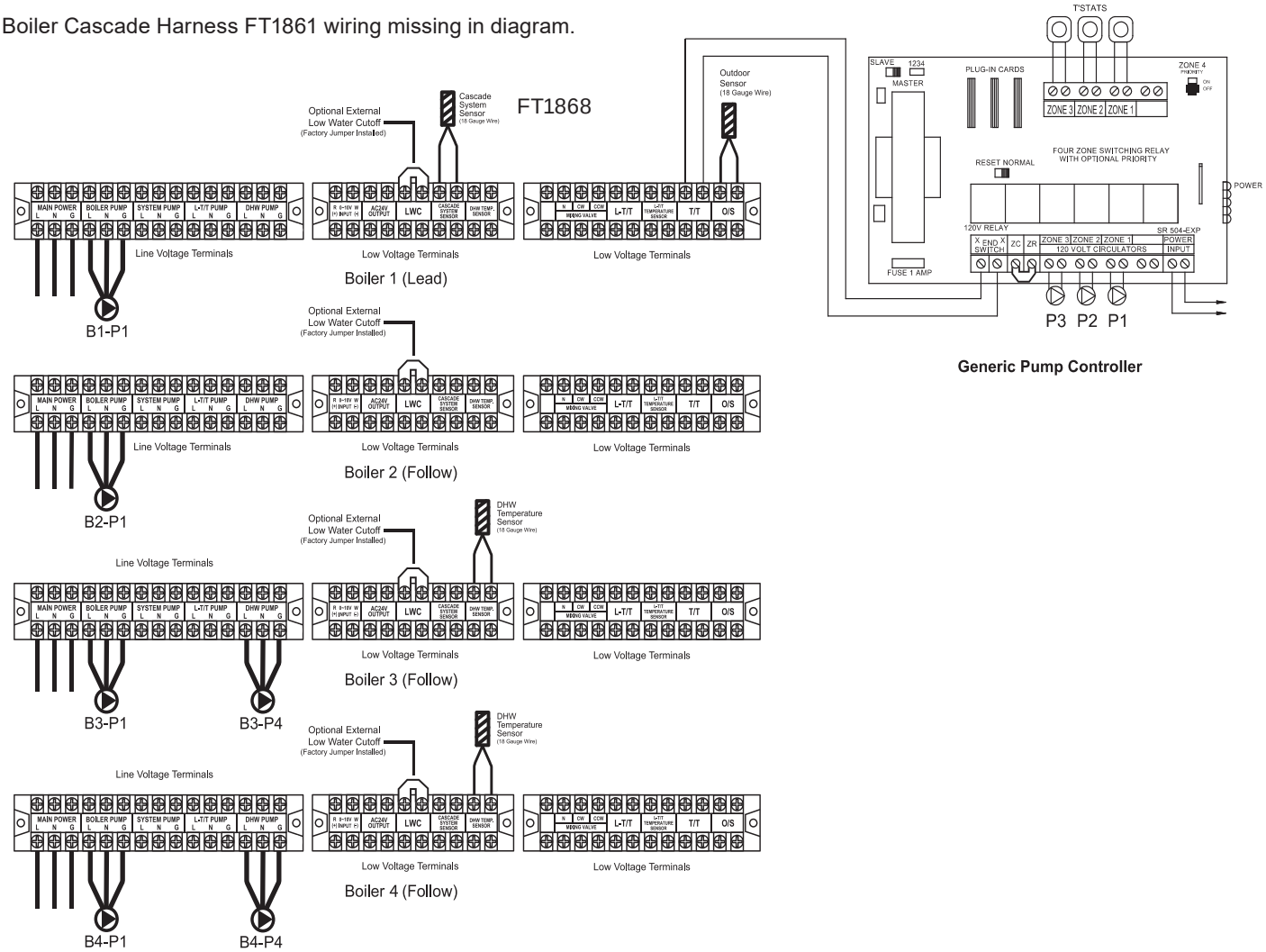

1. The traditional Taco SR-504 zone switching relay panel was used for illustrative purposes; other, similar zone relay panels may be used. The relay panel does not require hot water priority because it is provided by the FTHW boiler control. Modern zone switching relay panels with 2 end switches can be wired directly to the T-T and DHW terminals without a ZC connection. End switches must be dry contacts only. Refer to item 7 below for proper set-up of parameter P39.
2. Connect the end switch from the high temperature zone relay panel back to the T/T terminals on the FTHW boiler.
3. Do not bring 24 V back to the T/T, L-T/T and DHW terminals. Only a dry contact switch is permitted.
4. Connect all heating zone circulators to the relay panel as indicated.
5. Connect the outdoor sensor (OS) to the OS terminals on the lead boiler.
6. The tank aquastat or DHW sensor connects back to the DHW sensor terminals of 1 or 2 follower boilers. Use parameter 39 in Section 5.7 on page 64 to define aquastat or DHW sensor setting to the boiler.
7. A call for DHW has priority over the T/T and L-T/T calls and the Follower boilers will ramp up to high temperature for DHW production. The lead and other Follower boilers (except for DHW boilers) will continue to operate for space heating. If Smart Priority is selected for boiler 2 and/or 3, those boilers will continue to operate their individual boiler pump (P1) during a DHW call until boiler firing rate exceeds 80%. Boiler pump(s) come on again once the firing rate drops below 50%.
8. This system allows simultaneous space heating using outdoor reset via the lead boiler and priority DHW heating via 1 or 2 follower boilers

- Ensure pipe material meets local codes and industry standards.

- The pipe end must be clean and free of debris.

- Do not apply torch heat within 12″ of the top connections of the unit.

- The Boiler supply and return connections are 1-1/2” NPT. System piping should be sized based on your design load and flow requirements. Refer to sections 4.16.4 through 4.16.8 for details.

- Isolation valves (shutoff valve) should be used.

- All piping should be insulated.

4.17 Applicable Backflow Preventer

- Apply a backflow preventer valve in the DHW supply inlet (water Inlet) to the system as required by local codes.

4.18 Hydronic Accessories and Water side Pressure Drop.

- The air in a diaphragm-type expansion tank is separated from the water by a flexible rubber membrane. When the tank is installed in and connected to the piping of the system, water enters the other side of the tank chamber and presses down on the diaphragm.

- You should always install an ‘Automatic Air Vent on the top of the air separator to remove residual air from the system.

- Install the supplied brass adaptor, automatic air vent and relief valve on the top front left piping connection.

- One can use the 1-1/2” threaded outlet connection of the brass adaptor for a supply connection or cap this connection with the 1-1/2” cap provided.

- If an external LWCO or externally manual reset high limit is required/ desired, the horizontal body of the brass adaptor fitting has a 3/4” connection for a remote LWCO or manual reset high limit aquastat.

⚠ CAUTION

- The FTHW301/399 boiler is equipped with top and bottom water connections. Return connections are located on the right side; supply connections are located on the left side of the boiler. One must use 1 return and 1 supply connection, or one can use more than 1 depending on your application. Refer to the 4.16 for typical piping and wiring scenarios.

- CH pipe size : Two 1-1/2” female NPT caps are provided to close off unused water connections. One cap has a 3/4” threaded opening for a plug (furnished) or boiler drain (not furnished). In case top connections are used, a boiler drain can be installed in this cap at the bottom right water connection or use the 3/4” plug.

⚠ CAUTION

For guidelines in the use of Glycol Products. Please refer to Section 9.3 on page 82

⚠ CAUTION

Scalding Risk: Manufacturer strongly recommends the installation of an anti-scald mixing valve at domestic hot water outlet (indirect tank location) to reduce potential for scalding.

Check with local codes

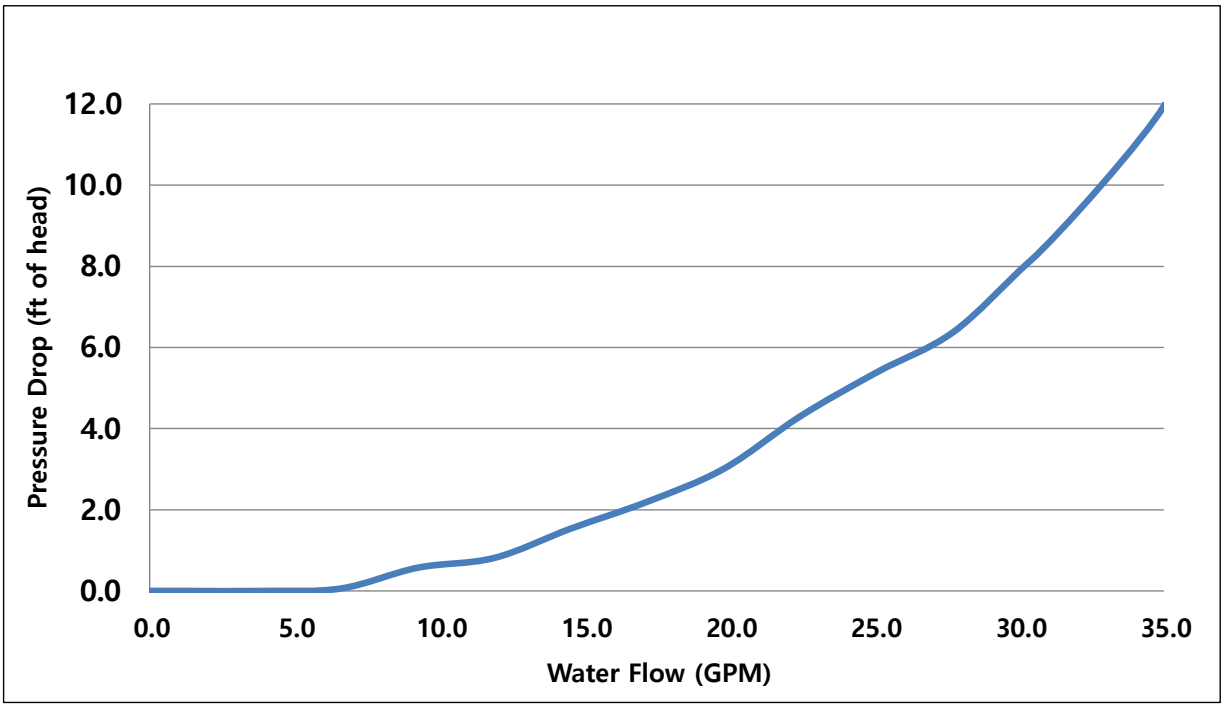

Figure 9. Water side pressure drop versus water flowrate for FT301 and FT399 Models

4.19 Boiler pump (P1) selection for primary/secondary piping

NOTE: Pipe size is 2" for boiler pump selection and 30 ft of pipe.

Model	Delta T = 20F	Delta T = 25F	Delta T = 30F	Delta T = 40F
301	TACO 0012	N/A	TACO 0010	TACO 008
399	N/A	TACO 0012	TACO 0012	TACO 0010

Table 18. Taco Circulators

Model	Delta T = 20F	Delta T = 25F	Delta T = 30F	Delta T = 40F
301	PL-36	PL-30	PL-30	NRF-25
399	N/A	PL-45	PL-36	PL-30

Table 19. B&G Circulators

Model	Delta T = 20F	Delta T = 30F	Delta T = 40F
301	N/A	UPS15-15 SP-3	UPS15-15 SP-2
399	N/A	UPS43-44	UPS15-15 SP-3

Table 20. Grundfos Circulators

Indirect pump (P4) selection based on Commercial type Indirects.

Model	TACO Pump	Grundfos Pump	B&G Pump
65 Gallon	TACO 0012	UPS43-44	PL-30
80 Gallon	TACO 0012	UPS43-44	PL-30
120 Gallon	TACO 0012	UPS43-44	PL-30

Table 21. Commercial Type Indirects

NOTE: Pipe size is based on 1" for indirects with 10 ft of pipe.

4.20 Pressure Relief Valve

- External pressure relief valve must be installed. Observe the following. Failure to comply with the guidelines on installing the pressure relief valve and discharge piping can result in personal injury, death or substantial property damage.

> ⚠ WARNING
>
> Do not operate this appliance before the pressure relief valve supplied is installed with sufficient relieving capacity in accordance with the ASME Rating Plate on the boiler.

- A special brass adaptor, air eliminator and relief valve are supplied in the accessory box. Install this fitting on the top left 1-1/2" NPT connection as shown here.
- This safety relief valve (30 psi) is shipped loose for field installation.
- Install the air eliminator and relief valve as shown.
- For safety, the relief valve must be installed into its designated location and not be removed or plugged. Failure to comply with the guidelines on installing the pressure relief valves and discharge piping can result in personal injury, death or substantial property damage.
- Direct the discharge piping of the pressure relief valve to a nearby floor drain so that hot water will not splash on anyone or any nearby equipment. Attach the hard piped copper discharge line to the pressure relief valve and run the end of the full port line within 6-12″ (150 - 300mm) of the floor.
- A separate external LWCO can be installed by removing the 3/4" plug on the brass adaptor to install the LWCO.

> ⚠ WARNING
>
> DO NOT install a CH pipe line relief valve with a pressure higher than 50 psi. This is the maximum allowable relief valve setting for the boiler.

- Test the operation of the valve after filling and pressurizing system by lifting the lever. Make sure the valve discharges freely. If the valve fails to operate correctly, replace it with a new relief valve. Ensure that the discharge capacity of the replacement pressure relief valve is equal to or greater than the maximum input rating of the boiler.

- This appliance has a high-temperature shut off switch built in as a standard safety feature. Therefore a "pressure only" relief valve is required.

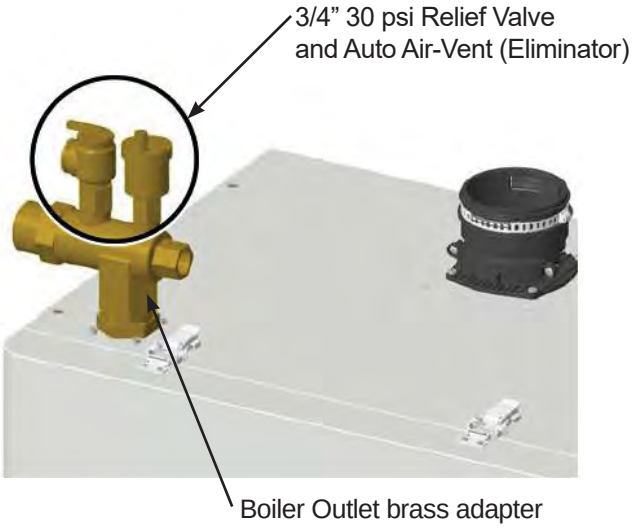

> ⚠ **CAUTION**
>
> The included Pressure Relief Valve (PRV) must be installed immediately at the brass adaptor, which itself must be installed at the top of the boiler outlet, without any valves in between.
>
> ⚠ **ATTENTION**
>
> PVR (inclus) doit etre installe sur l'adapture de brass immediate a la sortie de la chaudière. On doit pas install un vane entre le PVR et la chaudière.

4.21 Disposal of Condensate

- High efficiency gas condensing boilers create condensation when operating. Condensation is acidic with a pH ranging from 4 to 5.
- Install the furnished condensate trap through the opening in the bottom of the boiler cabinet and secure with the screws provided.
- Attach the supplied condensate drain hose to the installed condensate trap. Make sure to attach the 1/8" air vent tube and secure this 6" long hose to a bracket so it will not spill condensate. Follow your local code with regards to the disposal of condensation.

One of 3 disposal methods must be followed

1. **to a floor drain**
2. **Combination neutralizer and condensate pump kit (optional kit Part # FT3007 available from manufacturer)**
3. **to a condensate pump (field supplied)**

- If a neutralizer is installed, periodic replacement of the lime stone (or neutralizing agent) will be required. The rate of depletion of the lime stone varies upon usage of the boiler. During the first year of operation, please check the neutralizer every few months for depletion.
- Apply only corrosion-resistant materials for the condensate drain lines such as 3/4" PVC, CPVC, Polypropylene pipe or included plastic hose.

- When placing the FT3007 kit or other suitable condensate pump/ neutralizer combination below or near the cabinet, it may be necessary with a small clip (not provided) to secure the condensate hose coming from the trap to this cover. One can also use the soft plastic insert, shorten the condensate drain hose and carefully "thread" the hose into this insert and place it into its designation location of the FT3007 kit.

- A small piece of velcro is provided to secure the condensate hose or small air tube to jacket side/rear panel.

⚠ NOTICE

Category II & IV boilers must be installed with a means provided for the drainage of condensate.

⚠ AVIS

les chaudières de catégories II et IV doivent être installées avec un moyen de drainage du condensat.

⚠ CAUTION

Condensate is mildly acidic (pH=5), and may harm some floor drains and/or pipes, particularly those that are metal. Ensure that the drain, drainpipe, and anything that will come in contact with the condensate can withstand the acidity, or neutralize the condensate before disposal. **Damage caused by failure to install a neutralizer kit or to adequately treat condensate will not be the manufacturer's responsibility.**

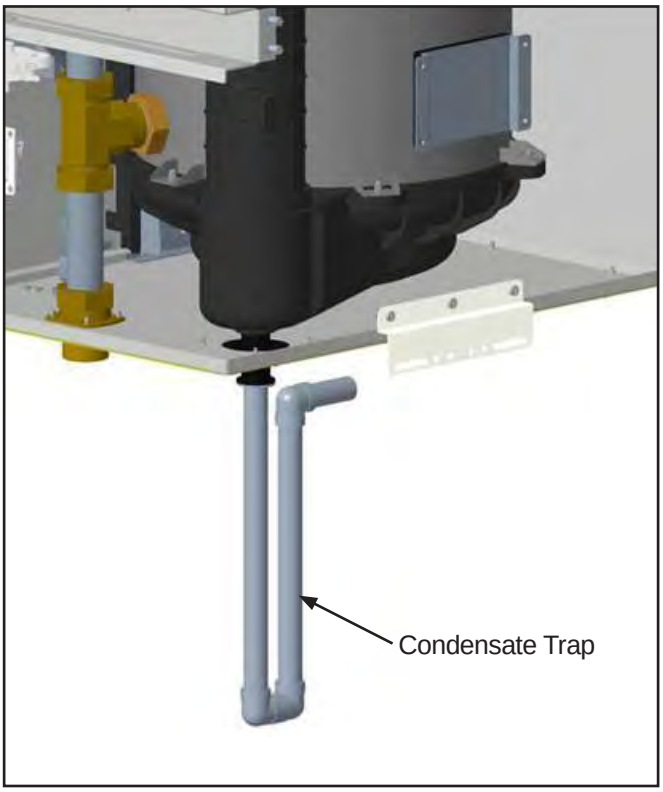

4.22 Electrical Wiring Connections

FTHW 301/399 Boiler Electrical Circuit Requirement: 120VAC, 15 Amps, Single-Phase.

120 V field wiring connects to the bottom terminals on the 120 V strip. Pump connections: Max 120 V, 1.6 Amps.

Note: For pumps over 1.6 Amps, use 120V isolation relay/starter and separate pump power circuit.

Low voltage field wiring connects to the upper terminals on the low voltage terminals.

See Section 4.16 on page 40 for typical Field Connections.

High Voltage Terminals

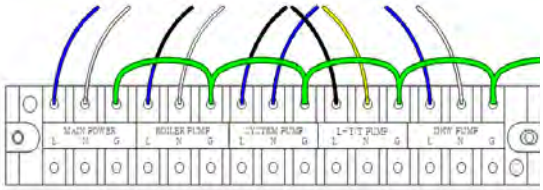

Low Voltage Terminals

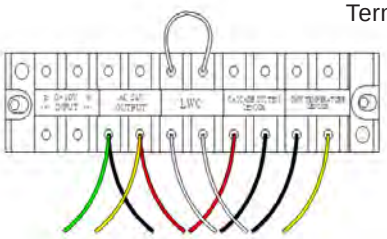

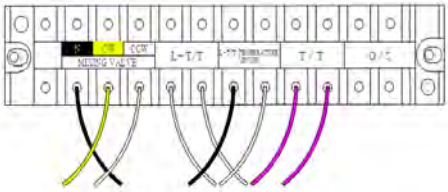

0-10 VDC Signal Input, 24 VAC Output, External LWCO, Cascade Sensor, DHW Sensor

24 VAC Mixing Valve, L-T/T, L-T/T Sensor, T/T, OS

⚠ WARNING

Install wiring and electrically ground boiler in accordance with authority having jurisdiction or, in the absence of such requirements, follow the National Electrical Code, NFPA 70, and/or CSA C22.1 Electrical Code-Part 1 in Canada.

ELECTRICAL SHOCK HAZARD — For your safety, turn off electrical power supply at service entrance panel before making any electrical connections to avoid possible electric shock hazard. Failure to do so can cause severe personal injury or death.

- This appliance must be electrically grounded. Ensure that the FT boiler is hard wired directly into a separate breaker with proper grounding. A service switch must be installed near the boiler as per local code.
- Do not attach the ground wire to either the gas or the water piping as plastic pipe or dielectric unions may isolate the boiler electrically.
- The wiring diagrams contained in this manual are for reference purposes only.
- Refer to these diagrams and diagrams from external controls used with this appliance. Read, understand, and follow all wiring instructions.
- Do not disconnect the power supply when the unit is in normal operation. Damage caused by freezing is not covered under the warranty.
- Manual(Rocker) switch maximum allowable current for each circulator is 1.6 amps at 125VAC. (Housing : Nylon #66 UL 94V-2 , Rocker : Nylon #66 UL 94V-2, Terminal : Copper Alloy)
- Terminal block (External power connector) : DFT-20A-10P (20 amps at 300VAC)

4.23 DIP Switches

The DIP Switches are located at the bottom of the Printed Circuit Board (PCB). The PCB faces forward at the inside of the boiler. Remove the cover to locate the PCB.

ON	OFF
MIN Fire	Normal Operation
MAX Fire	Normal Operation
NG Natural	LP Propane

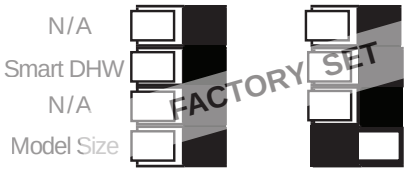

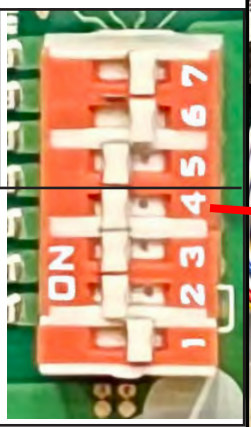

Table 22. Dip Switch Settings
Shown is a Model 301 Natural Gas with 4” Venting.

*Dip Switches #6 and #7 are Maximum and Minimum fire test Switches which are used only when setting up combustion (See Section 4.13 on page 34). These switches should only be in the ON position during either High or Low fire testing. When finished testing, ensure both of these switches are in the OFF position.

Dip Switches #1 and 2 are Set at the factory and should not need adjusting. Dip Switch #1 defines the boiler model: #1: ON - 399, #1 OFF: 301

Dip Switch #3 set to ON for "Smart" DHW Priority. OFF - Regular DHW Priority.

System Control Setting

Maximum flame detecting voltage	2.4V
Pre-purge time (Tp)	Maximum 10s, minimum 1s
Safety Time (igniting time) (Ts)	2s
Igniting interval time	10s
Post-purge time (Tip)	120S (1st : 60s + 2nd 60s)
Over-heating 1,2,3 protection detection time	<3s
Pump1 post circulating time (T1pv)	60s
Pump2 post circulating time (T1pv)	60s
High & Low Water Level detection time	<6s
High & Low Water Level Recover time	<6s

4.24 Control Board, Electrical Diagram

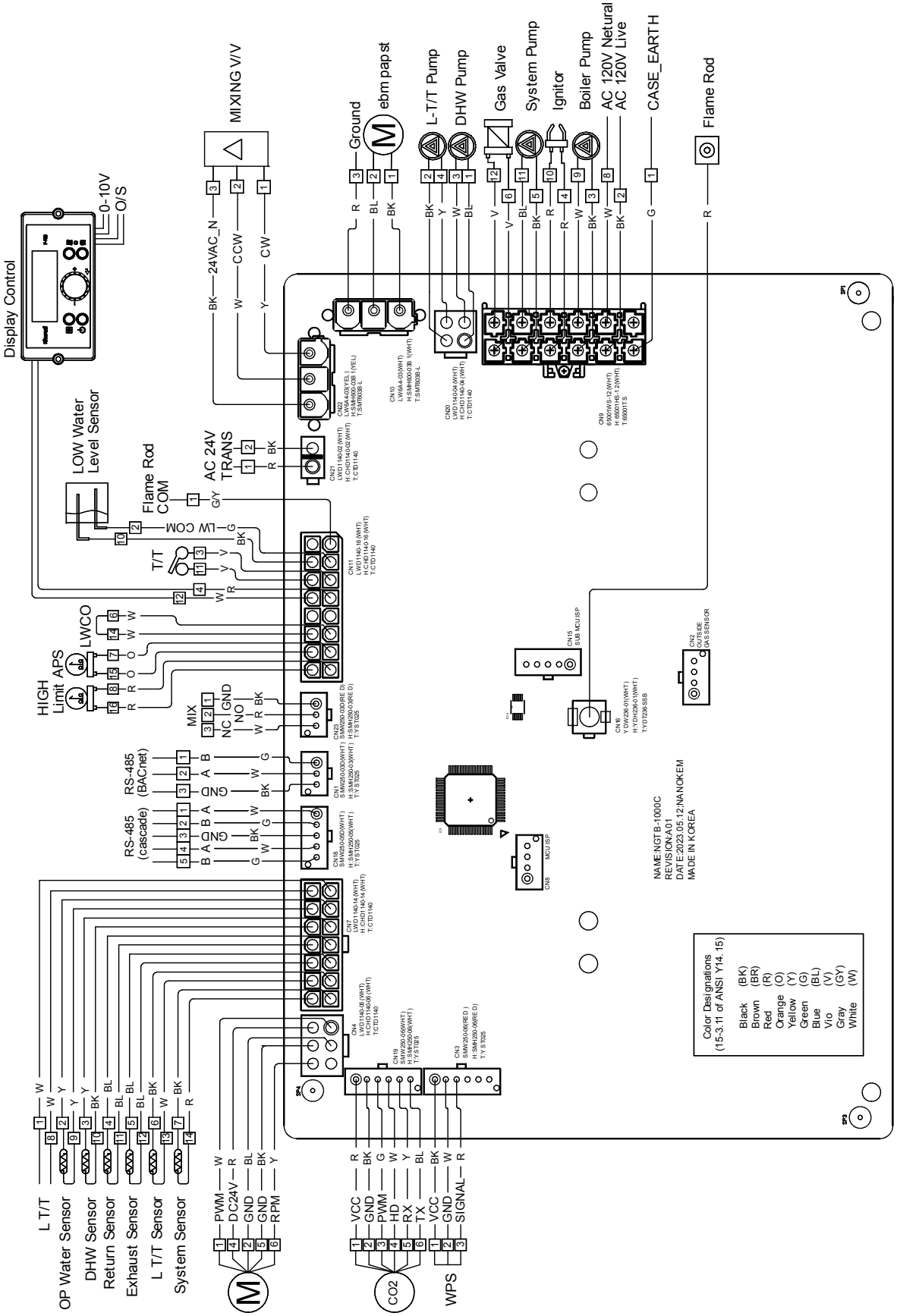

Control Board, NGTB-1000C (399 MBH)

4.25 Ladder Diagram

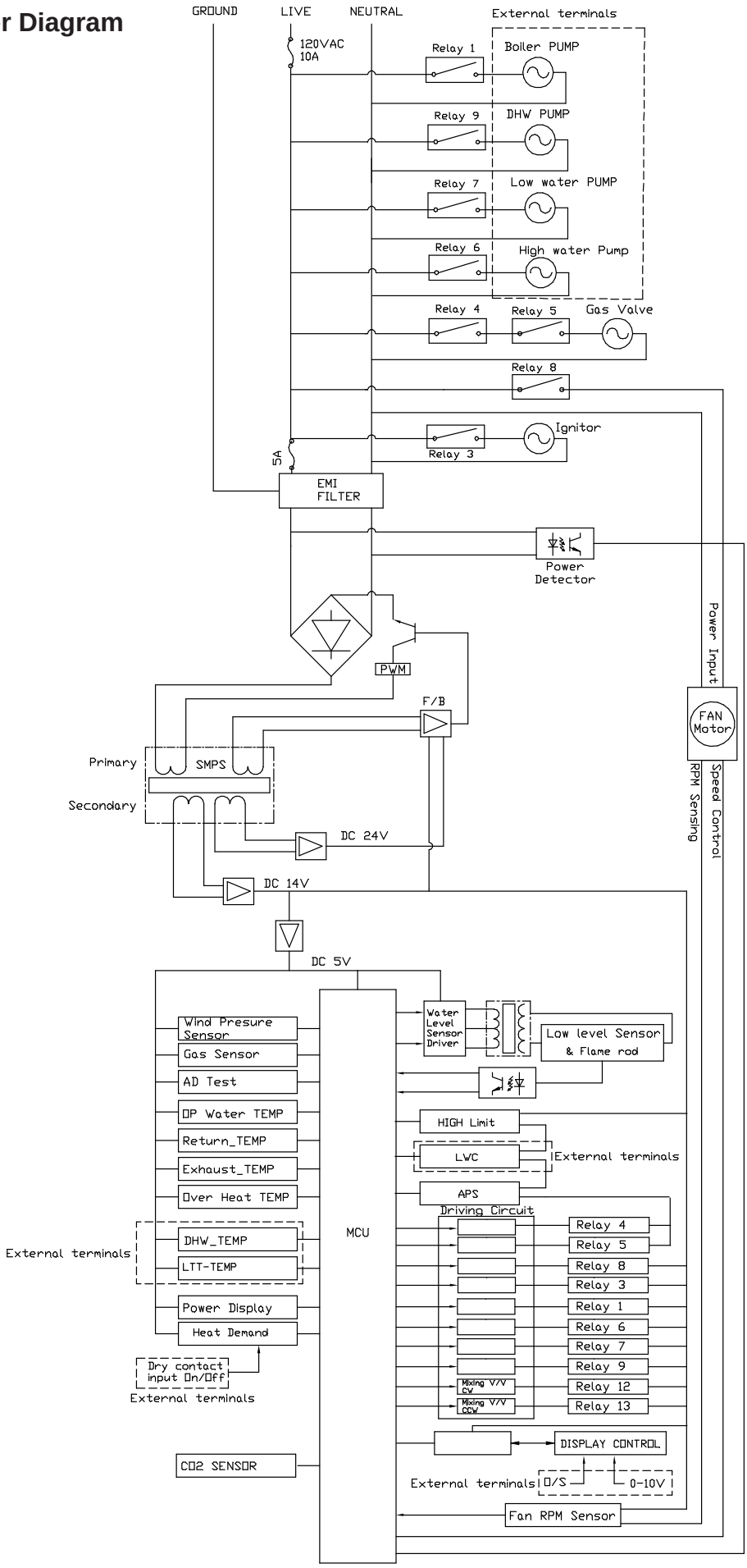

4.26 Electrical Connections, (table)

Connector			Description	HT SELV
#, Location, Type	PIN	Label		
CN1 SMW250-03D	1	RS485 (BACnet)	data (-)	
	2		data (+)	
	3		GND	
CN3 SMW250-06D	1	WPS	VCC(5V)	
	2		GND	
	3		WPS	
	4	-	-	
	5	-	-	
	6	-	-	
CN4 LWD1140-06	1	FAN MOTOR	PWM	
	2		GND	
	3		-	
	4		DC 24V	
	5		GND	
	6		RPM	
CN7 LWD1140-14	1	Temperature Sensor	L T/T	
	2		OP Water Temperature Sensor	
	3		DHW Temperature Sensor	
	4		Return Temperature Sensor	
	5		Exhaust Temperature Sensor	
	6		L T/T Temperature Sensor	
	7		System Sensor(or Over-Heat)	
	8		GND	
	9		GND	
	10		GND	
	11		GND	
	12		GND	
	13		GND	
	14		GND	
CN8 SMW250-04D	1	Flash Write	GND	
	2		Nreset	
	3		Flash Write	
	4		VCC(5V)	
CN9 65001WS-12	1	AC Output Power	Case Earth	
	2		Phase	
	3		Boiler Pump	
	4		Ignitor	
	5		System Pump	
	6		Gas Valve	
	7		Earth	
	8		Neutral	
	9		AC Boiler Pump COM	
	10		AC Ignitor COM	
	11		AC System Pump COM	
	12		AC Gas Valve COM	

Connector			Description	HT SELV
#, Location, Type	PIN	Label		
CN10 LW6A4-03	1	EBM PAPST	L	
	2		N	
	3		Earth	
CN11 LWD1140-16	1	Safety Function	Flame Rod COM	
	2		LW COM Sensor	
	3		T/T	
	4		Thermostat(+)	
	5		VCC(5V)	
	6		VCC(12V)	
	7		High Limit	
	8		VCC(12V)	
	9		High Water Level	
	10		Low Water Level	
	11		GND	
	12		Thermostat(-)	
	13		GND	
	14		LWCO	
	15		APS	
	16		High Limit	
CN16 YDW236-01P	1	Flame Rod	Flame Rod	
CN18 SMW250-05D	1	Cascade	Data(+)	
	2		Data(-)	
	3		GND	
	4		Data(+)	
	5		Data(-)	
CN19 SMW250-06D	1	CO_2 Sensor	VCC(5V)	
	2		GND	
	3		PWM	
	4		HD	
	5		RX	
	6		TX	
CN20 KWD1140-04	1	PUMP	DHW Pump	
	2		L-T/T Pump	
	3		N	
	4		N	
CN21 LWD1140-02	1	AC 24V Trans	24VAC_L	
	2		24VAC_N	
CN22 LW6A4-03	1	Mixing Valve	CW	
	2		CCW	
	3		24VAC_N	
CN23 SMW250-03D	1	MIX	GND	
	2		MIX_NO	
	3		MIX_NC	

SECTION 5 Control Display and Operation

5.1 Control Dial and Buttons

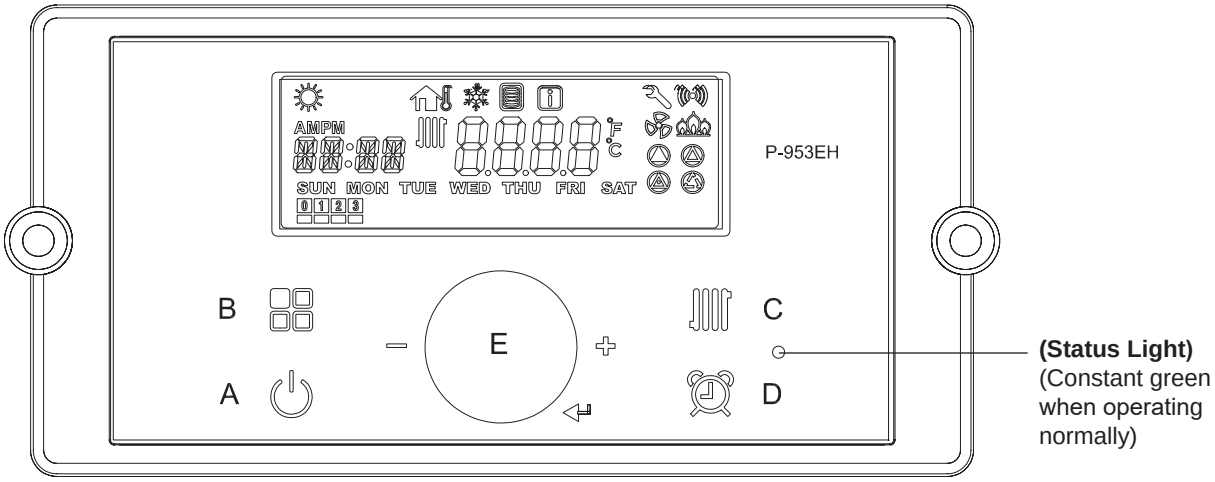

The Control Display

The Control Display has a Control Dial (E), 4 Buttons (A,B,C,D), and a Liquid Crystal Display (with 72 back lit segments). This section of this manual gives instruction on how to navigate into the many functions of the Boiler and to change temperature set points, set system variables and controller parameters.

Buttons			Functionality	
			PRESS (Tap)	**PRESS and HOLD (5 seconds)**
A		Display Power	Turns control Display **ON/OFF**	
B		Modes	Tap to return to menu	(If Display Power was on) **Status Display Mode** (If Display Power was off) **Installer Mode**
C		Heating Water	CH set point change mode (Maximum 82°C (180°F))	(Only functional when no outdoor sensor is connected)
D		Time/Date Set	No Change	To SET:Year/Month/Week/Day/Time/Min
E		Scroll/ Select	Menu select or value up(+) /down(-) or setting dial	

• Temperature Specifications
Operating ambient Temperature Range : -10 to 60°C.
Operating Relative Humidity up to: 90% at 40°C.
Shipping & Storage Temperature Range of : -20 to 80°C.

⚠ WARNING

Do not use this appliance if any part has been under water. Immediately call a qualified service technician to inspect the appliance and to replace any part of the control system and any gas control that may have been under water.

5.2 LCD Overview

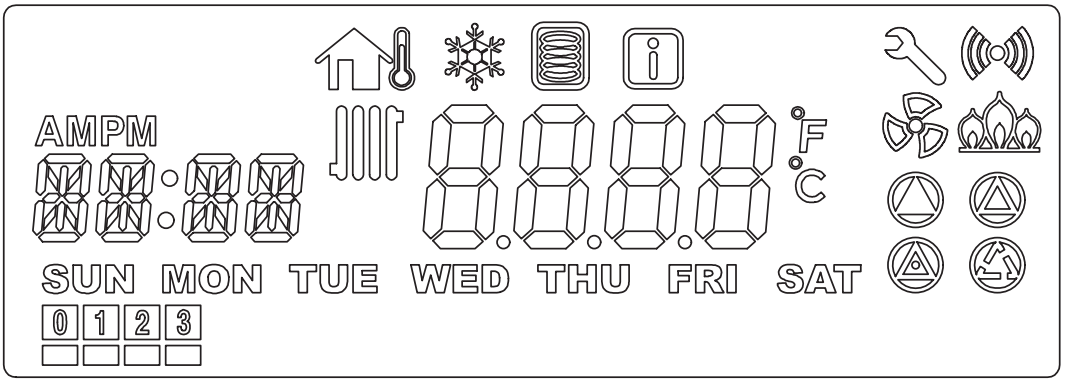

Symbol	Name	Description
	Service Reminder Mode	Service Reminder Mode Indication
	Outside Temperature Mode	Outside Temp Setting Indication
	Anti-freeze Mode	Anti-Freeze Mode Indication
	Storage Mode	Storage Mode Indication
	Informations Mode	Information Mode Indication
	Communication State	Communication State Indication
AMPM 88:88	Time /FGR reading/ FGR accumulator counter	Display cycles through actual time, Flue Gas Recirc (FGR) reading and FGR accumulator counter when burner is operating
	Fan Operating Mode	Fan Operating Mode Indication
	Flame Signal	Flame Signal Indication
	System Pump Mode	System Pump Indication
	DHW Pump Mode	DHW Pump Indication
	Boiler Pump Mode	Boiler Pump Mode Indication
	L-TT Pump Mode	L-TT Pump Mode Indication
°C	Celsius Mode	Indicated as Celsius Temperature
°F	Fahrenheit Mode	Indicated as Fahrenheit Temperature
	Heat Demand Mode	Heat Demand Mode Indication
TUE	Day Mode	Current Day Mode Indication
7	Cascade System Connecting Mode	Cascade System Connecting Mode Indication
	Cascade System Operating Mode	Cascade System Operating Mode Indication

The LCD will illuminate when a user action is detected (a button is pressed) and will turn back off after 20 seconds.

5.3 Operating Mode

■ Operating Mode

After the Power is turned on, and/or the Control Display is turned on , the Control Display will go through a 'Start Up' checklist and briefly show a sequence of diagnostic codes before entering into the 'Operating Mode'. It will then display the following information.

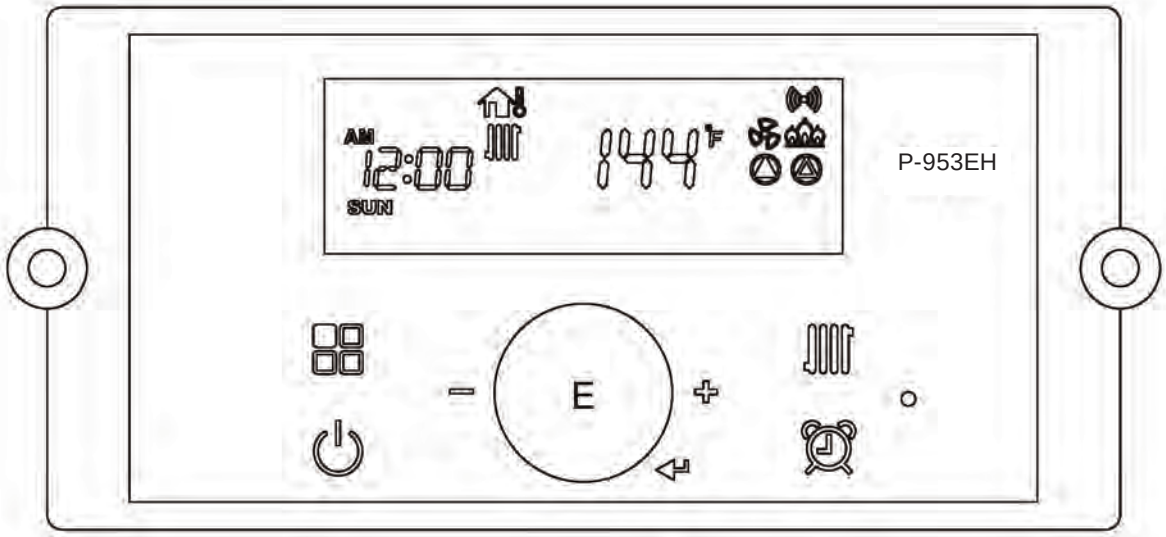

Indicator	Indicator
Current Operating Temperature Set point	144°F
If the Fan is operating	
If a flame is detected	
Celsius or Fahrenheit	°C or °F
Time /CO2 reading/ CO2 accumulator counter	AMPM 88:88
If Outdoor Temperature Sensor is Operating	
If there is a demand for Central Heat (CH)	
If boiler pump is operating	
If communication state is activated	

The Control Display can operate through user and service modes that have specific LCD outputs and dedicated controls:

- Set-Point change mode
- Error mode
- Outside Temperature mode
- Lock mode
- Status Display mode
- Installer mode

* Control Display will not allow changing of button in case of lock mode activation.

5.4 Setting the Clock

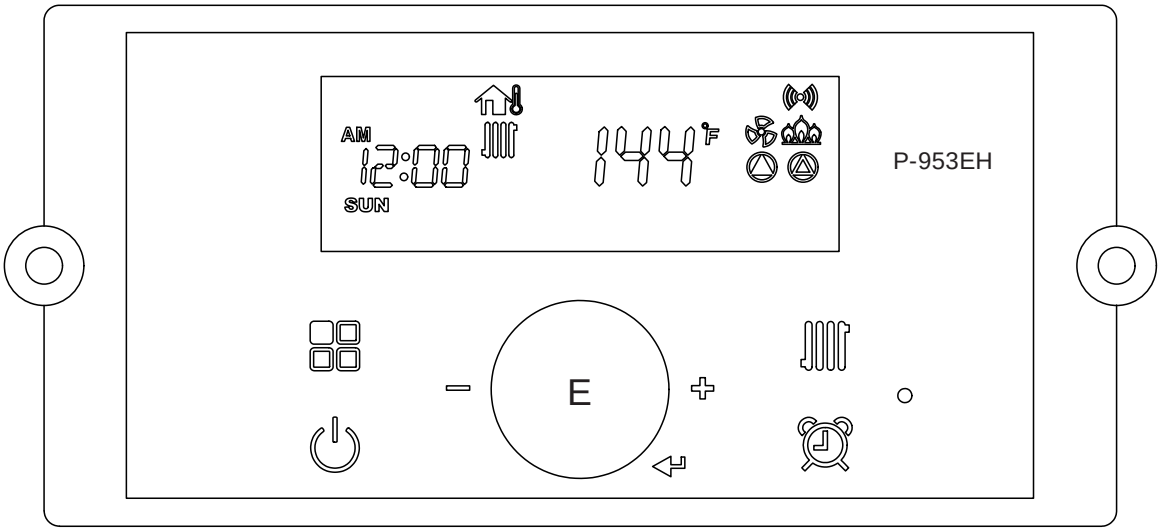

The P-953EH Control Display does NOT have a daily timer or programmable thermostat.

Setting the Clock.

a. Press and hold the ‘Clock button’ for about 5 seconds. Set the ‘Year’ by turning the dial **E**. And then, press the dial **E** to Save.

b. Set the ‘**MON**’ (Month) by turning the dial **E** to the desired month number. Then press the dial **E** to Save.

c. Set ‘**DATE**‘ (1-31, Day of the Month) by turning the dial **E**. Then press the dial **E** to Save.

d. Set ‘**HOUR**‘ (1-24, Hour of the Day) by turning the dial **E**. Then press the dial **E** to Save.

e. Set ‘**MIN**‘ (1-60, Minute of the Hour) by turning the dial **E**. Then press the dial **E** to Save.

f. Set ‘**HOUR**‘ (1-24, Hour of the Day) by turning the dial **E**. Then press the dial **E** to Save.

To Exit at any time, tap the button.

5.5 CH Set Point Change Mode

- CH set point Change Mode (This mode is only functional when the outdoor sensor (O/S) is not connected.)

- In accordance with the United States Energy Policy and Conservation Act, this boiler is equipped with outdoor reset capability, a feature that saves energy by reducing boiler water temperature as heating load decreases Refer to Section 5.9 regarding the O/S details.

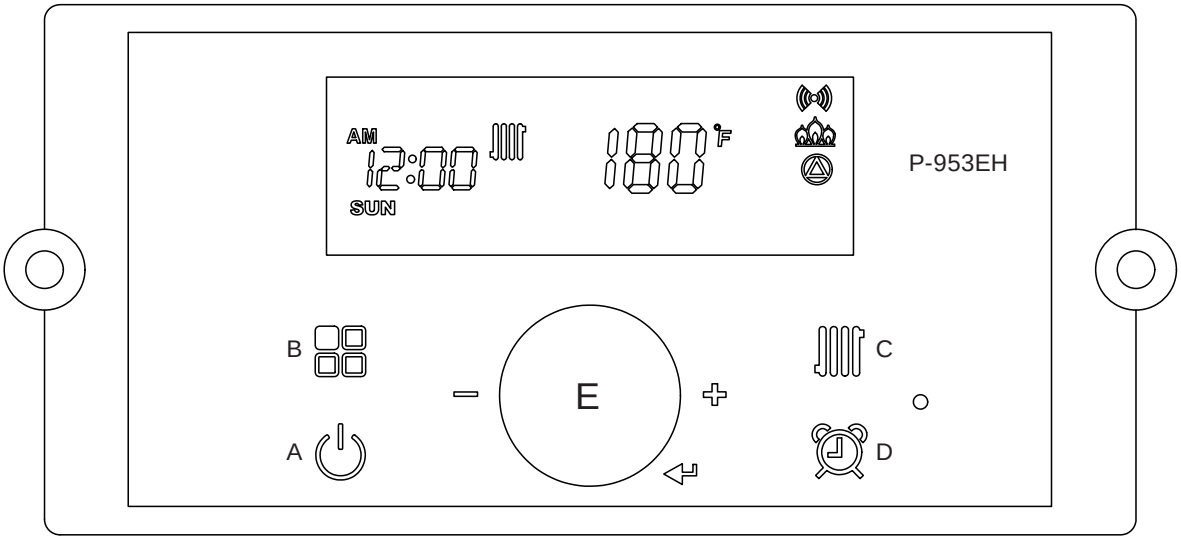

To change the high temperature CH Setpoint:

- Press the C button once: The CH icon, 1:Ht and its current setpoint value will appear.
- Turn dial E clockwise to increase, and counterclockwise to decrease it value to reach desired set point.
- Press dial E to save the value and exit.

To change the low temperature CH Setpoint (if applicable):

- Press the C button twice: The CH icon, 2:Lt and its current setpoint value will appear.
- Turn dial E clockwise to increase, and counterclockwise to decrease its value to reach desired set point.
- Press dial E to save the value and exit.

Indicate	Indicator
Table 23. Current CH Temperature Set point	180
Table 24. Celsius or Fahrenheit	°C or °F
Table 25. If Communication state is activated	
Table 26. If flame is detected	
Time /CO2 reading/ CO2 accumulator counter	AM PM 88:88
Table 27. If CH pump is operating	
Table 28. If there currently a Demand for Central Heat (CH)	

Default value for CH 1:Ht is 140°F (60°C). Factory set range is 130°F to 180°F (54°C - 82°C).
This range can be adjusted per Installer Modes P6 and P7. See Section 5.7 on page 64.
If applicable, default value for CH 2:Lt is 140°F (60°C). Factory set range is 130°F to 180°F (54°C - 82°C).
This range can be adjusted per Installer Modes P40 and P41. See Section 5.7 on page 64.

5.6 Status Display Mode

To view any Status Parameter,

Press and Hold Button B to get into the Status Display Mode.

Rotate Dial E until you find the Parameter that you wish to view. Tap Dial E to enter that Parameter as required. Press Dial E to save and to exit the Status Information Menu. To go to the Operation Screen, Press button B.

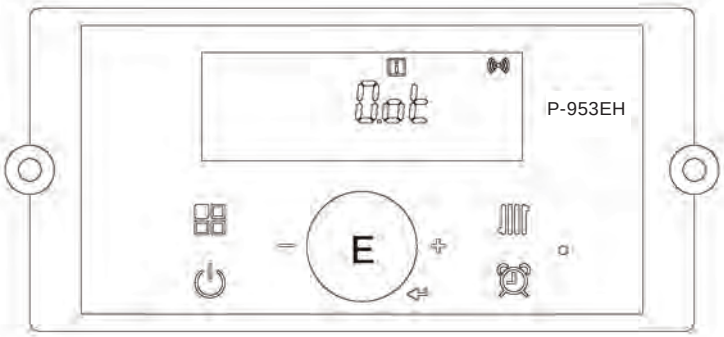

Digital Display		Status Display Parameter		Description	
O: ot		Outdoor temperature		Current outdoor sensor temperature	
A: In		0-10 V display		Current voltage of (0-10V input)	
b: tt	1: CH	CH target temperature		Current CH target temperature	
	2: dH	DHW target temperature		Current DHW target temperature	
	3: SY	SYSTEM target temperature		Current SYSTEM target temperature	
	4: Lt	LT/T target temperature		Current LT/T target temperature	
C: It		CH water return temperature		Current CH water return temperature	
d: Fr		Fan Speed (rpm)		Current Fan Speed (rpm)	
E: oP		CH supply temperature (Operating temperature)		Current heating temperature	
F: Eh		Exhaust gas temperature		Current exhaust gas temperature	
H: dH		Indirect DHW tank temperature * If a temperature sensor is not connected then it will display with 0°F (0°C).		Current DHW tank temperature	
L: rt	1: PH	Burner Operation Time	Time for supply power	L: rt on display on sub menu	Unit : 1000hour
	2: rh		Time for burner operation		Unit : 1hour
	3: rH		Time for burner operation		Unit : 1,000hour
	4: It		Cycle for ignition		Cycle : 10 times the displayed unit
	5: IH		Cycle for ignition		Cycle : 10,000 times the displayed unit
	6: C2		Current accumulated count	Cycle : Increase by 1 at the time of operation above the ppm reference value (Display accumulative count / 10)	
M: CC	SELF	Percentage of self units running.		Percentage of self units running.	
	ALL	Capacity for all operating cascade units		Percentage of all cascade units running. This screen shows the overall cascade power output. The range of this value of boilers communicating with the Master x 100. For example, if 4 boilers are connected and communicating, the maximum cascade power is 400% . Range: 0-100%	
	F1 - F14	Capacity for individual boilers		Percentage of each cascade units running. Ex. F1, F2, ...	
N: st		System Temperature (cascade mode) * If system temperature sensor is not connected then it will display with 0°F (0°C).		Current System Temperature (cascade mode)	
O: Lt		L-TT Temperature (L-TT mode)		Current LT/T target temperature (L-TT mode)	
P: FM		Volt Flame Current Volt		Current Volt Flame Current Volt	
r: AP		APS Volt Current air pressure sensor Volt		Current air pressure sensor Volt	
S: C2		Flue Gas Recirc Current sensor ppm		Current flue gas recirc (FGR) sensor ppm Ex. Ppm = 6000 Marked as 600	

5.7 Installer Mode

These changes are to be made only by a qualified technician.

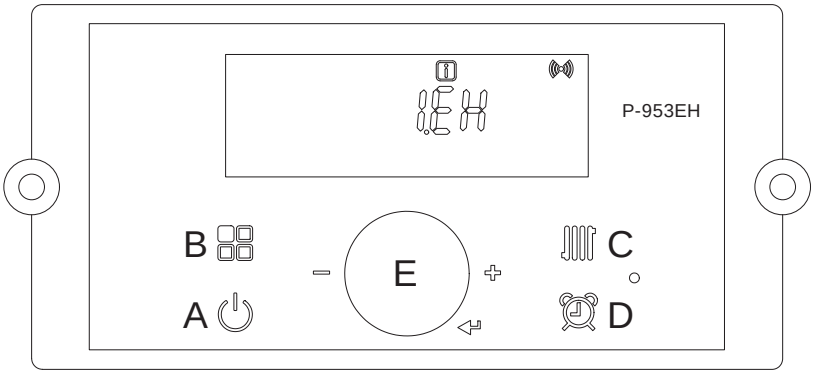

WARNING

For Low temperature heating applications, adjust P6 to desired value. For cascade applications, adjust P31 to desired water temperature. Call Technical services for assistance in changing settings.

To change any of the Installer Parameter,

Start by turning OFF the Power (Button A) to the Display Control.

Then, with the power OFF, Press and HOLD (more than 5 seconds) the Button B to get into the Installer Mode.

Rotate Dial E until you find the Installer Parameter (full list on facing page) that you wish to change. Tap Dial E to enter that Parameter.

Adjust to the setting that you require using Dial E and then press (tap) Dial E to save and to Exit.

Finish by pressing button B and then turning the power back on to the control (Button A).

Index Numbers	Default	Parameter	Description
1: EH		Error history up to 10	Check last 10 error codes (E0 - E9)
2: cE	OFF	Delete Error history	Select “ON“ to delete error code history Range: ON or OFF
3: In	OFF	System initialize	Select “ON“ to reset to factory setting
4: OH	68°F (20°C)	Maximum Outdoor Temperature	When used with an outdoor sensor, sets the maximum outdoor design temperature for the system design. Maximum outdoor temperature must be set at least 9°F above the minimum outdoor temperature. Range: (Minimum Outdoor Temperature + 9°F) to 110°F
5: OL	30°F (-1°C)	Minimum Outdoor Temperature	Sets the minimim outdoor design temperature for the system. Minimum outdoor temperature must be set at least 9°F below the maximum outdoor temperature. Range: -4°F to (Maximum Outdoor Temperature - 9°F) - 180°F
6: cH	180°F (82°C)	Maximum Supply Temperature	Sets the maximum design supply temperature based on the minimum outdoor design temperature. Maximum supply temperature must be set at least 9°F above the minimum supply temperature. Range: (Minimum Supply Temperature + 9°F) - 180°F

5.7 Installer Mode (continued)

Index Numbers	Default	Parameter	Description
7: cL	130°F (54°C)	Minimum Supply Temperature	Sets the design supply water temperature based on the maximum outdoor design temperature. Minimum supply temperature must be set at least 9°F below the maximum supply temperature. Range: 40°F to (Maximum Supply Temperature - 9°F)
8: OF	100°F (38°C)	Warm Weather Shutdown	This warm weather temperature setting will shut down CH Mode Range: 50°F - 110°F
9: bt	0	Boost Function	This function boosts CH temperature to the maximum if set point is not reached within the set period of time. Range: 0 - 120
10: bd	10°F (6°C)	Boost Degree	The boiler will add this temperature to the boiler target set point based on outdoor reset curve. Range: 5 - 15°F
11: bl	20 Min	Boost Interval	The boiler will index the temperature based on time interval set on 11 bl. Range: 0 - 120Min
12: FH	00	Maximum Fan Speed	Adjusts Maximum Fan Speed Range: -30 - +30
13: FL	00	Minimum Fan Speed	Adjusts Minimum Fan Speed Range: -30 - +30
14: dr	NO	Reset Burner Runtime Counter	Select ON to Initialize burner operation time. Range: NO or YES
15: dl	NO	Reset Ignition Cycle Counter	Select ON to Initialize ignition cycles. Range: NO or YES
16: Ft	1 Min	CH Anti-Cycling Time	This function delays burner operation during CH mode. Range: 0 - 20 Min
17: bo	15°F (8°C)	Set Differential Temperature to turn burner “ON“	When set, the appliance will operate to heat CH water when water temperature falls below a differential is 27°F, the appliance will turn on when CH water temperature falls below 153°F. Range: 5°F - 30°F
18: cb	100	Heating Capacity	Set Heating combustion rate Range: 50 - 100%
19: db	100	DHW Capacity	Set DHW combustion rate Range: 50 - 100%
20: PE	1 Min	Boiler pump & system pump post-purge time, T/T satisfied	Allows user to set boiler and system pump post-purge time once appliance CH setpoint and thermostat are satisfied. Range: 1 - 5 Mins
21: dH	120°F (49°C)	Indirect Storage Tank Temperature Set Point	Sets Maximum Indirect storage tank Temperature. Range: 95 - 180°F
22: dd	7°F (4°C)	Indirect Storage Tank Differential Set Point	DHW Differential Set Point. Range: 5 - 30°F
23: Pr	1 Min	DHW Pump Post Run Time	DHW Pump Post Run Time. Range: 0 - 10 Min
24: dP	30 Min	DHW Priority Timer	DHW Priority Timer. Range: 0 - 60 Min
25: St	180°F (82°C)	Boiler Supply Indirect Storage Tank Temperature	Boiler Supply Indirect Tank Temperature. Range: 120°F - 180°F
26: FP	ON	System Freeze Protection Mode	System Freeze Protection Mode. This mode should be turned OFF for snow melt application. NOTE: This mode should be ON during normal operation. Range: ON/OFF

5.7 Installer Mode (continued)

Index Numbers		Default	Parameter	Description
27: Cn		0	Cascade Number	Cascade Number Range: 0 (Leader), 1 (Follower) 1 to 3 “29: CP” has to be set with the total number of units in the cascade before “28: Cn” can be set. Cascading the FT 301/399 FT Series (document #1548) can be found online at the manufacturers website.
28: CP		1	Cascade Parameter	Number of units cascaded. Range: 0 - 3
29: Eh		OFF	Common Vent	Common Vent. Range: ON / OFF
30: Cr	Auto		Automatic Rotation	The first unit to operate when there is a T/T call is the unit that ran the least amount of time during the prior heat calls.
	Cr:Ct	48 Hours	Cascade Rotation Time	Cascade Rotation time. Range: 0 - 240 Hours
31: Ct		180°F (82°C)	Cascade System Temperature	Cascade System Temperature Range: 40 - 180°F
32: Cd		10°F (6°C)	Cascade System Temperature Differential (burner ON)	Cascade System Temperature Differential (burner ON). Range: 5°F - 30°F
33: HA		0-2	High Elevation Mode	High Elevation Mode (0-2, 2-5, 5-8, 8-10) (0-2= 0 - 2000 ft, etc)
34: AP	AP:cP	5 Min	Internal CH Pump, CH Pump and DHW Indirect Pump Test Mode	This function sets the time to run both the Internal CH and Internal DHW Storage pumps to purge air from the system. Range: 1 - 30 minutes
	P1:oF or P1:on	OFF	Internal CH Pump and CH Pump Test Mode	Turn this function on to activate Internal CH and CH pump testing. Only works in installation mode. Turns off when in normal mode
	P2:oF or P2:on	OFF	Internal CH Pump and DHW Indirect Pump Test Mode	Turn this function on to activate Internal CH and DHW Indirect pump testing. Only works in installation mode. Turns off when in normal mode.
35: SS	SS:Sd		Allows the user to set the year of next service reminder	Allows the user to set the year of next service reminder XX / XX / XXXX (MONTH / DAY / YEAR)
	SS:br	0	Allows the user to set the service reminder based on BURNER RUN HOURS	Allows the user to set the service reminder based on BURNER RUN HOURS (0: OFF, 1~9000Hours)
36: UC	FAH(°F)	FAH	Allows the user to change the unit	Allows the user to change the unit. Range: °F or °C
	CEL(°C)			
37: CM		OFF	CH Step Modulation	Allows the user to turn ON the step modulation, which regulates burner output in six steps at one minute intervals. Step modulation will start at the last modulation rate of the boiler and work up one minute at a time. (Selection: OFF or ON)
38: dM		OFF	DHW Step Modulation	
39: SA	AquA	Aqua	Select Aquastat (contact) Type	This mode is aquastat (contact) type
	SEnS		Select DHW NTC Sensor Type	This mode is NTC sensor type
P40:LH		180°F (82°C)	L-T/T Maximum Supply Temperature	Sets the maximum supply temperature for the L-T/T curve based on minimum outdoor temperature. Range: (Minimum supply temperature - 9°F) to 180°F.
P41:LL		130°F (54°C)	L-T/T Minimum Supply Temperature	Sets the minimum supply temperature for the L-T/T curve based on maximum outdoor temperature. Range: 40°F to (Maximum supply temperature - 9°F).

5.7 Installer Mode (continued)

Index Numbers	Default	Parameter	Description
42: MI	Off	Mixing Valve	Mixing Valve on/off set Range: ON - OFF
43: LT	7° F (4° C)	L-T/T Differential Set Point	L-T/T Differential Set Point Range: 5-30 °F
44: C2	On	Flue Gas Recirc	Flue Gas Recirc Sensor on/off set Range: ON - OFF
45: CL	8000 ppm	ppm alarm range	Set the flue gas recirc sensitivity level for alarm notification. Values: 2000, 4000, 6000, 8000 or 10000 ppm. Note: Readings of 10000 ppm or higher will display as 9999.
46: Hr	Off	Hard Lock Out	Hard Lock out set based on flue gas recirc accumulator exceeding its critical value and outdoor temperature above 35 F. Range: ON - OFF

This function requires an outdoor sensor on the boiler. If outdoor sensor drops below 35 F, the boiler resumes regular operation. Contractor must set to ON if this function is desired.

5.8 DHW Indirect Storage Mode

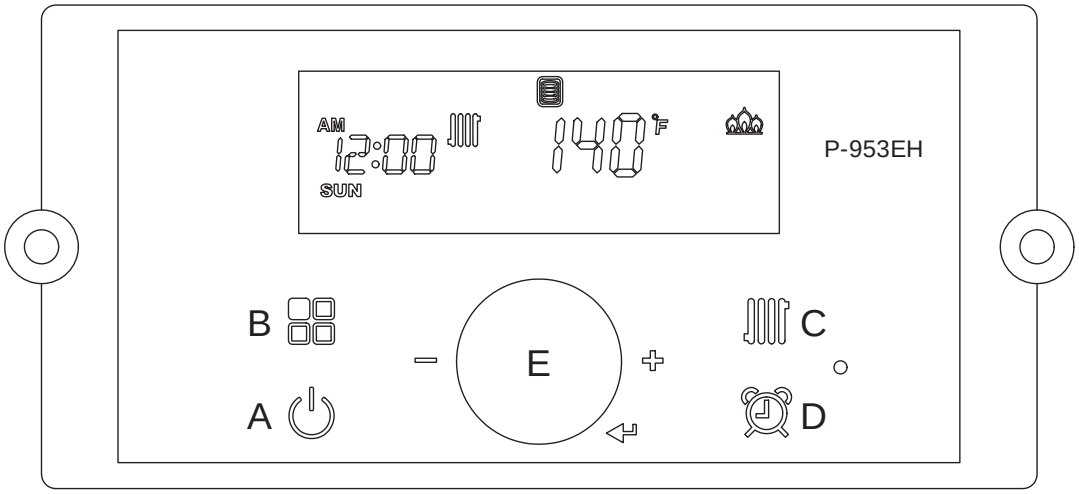

To change Storage Mode Temp,

First turn OFF the power to the Control Display. Then Press and Hold Button B to get into the Installer Mode.

Rotate Dial E until you find **21:dH** Tap Dial E to enter Storage Mode. Storage Mode indicates that the boiler is heating the water held in an indirect water heater. When Storage Mode is active, the display will appear as shown.

Turn the E dial clockwise to increase, and counterclockwise to decrease setting.

Press E dial to save changes and to Exit.

Indicate	Indicator
Current CH set point of temperature	140°F
Celsius or Fahrenheit	°C or °F
If flame detected	
Storage mode inication	
If there is a Demand for Central Heat (CH)	

Note: If using an Aquastat on the indirect tank, the stored hot water temperature is controlled by the Aquastat.

Refer to Installer Modes, Section 5.7 on page 64, Parameters 19, 21 to 25 and 39:SA Aquastat (Default)

5.9 Outdoor Reset Adjustment

Outdoor Reset varies the control set point based on the outdoor temperature. The reset function works as shown in Figure 'CH Outdoor Reset'. When the outdoor air temperature reaches 4:OH "Maximum outdoor temperature set point", the control point setting is adjusted to 7:cL "Minimum boiler temperature set point". When the outdoor air temperature reaches 5:OL "Minimum outdoor temperature set point" the control set point is adjusted to 6:cH "Maximum boiler temperature".

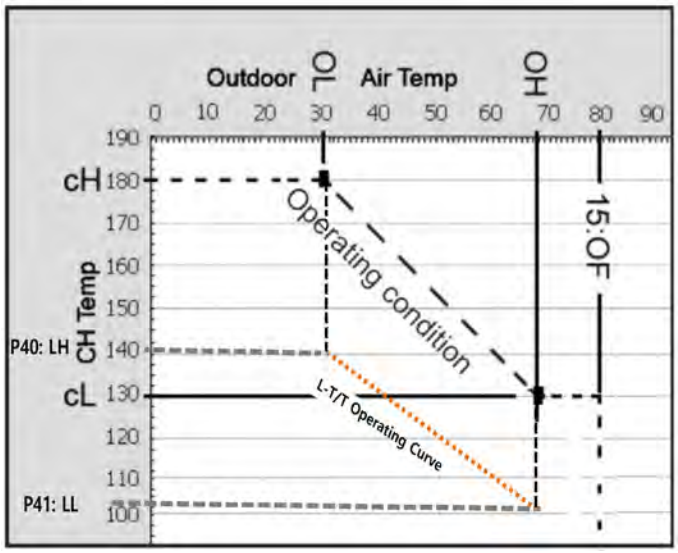

P40 and P41 require adjustment when using a mixing valve. Determine required maximum water temp on design day for P40, and set P41 as the lowest supply temperature based on a mild outdoor temperature. The boiler will operate to satisfy the highest temperature demand. (Example shows P40:LH = 140 F, P41:LL = 102 F).

Default warm weather shutdown temprature is 100ºF (38 C)

The Outdoor Temperature Mode Icon on the display will flash if an Outdoor Sensor or 0-10 Volt is not connected to the appliance.
To check the CH Target Temperature while using Outdoor Temperature Mode, press the button while the appliance is operational and the display panel is powered on.

Connect to terminal strip as outlined in Section 4.19 Electrical Connections.

NOTE: 0 - 10VDC terminals may not be used for both outdoor reset and 0 - 10VDC temperature set point simultaneously.

5.10 External Set Point Temperature Control

A signal from a building management system may be connected to the appliance to enable remote control. This signal should be a 0-10 volt DC signal. When this input is enabled, a building control system can be used to control the set point temperature of the appliance.

The control interprets the 0-10 volt signal as follows; when the signal is between 0 and 1.5 volts, the appliance will be in standby mode, not firing.
When the signal rises above 1.5 volts, the appliance will ignite. As the signal continues to rise towards its maximum of 10 volts, the appliance will increase in set point temperature. Adjust 6:cH and 7:cL to set MIN and MAX boiler water temperatures respectively.

Connect a building management system or other auxiliary control signal to the terminals marked for this purpose on the appliance terminal block (shown in Piping Diagrams, this manual). Caution should be used to ensure that the 0-10 VOLT + connection does not become connected to ground.

Connect to terminal strip as outlined in Section 4.19 Electrical Connections.

NOTE: 0 - 10VDC terminals may not be used for both outdoor reset and 0 - 10VDC temp set point simultaneously.

5.11 Error Mode

The Control Display will show the following information when an Error is presented.

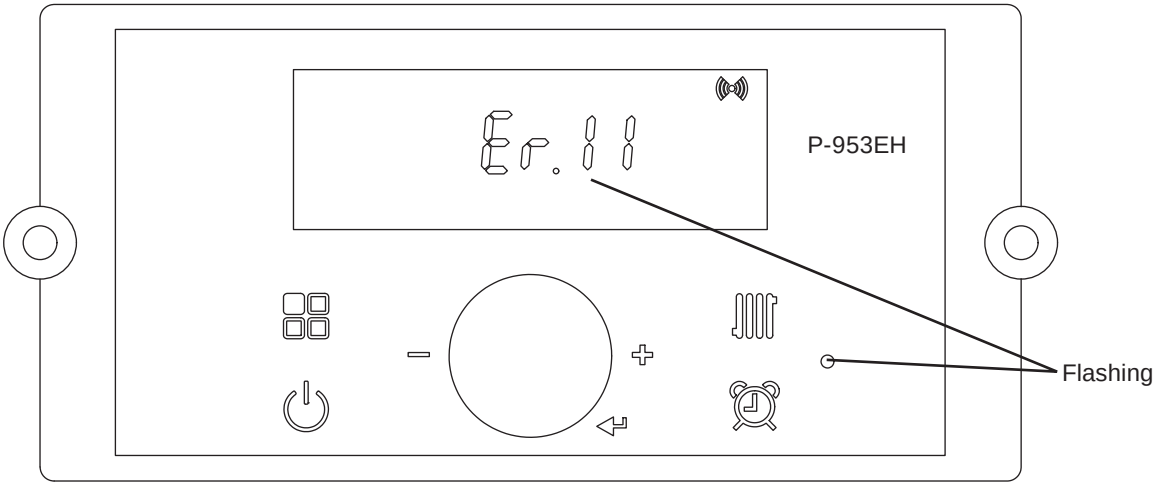

Indicate	Indicator
Error ‘Er:’ sign Segment	Er:11
Error Code	Er:11
If Communication state is activated	

Note: When communication between the Control Display and the main controller is lost, the will not be displayed.

Refer to Section 6 for Error Codes

SECTION 6 Error Codes

6.1 Error Code Tables

Error Code	Error Code Description	Possible Remedies	Recover methods
10	Combustion fault Flame has Extinguished 8 (Eight) Times	Press the Power button to clear the Error Code. If Error happens again: 1. Monitor the gas pressure to the appliance while in operation. Ensure pressure is between 3.5” to 10.5” WC (Nat. Gas) and 8” to 13” WC (Propane). 2. Check gas valve wire. Ensure connection is secure. 3. Check flame detection sensor. Ensure connections are secure. Normal operating settings are more than 2.5DC before ignition, less than 2.5DC after ignition. 4. Check exhaust and intake terminations for blockages. Also verify that intake, intake boot, blower and burner housing is free of blockages and debris. 5. Assure that the flame is stable when lit. Confirm Flame stability by manually forcing the boiler into Low Fire (see section 4.20) - Burner should not cycle on and off in low fire. If burner cycles on/off during low fire operation adjust fuel/air mixture and confirm CO_2 values are within range for model and fuel type. 6. If the problem persists, contact technical support.	Hard Lock
11	Ignition fault Ignition has Failed 10 (Ten) Times	Press the Power button to clear the Error Code. If Error happens again: 1. Monitor the gas pressure to the appliance while in operation. Ensure pressure is between 3.5” to 10.5” WC (Nat. Gas) and 8” to 13” WC (Propane). 2. Check gas valve wire. Ensure connection is secure. 3. Check flame detection sensor. Ensure connections are secure. Normal operating settings are more than 2.5DC before ignition, less than 2.5DC after ignition. 4. Check igniter transformer for proper connection. 5. Clean the spark igniter with steel wool to remove oxides. Ensure proper separation (3-4 mm). 6. Replace the spark igniter if damaged. Remove and inspect burner. If burner is damaged/blocked - replace burner 7. Assure that the flame is stable when lit. 8. If the problem persists, contact technical support.	Hard Lock
16	Water temperature over-heating fault Operating Temperature Sensor detects Water Temperature Greater than 203°F (95°C)	Press the Power button to clear the Error Code. If boiler is not piped Primary/Secondary it is likely the internal boiler pump is not able to move enough water thru heat exchanger. If Error happens again: 1. Check if dip switch Max Fire setting is ON. Switches 6 and 7 should be OFF for normal operation. 2. Check if CH inlet pipe is blocked. Ensure there is enough water flowing to the appliance. 3. Check Operating Temperature sensor at CH heat exchanger outlet. If resistance is zero, replace the sensor. 4. Verify operation of internal boiler pump by checking rotation of pump shaft. (Manually spin pump shaft by inserting a flat head screwdriver. You may need to remove a side panel knock-out for better access). 5. If the problem persists, contact technical support.	Hard Lock
27	High CO2 sensor accumulator value	Check for flue gas recirculation. The boiler is bringing flue gases back into the boiler. 1. Blinking display: accumulated value > 2000 / Soft lock-out 2. Solid display; accumulated value > 3000 / Hard lock-out if P46 is turned ON by contractor and outdoor tem perature > 35 F. Soft lock-out if P46 = OFF or outdoor temperature < 35 F.	Soft Lock
30	System sensor fault	This Error Code will go away when System temperature decreases. If Error happens again: 1. Check System temperature sensor. Ensure connectios are secure. 2. Check System sensor resistance. If resistance is zero, replace the sensor. 3. If the problem persists, contact technical support.	Soft Lock
31	Return sensor fault	This Error Code will go away when Return temperature decreases. If Error happens again: 1. Check Return temperature sensor. Ensure connectios are secure. 2. Check Return sensor resistance. If resistance is zero, replace the sensor. 3. If the problem persists, contact technical support.	Soft Lock
32	DHW outlet sensor fault	This Error Code will go away when CH temperature decreases. If Error happens again: 1. Check DHW or CH temperature sensor. Ensure connections are secure. 2. Check DHW or CH sensor resistance. If resistance is zero, replace the sensor. 3. If the problem persists, contact technical support.	Soft Lock
33	OP Water temperature sensor fault		

SECTION 6. Error Codes (continued)

Error Code	Error Code Description	Possible Remedies	Recover methods
34	L-tt sensor fault	This Error Code will go away when L-tt temperature decreases. If Error happens again: 1. Check L-tt temperature sensor. Ensure connections are secure. 2. Check L-tt sensor resistance. If resistance is zero, replace the sensor. 3. If the problem persists, contact technical support.	Soft Lock
35	Exhaust sensor fault	This Error Code will go when Exhaust temperature decreases. If Error happens again: 1. Check Exhaust temperature sensor. Ensure connections are secure. 2. Check Exhaust sensor resistance. If resistance is zero, replace the sensor. 3. If the problem persists, contact technical support.	Soft Lock
37	Power frequency fault	Supply frequency is too high to operate. This Error Code will go away when supply frequency returns to normal operating range. If Error happens again: 1. Ensure appliance is properly wired to a power source meeting the requirements on the rating plate. 2. If problem persists, contact technical support.	Soft Lock
38	EPROM fault	Press the Power button to clear the Error Code. If the problem persists. contact technical support.	Hard Lock
40	Gas leakage fault	IMPORTANT: If you smell gas, STOP! Follow the instructions on page 2 of this manual, and call a qualified service technician or the fuel gas utility. Press the Power button to clear the Error Code. If Error happens again: 1. Check the appliance cover. Ensure it is secure. 2. Check gas connections for leakage with a soapy solution. Fix any leaks. 3. Check condition of the burner assembly. 4. If the problem persists, contact technical support.	Hard Lock
42	External LWCO/ safety fault	Press the Power button to clear the Error Code. If Error happens again: 1. Ensure the LWCO jumper wire is properly connected. 2. If the problem persists, contact technical support.	Soft Lock
43	Burner over-heating fault	Press the Power button to clear the Error Code. If Error happens again: 1. Check boiler overheat switch and thermal fuse connections. Ensure connections are secure 2. Boiler overheat switch is an auto reset switch (Soft lock-out). Allow boiler to cool down. As the water temperature drops, boiler will restart. If resistance at overheat switch remains zero, replace switch. 3. Check Thermal fuse: Constant open switch if tripped (Hard lock-out). Thermal fuse must be replaced. 4. If the problem persists, contact technical support.	Hard Lock
44	Air Pressure Sensor Range (APS) Fault	Press the power button to reset If error happens again: 1. Check the vent pipe for blockages. 2. Check the air intake pipe for blockages. 3. Inspect air intake filter screen located at the air intake adapter on top of the boiler. Clean if necessary. 4. Inspect the Venturi and fan motor, the air intake screen at the fan connection or the burner itself for any debris that could have been drawn in by the fan through the air intake. 5. If error does not clear, replace the APS. 6. If the problem persists, contact technical support.	Hard Lock
45	Air Pressure Sensor Fault	Check the aps connection. 1. If APS is closed and connections are secure, check APS connection. 2. If the problem is not happen, replace the APS 3. If the problem persists, contact technical support.	Soft Lock
61	Fan fault	This Error Code will go away when the condition is remedied. If Error happens again: 1. Check the connections to the fan. Ensure all are secure. 2. Check intake and exhaust for blockages and debris. 3. If the fan does not rotate during the ignition sequence, check for AC8V~26.5V power at the fan connection. IfAC8V~26.5V power is present at the control, replace the fan. If the blower does not have AC8V~26.5V power, check power at the control. If AC8V~26.5V power is not present at the control, replace the control. 4. If the problem persists, contact technical support.	Soft Lock

Error Code	Error Code Description	Possible Remedies	Recover methods
70	MCU self diagnostics fault	This Error Code will go away when the condition is remedied. If Error happens again: 1. Turn power OFF and ON at the main power switch internal to the appliance. 2. If the problem persists, contact technical support.	Soft Lock
72	Flame Signal Fault	This Error Code will go away when the condition is remedied. If Error happens again: 1. Turn power OFF and ON. 2. Check flame rod. Ensure connections are secure. 3. If the problem persists, contact technical support.	Soft Lock
76	Display to main control communication fault	This Error Code will go away when the condition is remedied. If Error happens again: 1. Check connections from main control to display panel. 2. If the problem persists, replace the display and/or contact technical support.	Soft Lock
77	Outdoor sensor error	This Error Code will go away when the condition is remedied. If Error happens again: 2. Check outdoor sensor resistance. If resistance is zero, replace the sensor. 3. If the problem persists, contact technical support.	Soft Lock
78	Cascade signal fault	This error will go away by connectiong the cascade cable when operating multiple boilers in cascade mode. 1. Check if all boilers are programmed properly. Program boilers without the cascade cables connected between boilers. 2. Once boilers are programmed, connect the cascade cables. 3. The lead boiler will automatically share all cascade parameter with the other boilers. The system parameters only need to be set up on the Lead boiler.	Soft Lock
80	Internal low water cut-off fault	This Error Code will go away when the condition is remedied. If Error happens again: 1. Ensure all valves are open to the appliance and there are no leaks. 2. Ensure all air has been purged from the system. 3. Check wiring connections to low water level sensor. Ensure all are secure. 4. Check low water level sensor resistance. If resistance is zero, replace the sensor. 5. If the problem persists, contact technical support.	Soft Lock
81	Internal low water cut-off fault	This Error Code will go away when the condition is remedied. If Error happens again: 1. Ensure all valves are open to the appliance and there are no leaks. 2. Check wiring connections to low water level sensor. Ensure all are secure. 3. Check low water level sensor resistance. If resistance is zero, replace the sensor. 4. If the problem persists, contact technical support.	Soft Lock
85	Anti-freeze fault (Appliance has detected water temperature below 34°F(1°C)	This Error Code will go away when the freezing condition is remedied. If Error happens again: 1. Ensure appliance is located in a mechanical room protected from freezing conditions. 2. Ensure all valves are open to the appliance, there are no leaks. 3. Check wiring connections to low water level sensor. Ensure all are secure. 4. Check low water level sensor resistance. If resistance is zero, replace the sensor. 5. If the problem persists, contact technical support.	Soft Lock
94	Exhaust gas temperature fault	This Error Code will go away when the condition is remedied. If Error happens again: 1. Check if dip switch Max Fire setting is ON. Switches 6 and 7 should be OFF for normal operation. 2. Check exhaust temperature sensor. Ensure connections are secure. 3. Check sensor resistance. If resistance is zero, replace the sensor. 4. Check exhaust vent for blockage. 5. If the problem persists, contact technical support.	Soft Lock

6.2 Fault Tree Analysis

1. Flame detection

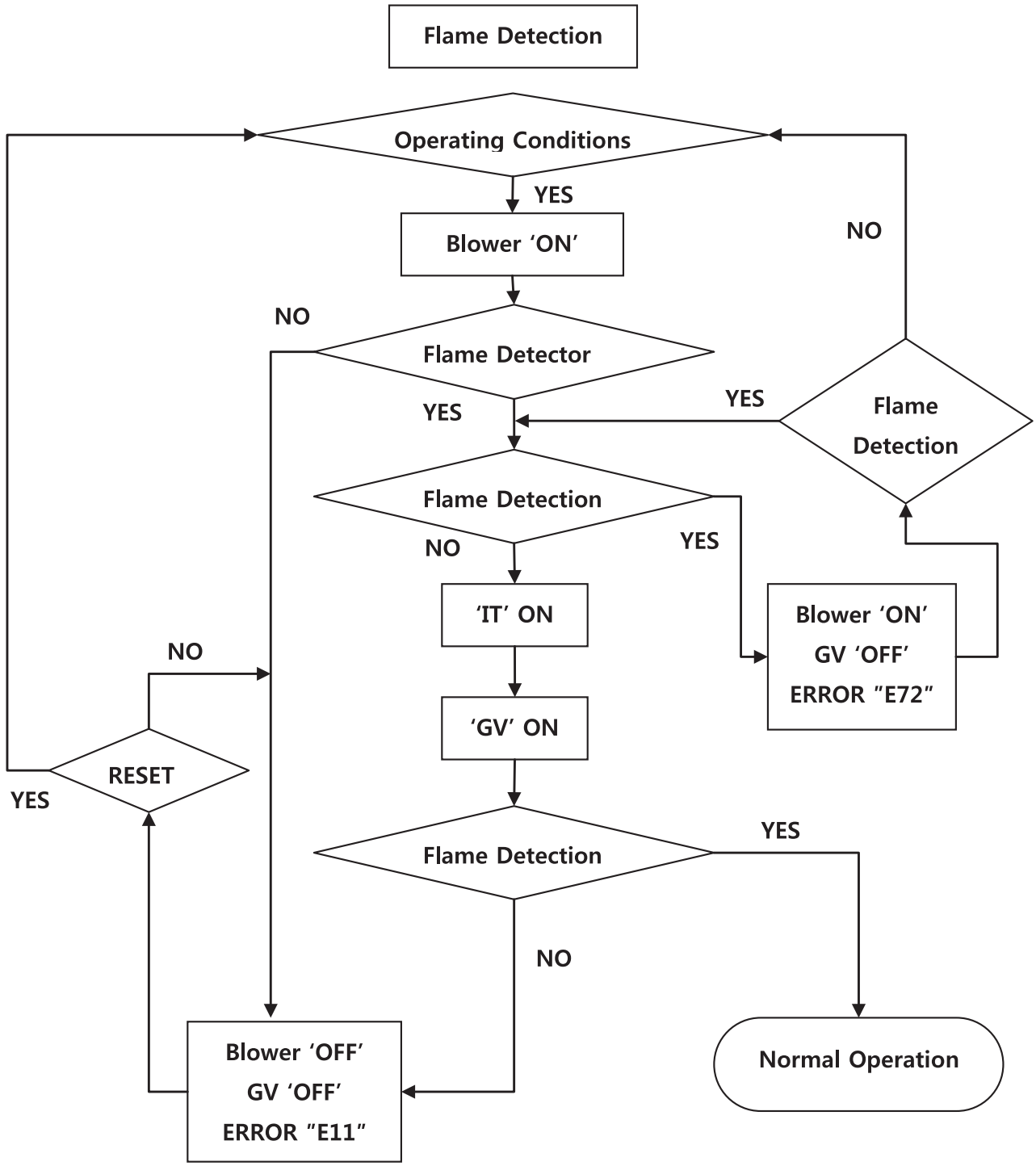

6.3 Fault Tree Analysis (cont)

2. Gas Detection

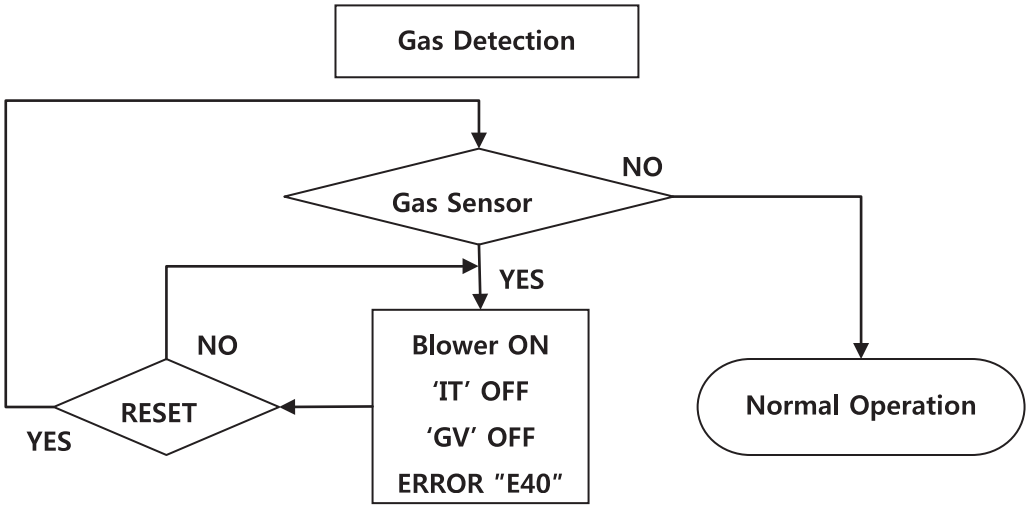

3. 'Storage', 'DHW', 'OP', 'CH overheat', 'Exhaust heat' Sensor detects

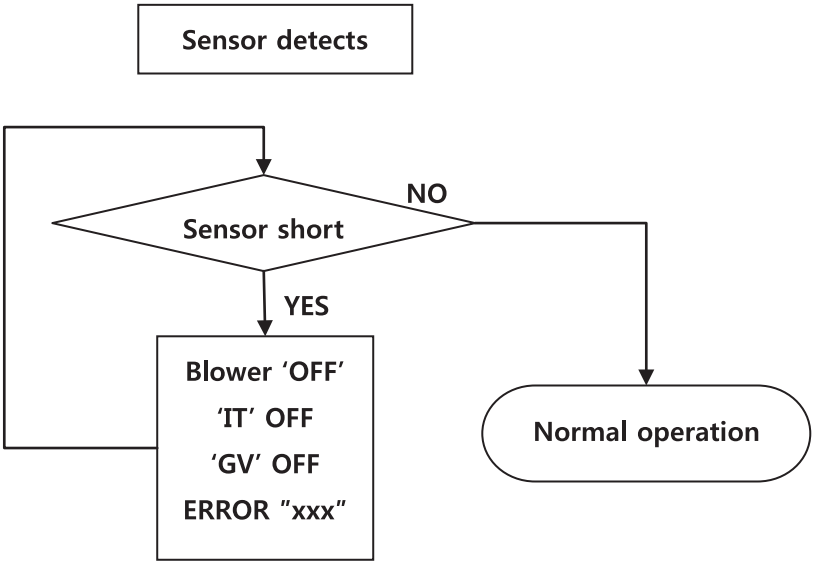

Error code	contents
E32	DHW NTC open or short
E33	OP NTC open or short
E35	Exhaust NTC open or short

SECTION 7 Trouble Shooting

7.1 Diagnostics

Question	Answer
The blower is still operating after the combustion stops.	This is normal because the blower keeps operating for 1 minute to vent (exhaust) the flue gas from the chamber once the combustion has stopped.
Temperature Rise too Quickly	Occurs when supply water temperature in heat exchanger rises faster than 2°F per second during the first two minutes the burner is on. Automatically resets after a few minute delay or using manual reset on control panel. See message displayed TEMPERATURE SENSOR and follow procedure for loose connections.
Abnormal sounds come from unit during operation.	A leak of combustion gas between sealed chamber and exhaust tube inside the unit. Call a qualified service technician for evaluation.
	Improper venting termination, make sure that the venting termination complies with specification.
	Check the supply gas pressure is sufficient. Insufficient gas pressure will cause unstable burner flame and noise.
CH Temp drops lower than expected before unit re-fires	Change Parameter 17:bo to 10 degrees F (5.5 degrees C)

7.2 Suggested Corrective Actions

This controller is able to record information about the boiler's condition at the time of the five previous faults or errors. Refer to the Section '5.11 Error Mode' of this manual.

Display	Condition	Diagnostic	Corrective Action(s)
Nothing shown on display control panel and blower running at full speed.	Control is not receiving power.	Check wiring for short circuit or incorrect wiring.	Correct wiring per wiring diagram including connection of transformer to the control.
		Check transformer connection to the control per wiring diagram. Check for 12V output of transformer.	Replace transformer if it is receiving 120V, but not outputting 12Vac.
Nothing is shown in display control panel and no other boiler components are operating.	Control is not receiving 120V power.	Check service switch and/or circuit breaker to boiler turned is on.	Turn on service switch to power boiler.
		Is there 120 Volts at the service switch?	Troubleshoot and correct the power supply to the manual switch.
		Is the ON/OFF POWER SWITCH (inside boiler case) turned on?	Turn ON the manual power switch inside the boiler case.
		Check for 120 volts at the line voltage terminal block located inside the boiler case.	Correct wiring inside the boiler case using the wiring diagram in this manual.
		Inspect the fuse. Replace if necessary.	Replace the fuse with proper part found in the replacement part section of this manual. If fuse blows again recheck wiring per diagram.
Nothing is shown on control panel, but boiler is operating.	Occurs when the communication is lost from the control to the display.	Check for loose connections and proper pin alignment/ engagement on the Control's plug.	Check for continuity on the wire harness from the display to the control. See repair parts section for proper replacement part.
		Cycle power off and on using boiler power switch and check for operation.	Replace with new display module. See repair parts section for proper replacement part.

7.2 Suggested Corrective Actions (continued)

Fault	Condition	Diagnostic	Corrective Action(s)
TEMPERATURE SENSOR	Occurs when a temperature sensor has electrically shorted (SHORT) or has become disconnected (OPEN).	Reset using manual reset screen on control panel. (Power button)	Check all the temperature readings of the boiler on the DIAGNOSTICS - TEMPERATURES menu to determine if any sensors are currently displayed as SHORT or OPEN.
			Check wire harness for loose connections and pin engagement at sensor Connection and Control module.
			If problem persists after checking items above replace Control. Refer to repair parts section for kit number.
FLAME FAULT	Occurs when flame is detected when there should be no flame.	Reset using manual reset screen on control panel. (Power button)	Burner may be operating too hot due to incorrect combustion. Inspect flame and conduct combustion test.
			Check for flame at burner via flame current with burner off. Turn boiler off and watch flame through observation port. If flame continues after shutdown replace gas valve.
BLOWER FAULT	Blower unable to reach required speed or does not reach 0 RPM when turned off.	Reset using manual reset screen on control panel. (Power button)	Check wire harness for loose connections and pin engagement at blower. Connections.
			Boiler in standby mode and blower not running. If BLOWER SPEED is not 0 RPM then replace blower.
			If blower does not rotate during ignition sequence check for 120V power at blower connection. If 120Vac power at blower motor and it doesn't start replace blower. Check power at Control. If 120Vac is not present at Control when boiler is powered replace Control.
IGNITION FAULT	Even if boiler went through 8 ignition attempts, but cannot detect flame	Power off and on.	Dirty burner and/or heat exchanger will cause high back pressure and poor ignition. Visual inspection of flue ways often will not be able to diagnose condition.
			Check incoming gas pressure with boiler off and at Max fire. Adjust within limits on rating label.
			Check for flue pipe and intake pipe restrictions or blockage
			Check burner fasteners and gaskets
			Check air intake pipe and proper propane orifice
GAS VALVE FAULT	The Control has detected a problem with it gas valve output circuit.	Reset using manual reset screen on control panel. (Power button)	Check wire harness connections between gas valve and Control.
			If lockout re-occurs replace Control.

SECTION 8 Maintenance

8.1 Maintenance procedures [Daily]

- Check that the boiler front cover is closed.
The front cover must be installed with both top latches tightened while the boiler is in operation.

- Check the power source.
Make sure that the power cord is correctly connected. The main power line is connected to the manual switch box inside the boiler. (Power line through the strain relief in the top of the boiler casing and fix it.)

- Check the status of the control panel
Check status of the power supply. Please check for any debris on the button.

> ⚠ WARNING
>
> To prevent potential severe personal injury, death or substantial property damage, remove all contaminates or contaminated materials immediately from the area around the boiler.
> If exposed to contaminated materials, call a qualified service technician to inspect the boiler for possible damage from acid corrosion.

> ⚠ WARNING
>
> DO NOT store combustible materials, gasoline or any other flammable vapors or liquids near the Boiler. Remove them immediately or store them other places.

Figure 10. 3” Vent Screens

8.2 Maintenance procedures [Monthly]

- Check the vent pipe.
Visually inspect the flue gas vent piping for any signs of blockage, leakage or deterioration of the piping. Please contact a qualified service technician immediately if you find any problem.

- Check the air inlet and combustion piping.
Visually inspect the entire length of air piping to ensure that all joints are properly sealed.

- Check the air inlet screen.
To remove the combustion air screen (located on the left pipe), remove 2 holding screws and slide out the screen. Clean thoroughly and put back in. Make sure no debvris fell into the boiler. Call your qualified service technician if you notice any problems.

- Check the relief valve.
Inspect the boiler relief valve and the relief valve discharge pipe for any signs of weeping or leakage. If the relief valve often weeps, immediately contact your qualified service technician for inspecting the boiler and system.

- Check the condensate outlet.
While the boiler is running, check the discharge end of the condensate drain tubing. Make sure that no flue gas is escaping from the condensate drain tubing.
If flue gas is continuously escaping, it is a serious problem. Shut off the boiler and immediately. Call your qualified service technician for inspecting the boiler and condensate line. Also, refill the condensate trap if problem persists regularly.

- **Check the vent terminal screen vent** (rodent screen/s).
Replace damaged vent terminals with spare parts. Clean them if neccesary.

- Check the air vent
If the air vent valve at the top of the boiler to make sure that it works without leaking, close cap A fully. Loosen cap “A” one turn to allow vent to operate. If vent does not operate correctly, replace the vent.

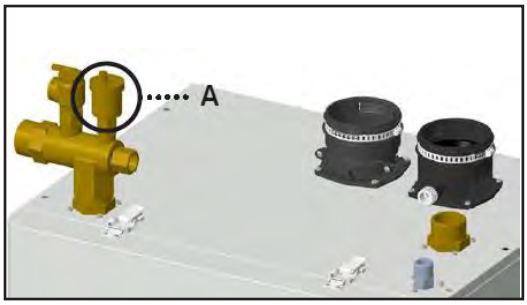

Figure 11. Air Vent

8.3 Maintenance procedures [Every 6 Months]

- Check the boiler piping (gas and water)
Visually inspect for leaks around internal water piping. Also inspect external water piping, circulators, relief valve and fittings. Immediately call a qualified service technician to repair any leaks. Leaks must be repaired by a qualified service technician immediately.
Failure to comply with this instruction could result in severe personal injury, death or substantial property damage.

> ⚠ WARNING
>
> Leaks must be fixed by a qualified service technician immediately. Failure to comply with this instruction could result in severe personal injury, death or substantial property damage. This discharge line must be installed by a qualified heating installer or a service technician.

Before proceeding, verify that relief valve outlet has been piped to a safe place of discharge at full port dimensions within 6 to 12” from a suitable floor drain, avoiding any possibility of scalding from hot water. If water flows freely, release the lever and allow the valve to re-set. Watch the end of the relief valve discharge pipe to ensure that the valve does not weep after the line has had time to drain. If the valve weeps, try again to to re-set the valve. To clean the inside of the burner stage, you should call a qualified service technician.

> Note: Set the burner nuts to a torque value of 56 lbf-in (4.7 lbs-ft) or 65 kgf.cm when tightening these nuts. Do not overtighten.

SECTION 9 Installation Check

9.1 Quick View

- Before Installing
  - Make sure that there is enough space for installing space heating and gas piping. Verify vent/air termination is located as required.
  - Propane boilers require a propane conversion kit, conversion parts and documentation are included.
  - Install Pressure Regulator/Feed Water Valve and Backflow Preventer
  - Check Minimum System Pressure: 15 psig (104 kPa).
  - Install Expansion Tank Sized for the design operating pressure range and check pre-charge pressure.
  - Pressure Relief Valve is 30 psig (207 kPa)

- Install Water Piping
  - Boiler loop piping must be sized to the minimums listed in the Boiler manual. Using smaller piping will cause performance problems.

- Install Vent & Air Piping
  - Slide the air inlet pipe and vent pipe into the Boiler vent connectors.
  - Make sure the terminations are placed as required in the manual and that air intakes are at least 12 inches above normal snow line.
  - Refer to the material check list in this guide for a list of items needed.

- Install Condensate Piping / Tubing & Components
  - Fill out the material check list in this guide to ensure you have the tubing or PVC pipe and all components needed for the condensate piping.
  - Connect internal components that are supplied with the Boiler.

- Install Gas Piping
  - Install a union and shutoff valve.

- Wire the Boiler
  - Connect power wiring and control wiring per boiler manual wiring diagram (See Section 4.16 on page 40)

- Start up, Adjust & Test
  - Follow the Boiler manual instructions to clean the system if needed, then fill and check water chemistry.

Minimum System Pressure: 15 psig (104 kPa).
Pressure Relief Valve: 30 psig (207 kPa)

9.2 Final Check Lists

■ Final check: Installation Conditions.
- Is the Boiler placed level on a floor with sufficient strength?
- Is there a floor drain near the Boiler?
- Are there any combustible materials near the Boiler and vent pipe?
- Is the air supply sufficient for proper operation of the Boiler?
- Are the proper service clearances maintained?
- Is the distance between the Boiler and point of vent termination minimized?
- Is the proper distance from windows, doors, and other intake vents maintained?

■ Final check: Gas pipe installation
- Is the gas supply line equipped with a manual shut off valve near the boiler?
- Is the gas supply line a minimum of 1” NPT up to the gas connection on the boiler
- Is the gas supply line length and diameter adequate to deliver the required BTU’s?
- Has the gas supply line pressure been measured?
- Does the supply gas type match the type indicated on the boiler rating plate?

■ Final check: Air/Vent pipe installation
- Has the Boiler been vented with 3″ or 4” PVC, CPVC, Polypropylene (PP), Stainless Steel or PP Flex Gas Vent (S636 PVC, CPVC) for Category IV appliances in accordance with this manual and/or your local code?
- Is the vent termination at least 12″ above the exterior grade?
- Is the total vent length within the maximum vent length restriction?
- Have you checked the air/vent piping for leaks?
- Have you properly supported the vent termination?
- Are all vent runs properly supported?
- Is the vent sloped upward toward the vent termination at a rate of 1/4″ per foot (2% grade)?

■ Final check: Condensate drain installation
- Have you installed a condensate drain line from the Boiler to a floor drain or under sink discharge point?

■ Final check: Setting the DIP switches for proper vent size and gas type.
- Are all DIP switches correctly set on the main board?
- Have you filled the condensate trap with water or vegetable oil to avoid drying out the trap?
- When required, have you installed a neutralizer and condensate pump (in or near the boiler) and plugged the condensate pump into an electrical outlet?

■ Final check : Connecting the power supply
- Please check that the power is 120V AC.
- Have you checked the polarity of the electrical connection?

■ Final check : Pressure relief valve
- Have you properly installed an approved pressure relief valve on the boiler?

■ Final check : Burner flames
- The burner flame must be checked periodically for a constant proper blue color.
- If the flame does not appear normal, the burner may need to be cleaned.
- If the burner needs to be cleaned, it must be performed by a qualified service technician.

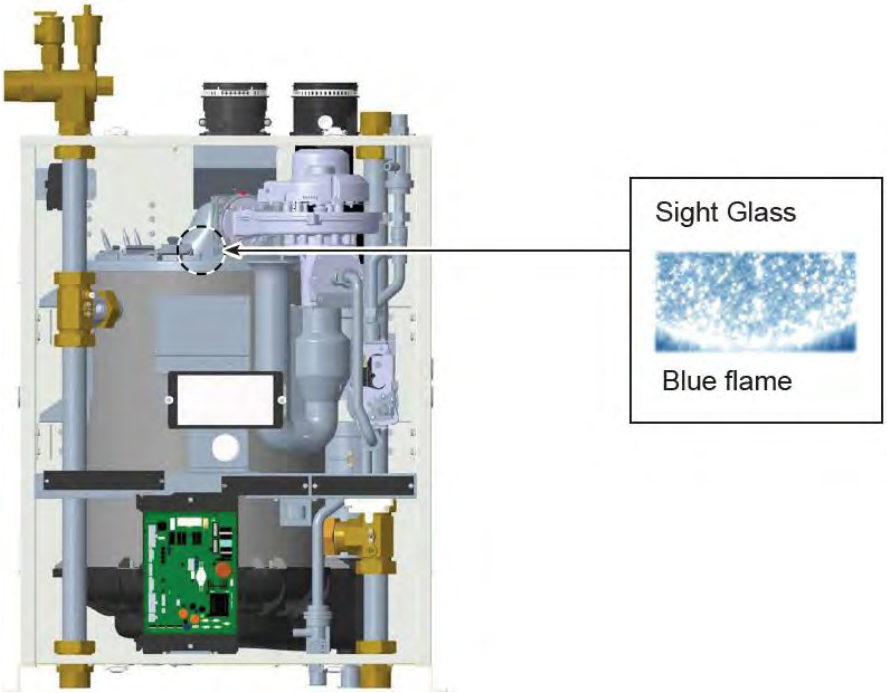

9.3 Freeze Protection

The FTHW301/399 Boilers are certified for indoor use only, and are not design-certified for placement outdoors.

Proper precautions for freeze protection are recommended for boiler installations in areas where the danger of freezing exists.

Power outage, interruption of gas supply, failure of system components, activation of safety devices, etc., may prevent a boiler from firing. **Any time a boiler is subjected to freezing conditions, and the boiler is not able to fire, and/or the water is not able to circulate, there is a risk of freezing in the boiler or in the pipes in the system.** When water freezes, it expands which may result in bursting of pipes, or damage to the boiler, which could result in leaking or flooding conditions.

Some items to consider are

- Consider the effects of reduced heat transfer and an increase in head pressure against the system circulator. As the concentration of glycol increases, heat transfer reduces. To maintain performance similar to 100% water, head loss value must be taken into account in boiler pumps.
- Glycol mixtures should not exceed 50%.
- In order to maintain output similar to 100% water, the circulation flow rate must be increased by more than 5% for 30% glycol, and the circulation flow rate must be increased by more than 10% for 50% glycol.
- If the pump flow rate is not increased depending on the glycol concentration, this can lead to short cycling of the burner.
- The glycol solution should be tested as recommended by the glycol manufacturer but not less than annually. Some items of concern are pH additive breakdown, inhibitor reduction, etc.
- Glycol/antifreeze solutions expand more than water; therefore, system design must take this into account. For example: a 40% by volume solution expands 4.8% in volume for a temperature increase from 32◦F to 180◦F, while water expands 3% over the same temperature rise.

⚠ WARNING

Do NOT use automotive antifreeze or ethylene glycol. Use only inhibited propylene glycol solutions which are specially formulated for hydronic systems. Ethylene glycol is toxic and can attack gaskets, seals, and metallic components used in hydronic systems. A correct glycol concentration and inhibitor level is critical.

⚠ **CAUTION**

It is highly recommended to follow the manufacturers recommended concentrations, expansion requirements, and maintenance recommendations. You must carefully calculate the additional friction loss in the system as well as the reduction in the heat transfer coefficients.

⚠ **NOTICE**

Different glycol products may provide varying degrees of protection. Glycol products must be maintained properly in a heating system, or they may become ineffective. Consult the glycol specifications, or the glycol manufacturer, for information about specific products, maintenance of solutions, and set up according to your particular conditions.

⚠ **NOTICE**

Not all pumps are capable of maintaining the reduced temperature rise required with glycol concentrations greater than 35%.

⚠ **NOTICE**

Do not exceed a 50% glycol concentration by volume as it may result in short cycling of the burner.

This page intentionally left blank.

SECTION 10 Parts FTHW301/399 Casing Assembly

No.	Description	Part Number
1	Air Intake Collar Ass'y (filter type)	FT3010
1-1	Band, Exhaust Duct (100Φ)	FT1603
1-2	Packing, Exhaust Outlet Adapter	FT1604
1-3	Adapter, Air intake	FT3011
1-4	Filter, Air Intake	FT3012
1-5	Packing, Air Filter	FT3013
B-0	M4 x 14MM Flange Bolt	*
2	Adapter Ass'y, Exhaust Outlet	FT3015
2-1	Band, Exhaust Duct (100Φ)	FT1603
2-2	Packing, Exhaust Outlet Adapter	FT1604
2-3	Adapter, Exhaust Outlet	FT3016
2-4	Exhaust testing cap	FT4121
O-1	O-Ring P75	FT1609
O-2	O-Ring P7	FT1601
3	Adapter, In-Outlet	FT4001
4	Gas Adaptor Ass'y	FT4107
5	Adapter, In-Outlet	FT4001
6	Sensor, CO	FT4003
7	Bracket, Air Guide	FT4004
8	Bracket, Ignition	FT4005
9	Ignition Transformer	FT2031
10	Bracket, HE Horizontal	FT4006
11	Pad, Hex Support	FT4007
12	Bracket, Heat Exchanger	FT4008
13	Bracket, Main Panel	FT4009

14	Pressure Gauge	FT1628
14-1	Bracket, Pressure Gauge	FT4108
14-2	Ring, Pressure	FT4159
P-0	3/8" Packing	FT3062
15	Control, Display	FT4010
16	Bracket, Front Panel	FT4011
17	Terminal Block (15P)	FT4012
17-1	Terminal Block (10P)	FT3026
17-2	Terminal Block (12P)	FT4013
18	Transformer, Power	FT3024
19	Air Pressure sensor (80)	FT1804
20	Bracket, Main PCB	FT4014
21	Main PCB	FT4015
22	Adapter, In-Outlet	FT4001
23	Gas Adaptor Ass'y	FT4109
24	Adapter, In-Outlet	FT4001
25	Packing, Condensate Trap	FT4016
26	Bracket, Condensate Trap	FT4017
27	Bracket, Wall Mount	FT4018
28	Bracket, Wall Mount Bottom	FT4019
29	Handle, Case Side	FT4020
30	Cover, Front	FT4021
30-1	Deco, Design	FT4022

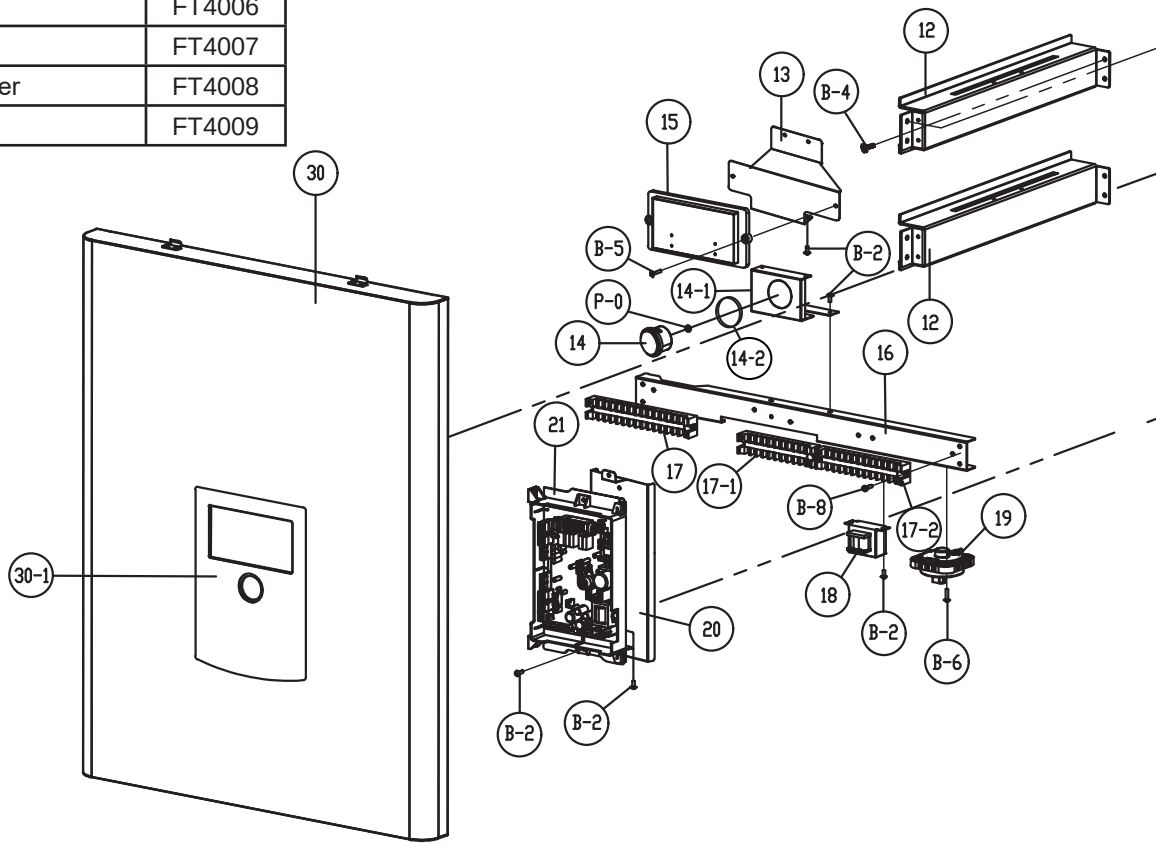

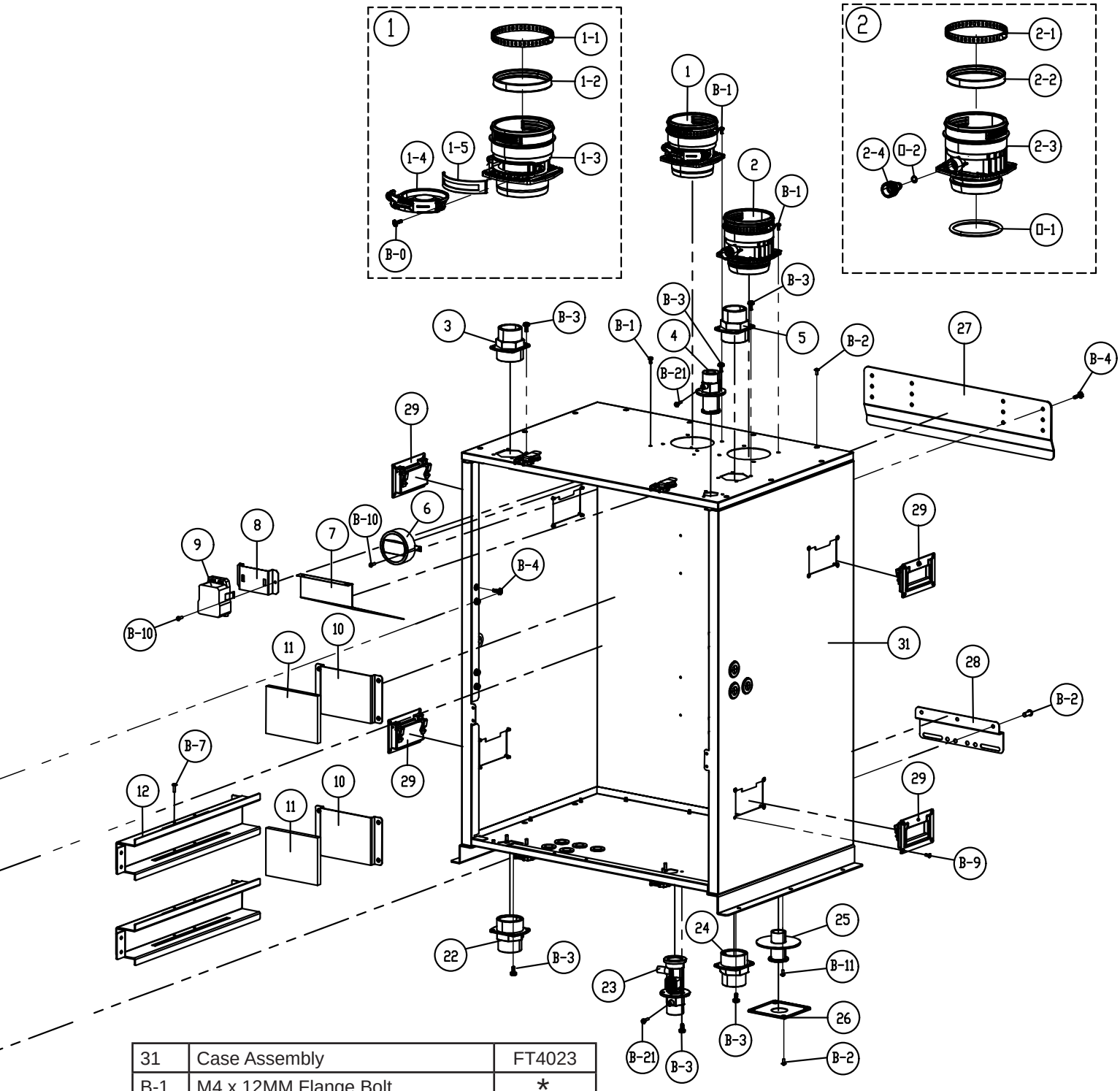

31	Case Assembly	FT4023
B-1	M4 x 12MM Flange Bolt	*
B-2	Truss Head Screw M4 x 12 Tapping	*
B-3	M5 x 10 Flange Bolt Machine	*
B-4	Hex Head M6 x 15 Flange Bolt	*
B-5	Truss Head M4 x 14 Tapping Screw	*
B-6	Truss Head M4 x 16 Tapping	*
B-7	Truss Head Screw M5 x 14 Tapping	*
B-8	Pan Head Screw M4 x 16 Tapping	*
B-9	Flat Head Screw M4 x 8 Tapping	*
B-10	Truss Head Screw M4 x 8 Machine	*
B-11	Truss Head Screw M4 x 10 Tapping	*
B-21	Truss Head Screw M4 x 10 Machine	*

*standard hardware

FTHW301/399 **Water Pipe Assemblies**

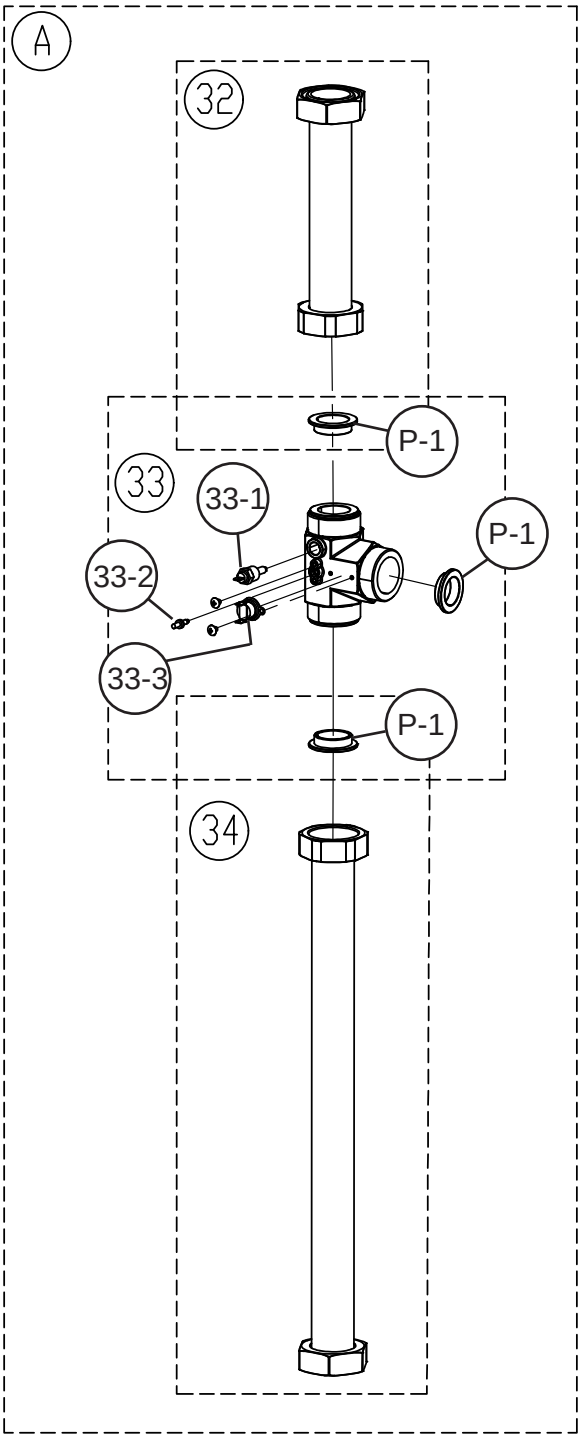

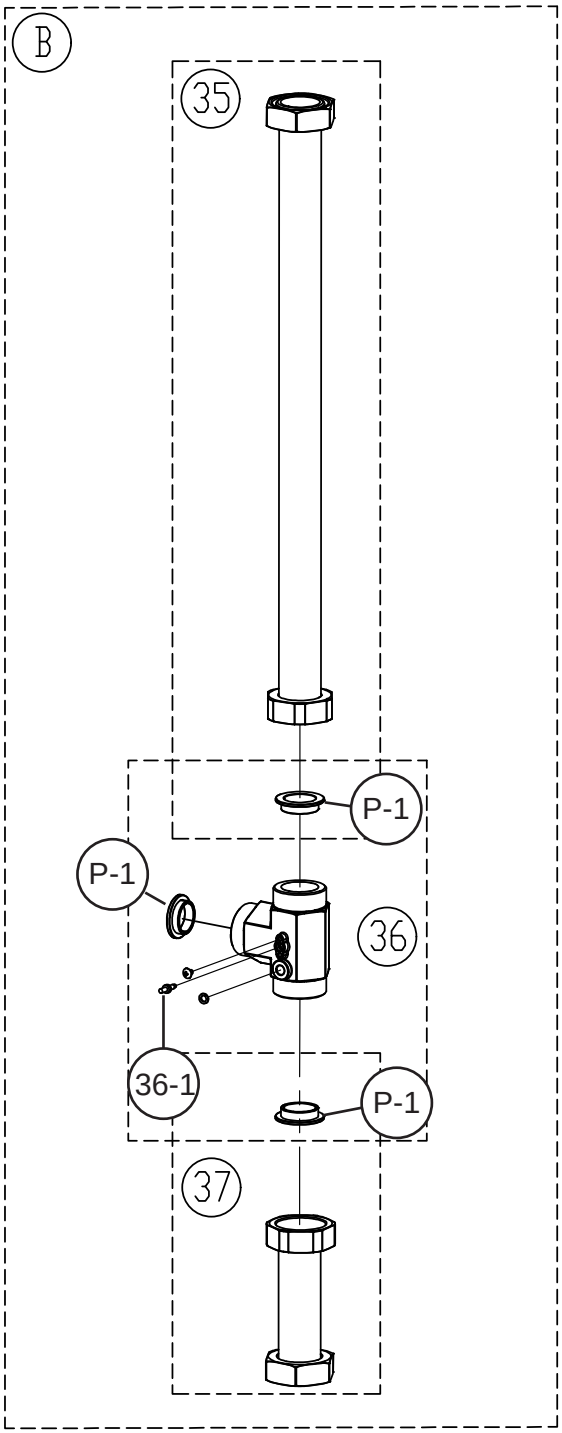

No.	Description	Part Number
A	Piping, Water Supply Ass'y	FT4124
32	**Piping, Water Supply Top Ass'y**	**FT4032**
33	**Adapter, Water Supply Ass'y**	**FT4033**
33-1	Sensor, Low Water Cut-Off	FT1325
33-2	Sensor, Supply Water Temperature	FT4035
33-3	Sensor, Overheat Shut-Off Switch	ST1052
34	Piping, Water Supply Bottom Ass'y	FT4037
B	Piping, Water Return Ass'y	FT4125
35	**Piping, Water Return Top Ass'y**	**FT4043**
36	**Adapter, Water Return Ass'y**	**FT4044**
36-1	Sensor, Temp	FT4045
37	Piping, Water Return Bottom	FT4046
P-1	Packing, Water Pipe	FT4038

FTHW301/399 Gas Train and Blower

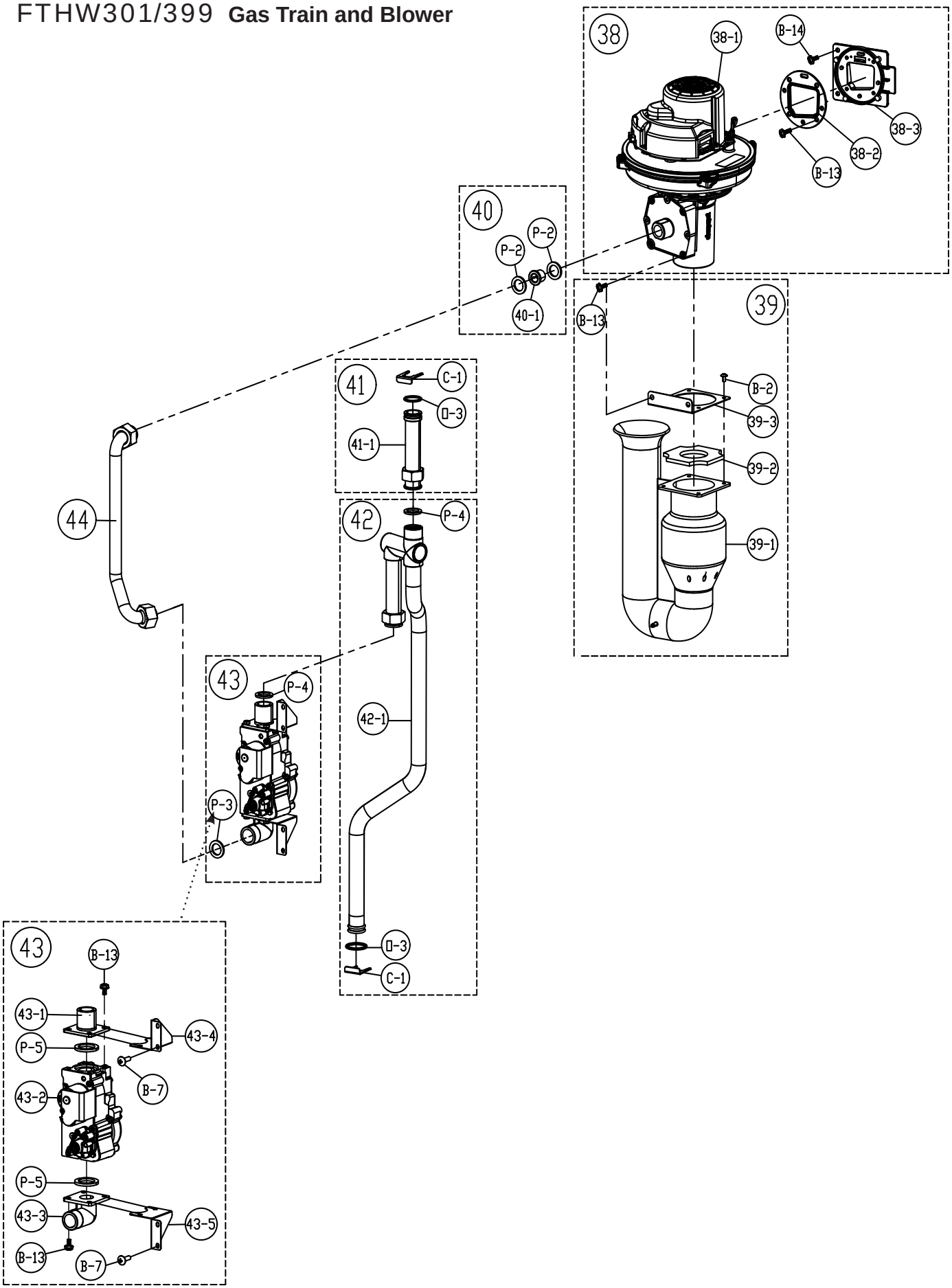

No.	Description	Part Number
38	**Fan Ass'y, EBM**	**FT4047**
38-1	Fan	FT4048
38-2	Packing, Fan	FT4049
38-3	Damper, Body Assembly	FT4160
38-4	Damper, Flap	FT4051
B-13	Hex Head Bolt M5 x 12 Machine	*
B-14	Hex Head M5 x 16 Machine Screw	*
39	**Venturi, Intake Pipe Ass'y**	**FT4116**
39-1	Venturi, Intake Pipe	FT4053
39-2	Pad, Intake Pipe	FT4117
39-3	Bracket, Intake Pipe	FT4052
B-2	Truss Head Screw M4 x 12 Tapping	*
B-13	Hex Head Bolt M5 x 12 Machine	*
40-1	NOZZLE, GAS ASS'Y 301K (NG) 6.55 mm	FT4143
	NOZZLE, GAS ASS'Y 399K (NG) 6.70 mm	FT4118
	NOZZLE, GAS ASS'Y Both (LP) 5.40 mm	FT4119
P2	Packing, Nozzle, Gas	FT4056
P2	Packing, Nozzle, Gas	FT4056
41	**Piping, Gas Top Ass'y**	**FT4147**
41-1	Piping, Gas Top	
C-1	Gas Pipe Clip	FT4146
O-3	Quad Ring P-22 (NBR)	FT4161
42	**Piping, Gas Drip Leg Ass'y**	**FT4148**
42-1	Piping, Gas Drip Leg	
O-3	Quad Ring P-22 (NBR)	FT4161
P-3	Flat Ring	FT4064
43	**Gas Valve Ass'y**	**FT4065**
43-1	Adapter, Gas Valve Top	FT4066
43-2	Gas Valve	FT4067
43-3	Adapter, Gas Valve Bottom	FT4068
43-4	Bracket, Gas Valve Bottom	FT4069
43-5	Bracket, Gas Valve Top	FT4070
B-7	Truss Head Screw M5 x 14 Tapping	*
B-13	Hex Head Bolt M5 x 12 Machine	*
P-4	Packing, Gas Valve	FT4071
44	**Piping, V/V**	**FT4072**

*standard hardware

FTHW301/399

Heat Exchanger and Burner Assemblies

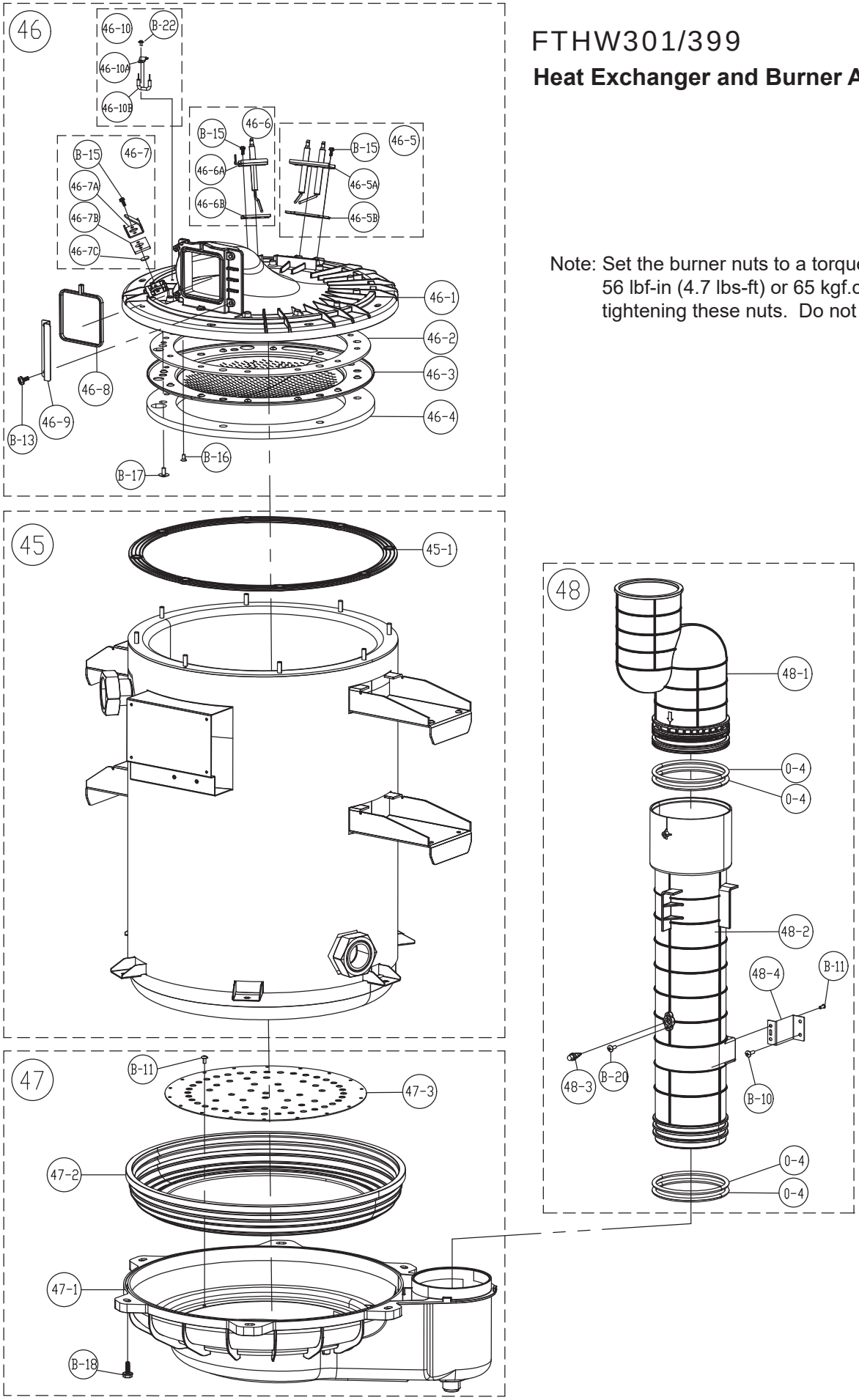

Note: Set the burner nuts to a torque value of 56 lbf-in (4.7 lbs-ft) or 65 kgf.cm when tightening these nuts. Do not overtighten.

No.	Description	Part Number
45	Heat Exchanger Ass'y (301)	FT4099
	Heat Exchanger Ass'y (399)	FT4101
45-1	Packing, Mix Chamber	FT4100
46	**Burner Head, Mix Chamber Ass'y**	FT4073
46-1	Burner Head, Mix Chamber	FT4074
46-2	Packing, Burner	FT4075
46-3	Burner Ass'y	FT4076
46-4	Insulation Board	FT4077
46-5	Ignition Rod Ass'y	FT4102
46-5A	Ignition Rod	FT4078
46-5B	Packing, Ignitor	FT4079
B-15	Hex Screw, M4 x 10 Machine	*
46-6	Flame Rod Ass'y	FT4103
46-6A	Flame Rod	FT4081
46-6B	Packing, Gasket	FT4082
46-7	Bracket, Flame Window Ass'y	FT4104
46-7A	Bracket, Flame Window	FT4083
46-7B	Packing, Gasket	FT4082
46-7C	Glass, Flame Window	FT4084
46-8	Packing, Fan Adaptor	FT4085
46-9	Bracket, Fan Side	FT4086
46-10	Thermal Fuse Ass'y	FT4154
46-10A	Thermal Fuse Bracket	FT4156
46-10B	Thermal Fuse	FT4155
B-22	Truss Head Screw M3 x 6 Machine	*
B-13	Flange Bolt + M/S, M5 x 12 Machine	*
B-16	Flat Head Screw M4 x 8	*
B-17	Flat Head Screw M5 x 10	*
47	**Condensate Collector Ass'y**	**FT4094**
47-1	Condensate Collector	FT4095
47-2	Packing, Condensate Collector	FT4096
47-3	Distributor, Exhaust Gas	FT4097
B-18	Hex Head M5 x 15 Flange Bolt	*
B-11	Truss Head Screw M4 x 10 Tapping	*
48	**Duct, Exhaust Ass'y**	**FT4089**
48-1	Duct, Exhaust Gas Pipe Top	FT4090
48-2	Duct, Exhaust Gas Pipe Bottom	FT4091
48-3	Exhaust overheat sensor	FT1307
48-4	Bracket, Exhaust Gas Pipe	FT4120
B-11	Truss Head Screw M4 x 10 Tapping	*
B-10	Truss Head Screw M4 x 6 Tapping	*
0-4	O-Ring P100	FT4093
B-20	Truss Head Screw M4 x 9	*

* standard hardware

FTHW301/399 **Accessory Items**

No.	Description	Part Number
1	Pressure Relief Valve	FT1500
2	Air Vent	FT3117
3	Outdoor Temp. Sensor	FT1501
4	Bird Screen 3” (Qty 2)	FT1730
5	$^{3}/_{4}$” Brass Plug (Qty 2)	FT3119
6	Brass Adaptor	FT4129
7	PF 1-$^{1}/_{2}$” Brass Plug	FT4130
8	$^{3}/_{4}$” x 1-$^{1}/_{2}$” Brass Cap	FT4131
9	Wall Bracket	FT4132
10	Wall Bracket Pad	FT4133
11	Condensate Trap Assembly	FT4134
12	Condensate Hose Kit	FT4136
13	Cable Gland (Qty 4)	FT4137
14	Spare Parts Kit	FT4138
15	LP conversion kit	FT4141
16	Wire Harness	FT4142
17	Bacnet Cable	FT4164

For Product and Service VIDEOS

Dimensions and specifications subject to change without notice in accordance with our policy of continuous product improvement.

H2430300B

Customer Service and Product Support: **800.900.9276 • Fax 800.559.1583**
20 Industrial Way, Rochester, NH, USA 03867

23-12 Document 1538B