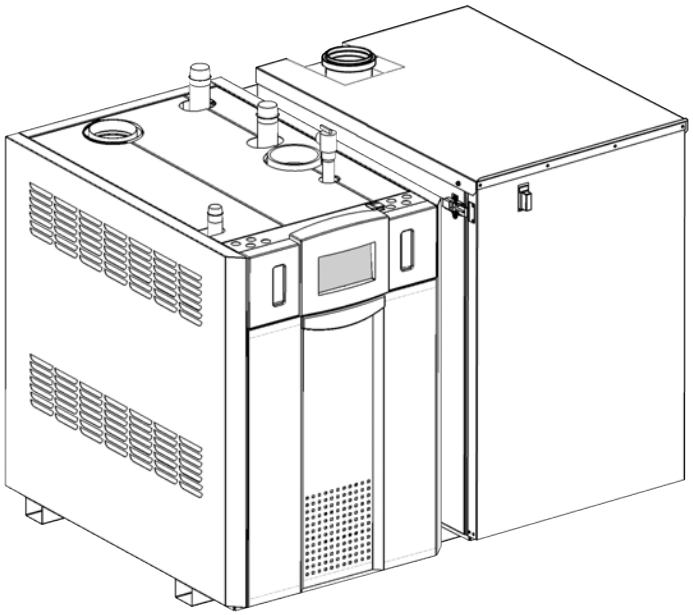

Installation and Operation Instructions for

NEOTHERM®

with Touchscreen

Modulating Boilers and Volume Water Heaters

Indoor and Outdoor

NTH Sizes 399 – 850 MBTU/h
NTV Sizes 150 – 850 MBTU/h

FOR YOUR SAFETY: This product must be installed and serviced by a professional service technician, qualified in hot water boiler and heater installation and maintenance. Improper installation and/or operation could create carbon monoxide gas in flue gases which could cause serious injury, property damage, or death. Improper installation and/or operation will void the warranty.

⚠ WARNING

If the information in this manual is not followed exactly, a fire or explosion may result causing property damage, personal injury or loss of life.

Do not store or use gasoline or other flammable vapors and liquids in the vicinity of this or any other appliance.

WHAT TO DO IF YOU SMELL GAS

- Do not try to light any appliance.
- Do not touch any electrical switch; do not use any phone in your building.
- Immediately call your gas supplier from a nearby phone. Follow the gas supplier's instructions.
- If you cannot reach your gas supplier, call the fire department.

Installation and service must be performed by a qualified installer, service agency, or gas supplier.

⚠ AVERTISSEMENT

Assurez-vous de bien suivres les instructions données dans cette notice pour réduire au minimum le risque d'incendie ou d'explosion ou pour éviter tout dommage matériel, toute blessure ou la mort.

Ne pas entreposer ni utiliser d'essence ni d'autres vapeurs ou liquides inflammables dans le voisinage de cet appareil ou de tout autre appareil.

QUE FAIRE SI VOUS SENTEZ UNE ODEUR DE GAZ:

- Ne pas tenter d'allumer d'appareils.
- Ne touchez à aucun interrupteur. Ne pas vous servir des téléphones dansle bâtiment où vous êtes.
- Appelez immédiatement votre fournisseur de gaz depuis un voisin. Suivez les instructions du fournisseur.
- Si vous ne pouvez rejoindre le fournisseur de gaz, appelez le sservice des incendies.

L'installation et l'entretien doivent être assurés par un installateur ou un service d'entretien qualifié ou par le fournisseur de gaz.

H2374100K

LAARS® Heating Systems Company

Table of Contents

SECTION 1
GENERAL INFORMATION

1.A Introduction 5
1.B Warranty 5
1.C Model Identification 5
1.D Safety Notes 6
1.E Model Overview 8
1.F Dimensions, Indoor Models 14
1.G Dimensions, Outdoor Models 16
1.H The Installation Kit (installation parts box). 18

SECTION 2
LOCATING THE UNIT

2.A General Information 20
2.B Locating Appliance for Correct Vent Distance from Outside Wall or Roof Termination 20

SECTION 3
VENTING AND COMBUSTION AIR

3.A General Venting 21
3.B Combustion Air 21
3.C Venting 24
3.D Common Venting 26
3.E Locating Vent and Combustion Air Terminals . 26
3.F Common Vent Test 30

SECTION 4
GAS SUPPLY AND PIPING 31

SECTION 5
PUMP REQUIREMENTS

5.A Boiler Flow and Head Requirements - Boiler . 32
5.B Water Heater Flow and Head Requirements - Heater 32

SECTION 6
WATER CONNECTIONS

6.A Boiler 34
6.A.1 Boiler Water Piping 34
6.A.2 Boiler Cold Water Make-Up 34
6.A.3 Condensate Drain 35
6.A.4 Freeze Protection 35
6.A.5 Boiler Suggested Piping Schematics 35
6.A.6 Recognized Chemicals 36

6.B Water Heater 42
6.B.1 Heater Water Quality 42
6.B.2 Piping Requirements 42
6.B.3 Cold Water Make-Up 42
6.B.4 Condensate Drain 42
6.B.5 Freeze Protection 42
6.B.6 Heater Suggested Piping Schematics 42
6.B.7 Heater Suggested Pumps 43

SECTION 7
INSTALLATION AND WIRING

7.A Installation Warnings 45
7.B Main Power Connections 45
7.B.1 Pump Connections and Operation 45
7.B.2 Vari-Prime (optional variable speed pump control) 46
7.C Hydronic Heating Using External Modulation Control 46
7.D Optional Field Connections 46
7.E Lead Lag Connections 48
7.F Building Automation System Connections 49
7.G System Wiring Diagram 51
7.H Ladder Diagram 52

SECTION 8
USING THE TOUCH SCREEN

8.A The Touch Screen 53
8.B Using the Touch Screen 53
8.C Login (required for some parameters) 54
8.D Verification Process for Safety-Related Parameters 55
8.E Checking Individual Parameters 56
8.F Setting the Date and Time 57
8.G The Configuration Menu 58
8.G.1 System Identification & Access 59
8.G.2 Heat Configuration 59
8.G.2.a CH - Central Heat Configuration 59
8.G.2.b Setting Up 4-20 mA Setpoint 59
8.G.3 Outdoor Reset Configuration 60
8.G.4 DHW - Domestic Hot Water Config 60
8.G.5 Warm Weather Shutdown Config 60
8.G.6 Demand Priority Configuration 61
8.G.7 Modulation Configuration 61
8.G.8 Pump Connections 61
8.G.9 Statistics Configuration 62
8.G.10 High Limits 62
8.G.11 Stack Limits 62
8.G.12 Anti-Condensation Configuration 62
8.G.13 Frost Protection 62
8.G.14 System Configuration 62
8.G.15 Fan Configuration 63
8.G.16 Sensor Configuration 63
8.G.17 Lead Lag Follower Configuration 64
8.G.18 Lead Lag Leader Configuration 66
8.G.18.a About Lead Lag Operation 69
8.H Configure for a Building Automation System 71
8.I Combustion Setup 72
8.J Adjusting CO_2 74

SECTION 9
FIRST START UP AND ADJUSTMENT

9.A Filling the Boiler System 77
9.B First Operation 78
9.C Shutting Down the Unit 78
9.D Restarting the Unit 78

SECTION 10
MAINTENANCE

10.A System Maintenance 79
10.B Appliance Maintenance and Component Description 79
10.C Battery Backup for Date & Time 82
10.D Gas Conversion 83

SECTION 11
TROUBLESHOOTING

11.A About Lockouts, Holds, and Alerts 84
11.A.1 Responding to a Lockout, Hold, or Alert 84
11.A.2 Viewing the Lockout and Alert Histories 84
11.B Troubleshooting Table ..... 86 - 94
11.C Diagnostic Tests and Input/Output Indicators .. 94
11.D Lead Lag Follower Diagnostics 95
11.E Statistics 95
11.F Analysis 95
11.G Control Snapshot 95
11.H Operating Sequence 96

SECTION 12
REPLACEMENT PARTS

12.A General Information 96
12.B Parts List 96-99
12.C Parts Illustrations 99-106

LAARS®
Heating Systems Company

SECTION 1
GENERAL INFORMATION

1.A Introduction

This manual provides information necessary for the installation, operation, and maintenance of LAARS Heating Systems NeoTherm boilers and water heaters. Read it carefully before starting the installation.

All application and installation procedures should be reviewed completely before proceeding with the installation. Consult the LAARS Heating Systems factory, or local factory representative, with any problems or questions regarding this equipment. Experience has shown that most operating problems are caused by improper installation.

NeoTherm is protected against over pressurization. A pressure relief valve is included with each NeoTherm. Some NeoTherms may require that the PRV be installed prior to filling the system. Refer to Figures 2-9 for PRV locations.

1.B Warranty

LAARS Heating Systems NeoTherms are covered by a limited warranty. The owner should complete the warranty registration at www.Laars.com.

All warranty claims must be made to an authorized LAARS Heating Systems representative. Claims must include the serial number and model (this information can be found on the rating plate), installation date, and name of the installer. Shipping costs are not included in the warranty coverage.

NOTE: Throughout the content of this manual, the NeoTherm will be referred to as a 'unit'. unit = NeoTherm

1.C Model Identification

Consult the **Rating Plate** on the side of the unit. The following information describes the Model Identification (Model Nomenclature).

(1-2) **Model Series Designation**
N T = NeoTherm

(3) **Usage**
H = Hydronic
V = Volume Water

(4-6) **Size**
1 5 0 = 150,000 BTU/hr input, NTV only
1 9 9 = 199,000 BTU/hr input, NTV only
2 8 5 = 285,000 BTU/hr input, NTV only
3 9 9 = 399,000 BTU/hr input
5 0 0 = 500,000 BTU/hr input
6 0 0 = 600,000 BTU/hr input
7 5 0 = 750,000 BTU/hr input
8 5 0 = 850,000 BTU/hr input

(7) **Fuel**
N = Natural Gas
P = LP Gas

(8) **Options Code**
X = Standard US
J = CSD-1, FM, GAP, (U.S. size 500-850 only)
C = Standard Canada
D = CSD-1 (Canada 500-800 only)
E = OUTDOOR (U.S.)
F = OUTDOOR (Canada NTH 399-850 only)
G = CSD-1, OUTDOOR (U.S. 500-850 only)
H = CSD-1, OUTDOOR (Canada 500-850 only)

(9) **Pump Options**
N = Pump included (N/A for outdoor NTV 750 & 850)
X = No pump
W= HLW w/ Pump (NTV only)
L = HLW w/out Pump (NTV only)

(10) **Revision**
3 = Third version

Model Nomenclature

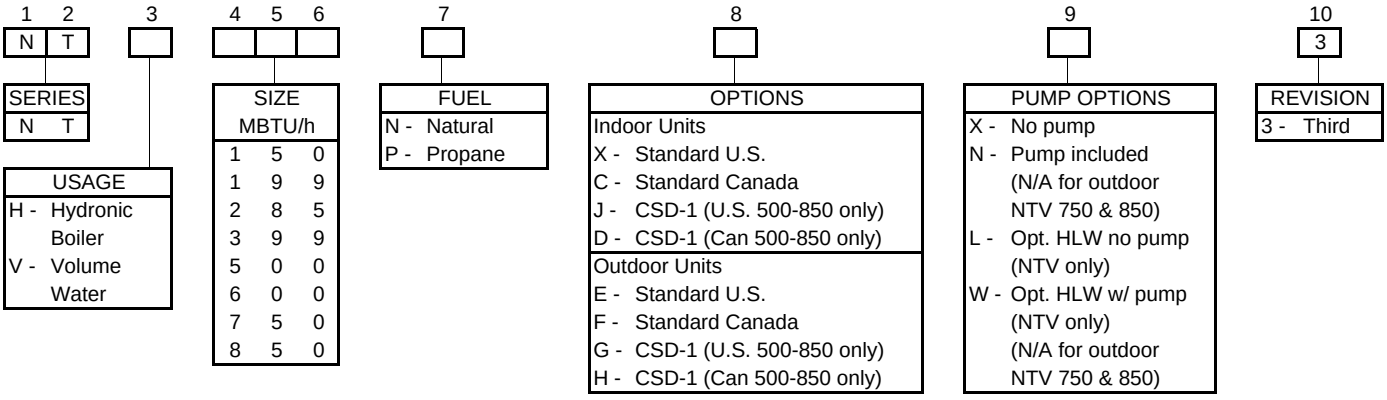

1.D Safety Notes

Safety notes are used throughout this manual to bring attention to the presence of hazards with various risk levels and to offer important information concerning the life of this product. There are 3 basic types.

1	⚠ WARNING	Indicates an imminently hazardous situation which, if not avoided, can or will result in death or serious injury and can or will result in catastrophic property damage.
2	⚠ CAUTION	Indicates a potentially hazardous situation which, if not avoided, may result in moderate injury and/or property damage.
3	NOTE:	Indicates instructions that are important to that topic but not related to personal injury or property damage.

⚠ WARNING

- Water temperature over 125°F (52°C) can cause severe burns instantly or death from scalds.
- Children, disabled and elderly are at highest risk of being scalded.
- See instruction manual before setting temperature at the unit.
- Feel water before bathing or showering.
- If this unit is used to produce water that could scald if too hot, such as domestic hot water use, adjust the outlet control (limit) or use temperature limiting valves to obtain a maximum water temperature of 125°F (52°C).

⚠ WARNING

Fire or Explosion Hazard

Improper configuration can cause fuel buildup and explosion. Improper user operation may result in property loss, severe physical injury, or death.

Any change to safety-related configuration parameters must only be done by experienced and/or licensed burner/boiler operators and mechanics.

Should overheating occur or the gas supply fails to shut off, turn off the manual gas control valve to the appliance.

If any odor of gas is detected, or if the gas burner does not appear to be functioning in a normal manner, close the main gas shutoff valve. Do not shut off the power switch. Contact your heating contractor, gas company, or factory representative.

⚠ AVERTISSEMENT

En cas de surchauffe ou si l'alimentation en gaz ne s'arrête pas, fermez.

⚠ WARNING

This unit must be installed in accordance with the procedures detailed in this manual, or the manufacturers warranty will be voided. The installation must conform to the requirements of the local jurisdiction having authority, and, in the United States, to the latest edition of the National Fuel Gas Code, ANSI Z223.1/NFPA54. In Canada, the installation must conform to the latest edition of CSA B149.1 Natural Gas and Propane Gas Installation Code, and/or local codes. Where required by the authority having jurisdiction, the installation of these units must conform to the Standard for Controls and Safety Devices for Automatically Fired Boilers, ANSI/ASME CSD-1. Any modifications to the boiler, its gas controls, or wiring may void the warranty. If field conditions require modifications, consult the factory representative before initiating such modifications.

⚠ WARNING

Carbon Monoxide Hazard

This product burns gas to produce heat. The appliance must be properly installed, operated, and maintained to avoid exposure to appreciable levels of carbon monoxide.

The installer must verify that at least one carbon monoxide alarm has been installed within a residential living space or home following the alarm manufacturer's instructions and applicable local codes before putting the appliance into operation. It is important for carbon monoxide alarms to be installed, maintained, and replaced following the alarm manufacturer's instructions and applicable local codes.

⚠ AVERTISSEMENT

L'installateur est tenu de vérifier qu'au moins une alarme de détection de monoxyde de carbone soit installée dans un espace résidentiel ou dans un domicile conformément aux directives du fabricant de l'alarme et aux codes locaux applicables avant de mettre l'appareil en service.

⚠ WARNING

Electrical Shock Hazard

Electrical shock can cause severe injury, death or property damage. Disconnect the power supply before beginning installation or changing the wiring to prevent electrical shock or damage to the equipment. It may be necessary to turn off more than one power supply to disconnect.

All electrical wiring is to be done in accordance with local codes, or in the absence of local codes, with: 1) The National Electrical Code ANSI/NFPA No. 70 - latest Edition, or 2) CSA STD. C22.1 "Canadian Electrical Code - Part 1." This appliance must be electrically grounded in accordance with these codes.

⚠ WARNING

The Repair Parts list designates parts that contain refractory ceramic fibers (RCF). RCF has been classified as a possible human carcinogen. When exposed to temperatures above 180ºF, such as during direct flame contact, RCF changes into crystalline silica, a known carcinogen. When disturbed as a result of servicing or repair, these substances become airborne and, if inhaled, may be hazardous to your health.

Do not remove or replace RCF parts or attempt any service or repair work involving RCF without wearing the following protective gear:

1. A National Institute for Occupational Safety and Health (NIOSH) approved respirator.
2. Long sleeved, loose fitting clothing.
3. Gloves.
4. Eye Protection.

⚠ WARNING

CANCER AND REPRODUCTIVE HARM.
WWW.P65WARNINGS.CA.GOV.

AS REQUIRED BY THE STATE OF CALIFORNIA PROPOSITION 65.

⚠ CAUTION

The supply voltage to this unit must not be disengaged, except for service or isolation, or unless otherwise instructed by procedures outlined in this manual. To signal a call for heat, use the correct terminals as instructed in SECTION 7 of this manual.

⚠ CAUTION

CO needs to be less than 150 ppm.

⚠ ATTENTION

Le CO doit être inférieur à 150 ppm.

NOTE: All installations must be made in accordance with 1) American National Standard Z223.1/NFPA54-Latest Edition "National Fuel Gas Code" or 2) CSA B149.1 "Natural Gas and Propane Installation Code" or in Canada reference the B149.1 latest edition and with the requirement of the local utility or other authorities having jurisdiction. Such applicable requirements take precedence over the general instructions contained herein. All electrical wiring is to be done in accordance with the local codes, or in the absence of local codes, with: 1) The National Electrical Code ANSI/NFPA No. 70-latest Edition, or 2) CSA STD. C22.1 "Canadian Electrical Code - Part 1". This appliance must be electrically grounded in accordance with these codes.

NOTE: A pressure relief valve is included with each unit and must be installed prior to filling the system.

1.E Model Overview

These units are offered in both Indoor and Outdoor models for all sizes.

NOTE: Outdoor Installation of volume water heaters not permitted in Canada.

The physical appearance of the indoor and outdoor units is drastically different because the outdoor model offers a fully weathertight enclosure that hides the touchscreen. Whereas the indoor model is not fully weathertight and the touchscreen can be accessed without having to open the unit. See Figure 1 through Figure 9.

Both the indoor and the outdoor models have the On/Off switch on the outside of the unit.

Both also have the Rating Plate on the outside panel to the right. See Figure 8 on page 12

The only component (interior) difference between the indoor and outdoor models is that all of the piping for the outdoor model, with the exception of the exhaust vent, is at the BACK of the unit. Figure 9 on page 13

The gas connection, the air inlet, and the water inlet and outlet are all at the back of the unit. This is consistent for all sizes.

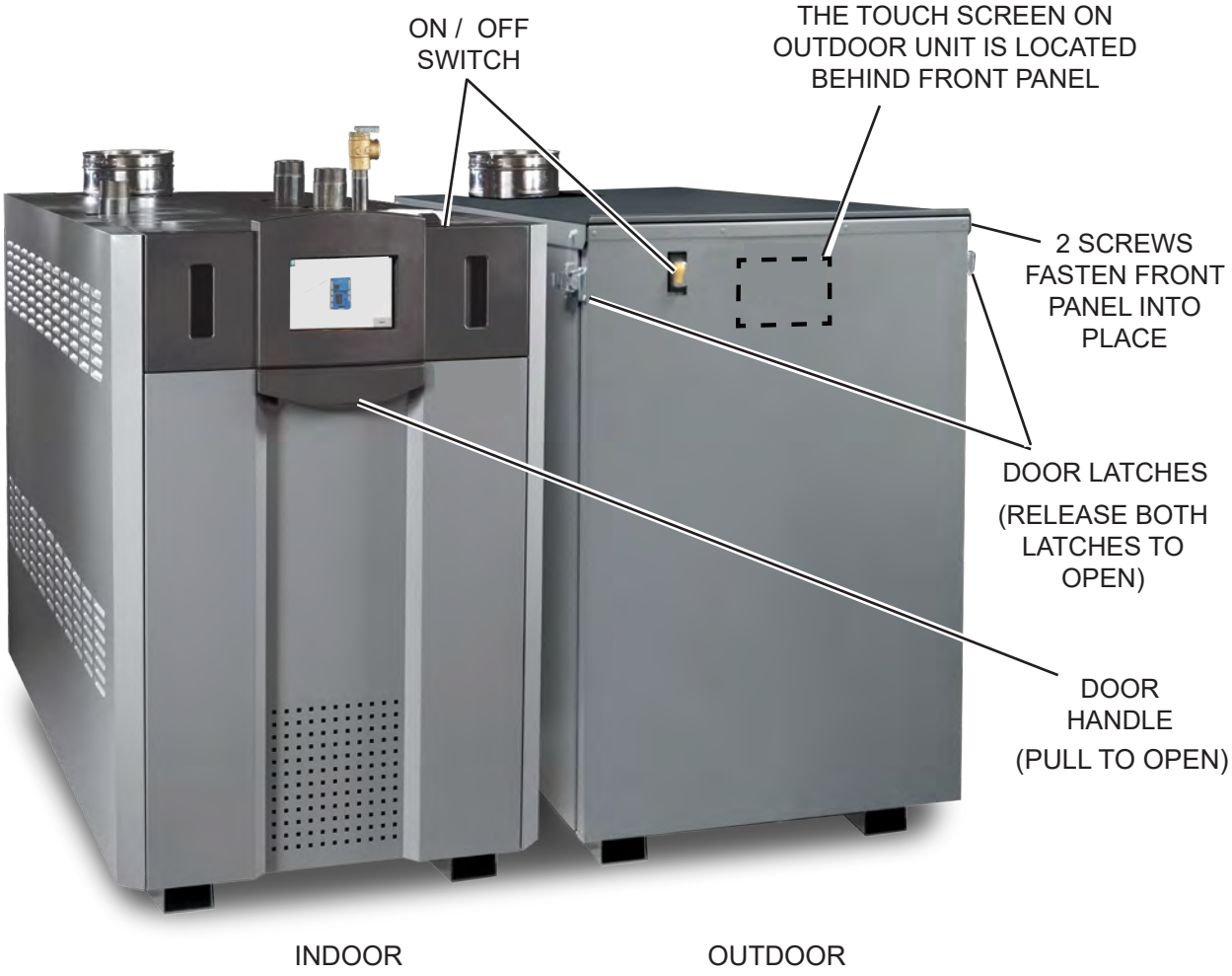

Figure 1. All models open from the front

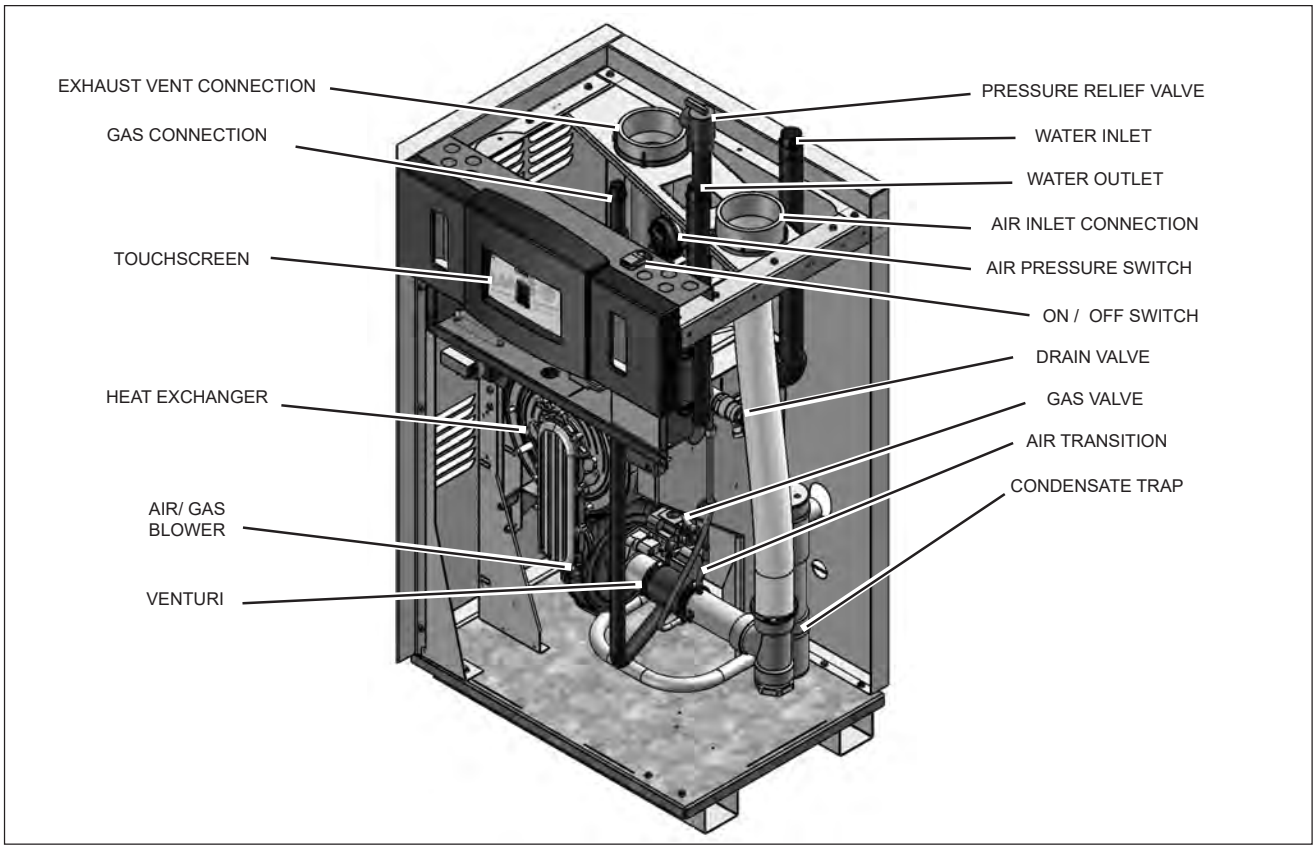

Figure 2. Location of Components, Sizes 150-199

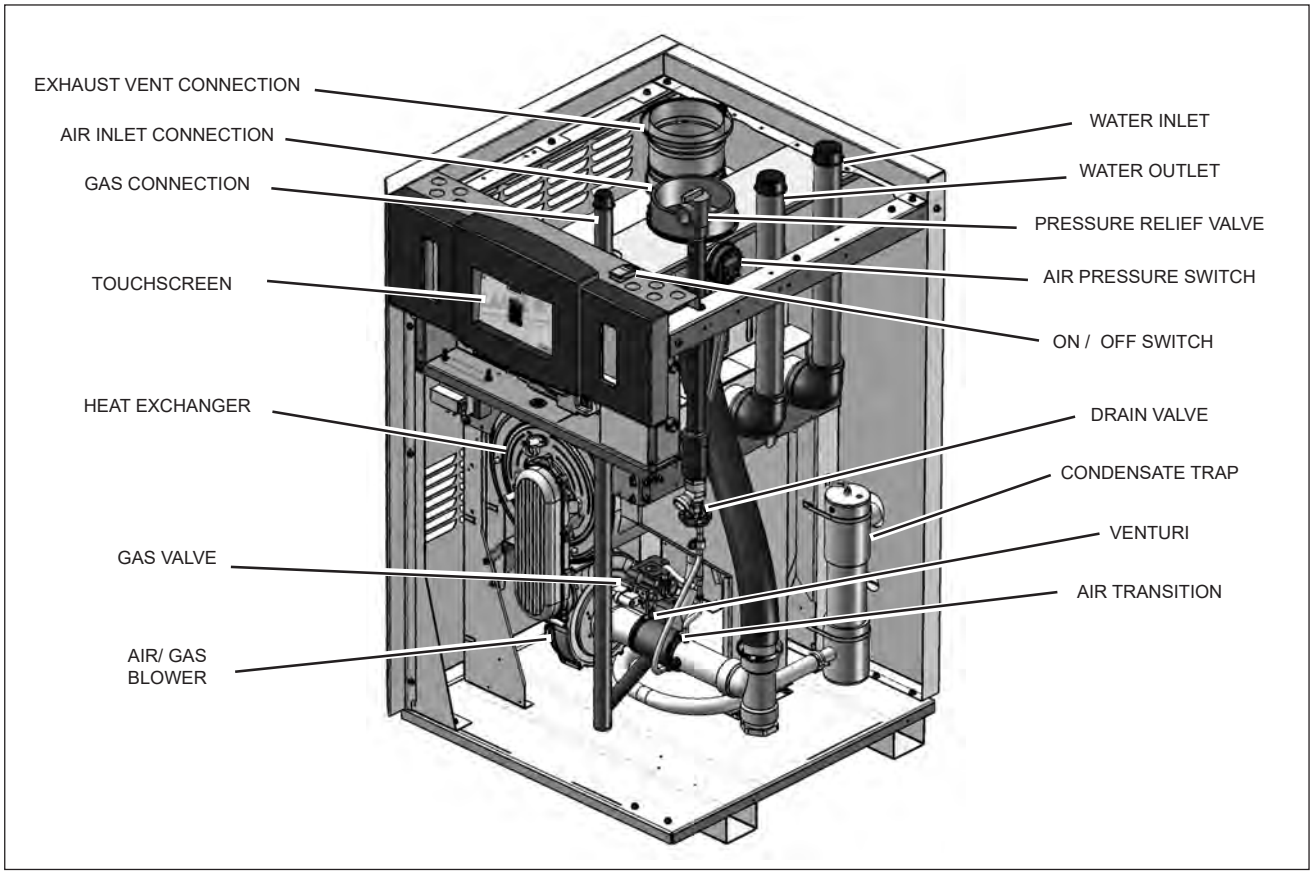

Figure 3. Location of Components, Size 285

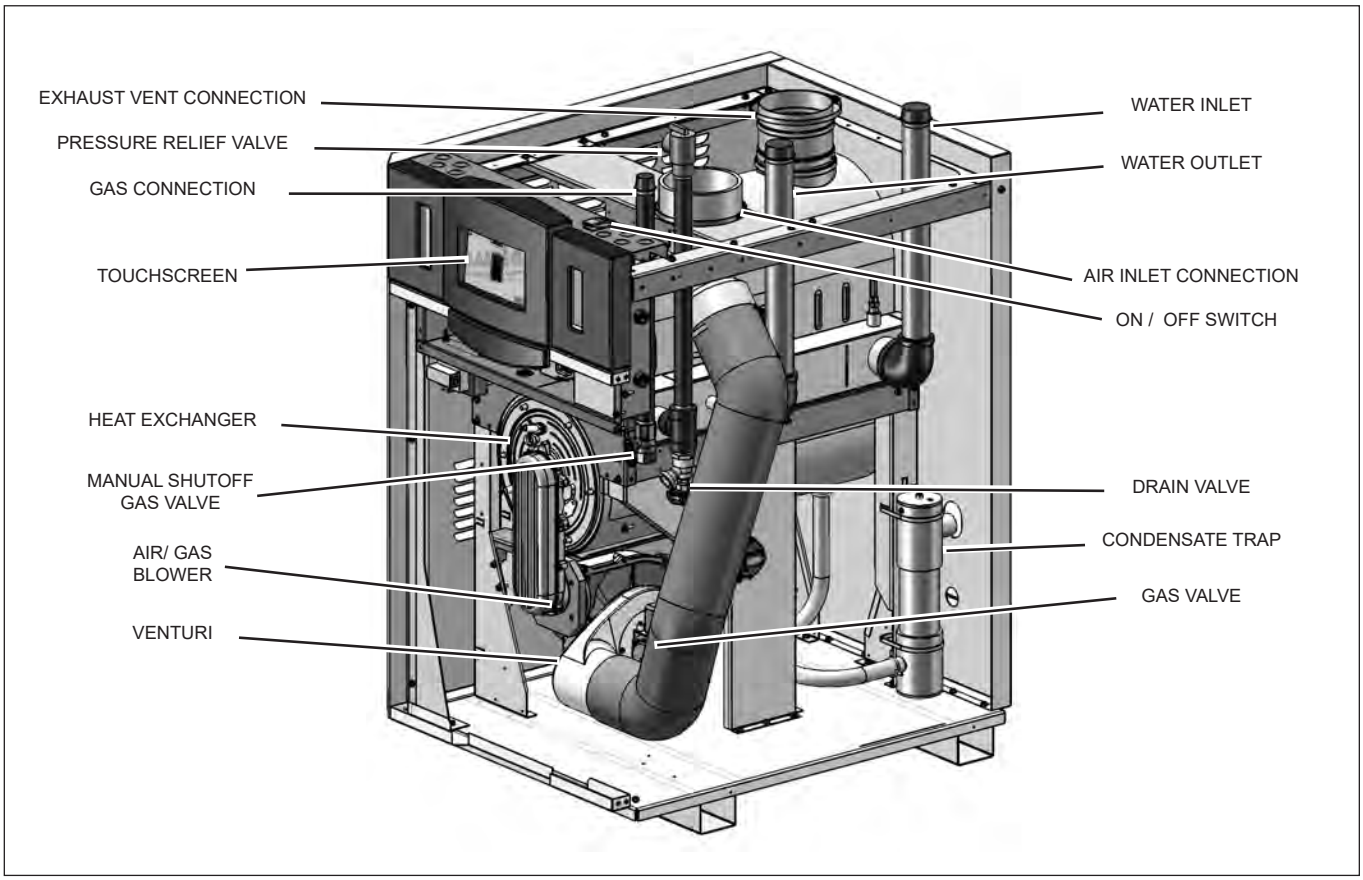

Figure 4. Location of Components, Indoor Size 399

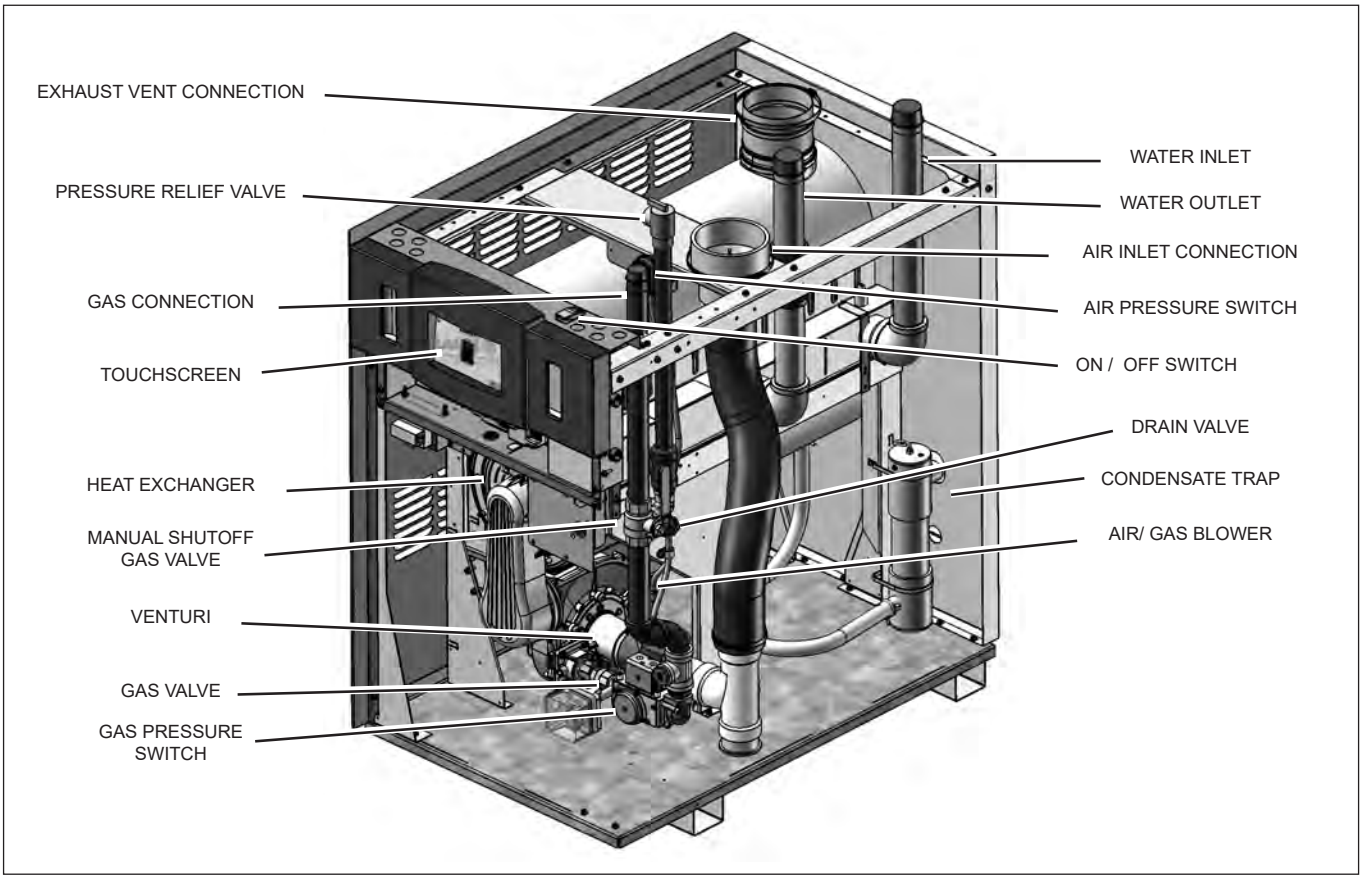

Figure 5. Location of Components, Indoor Size 500

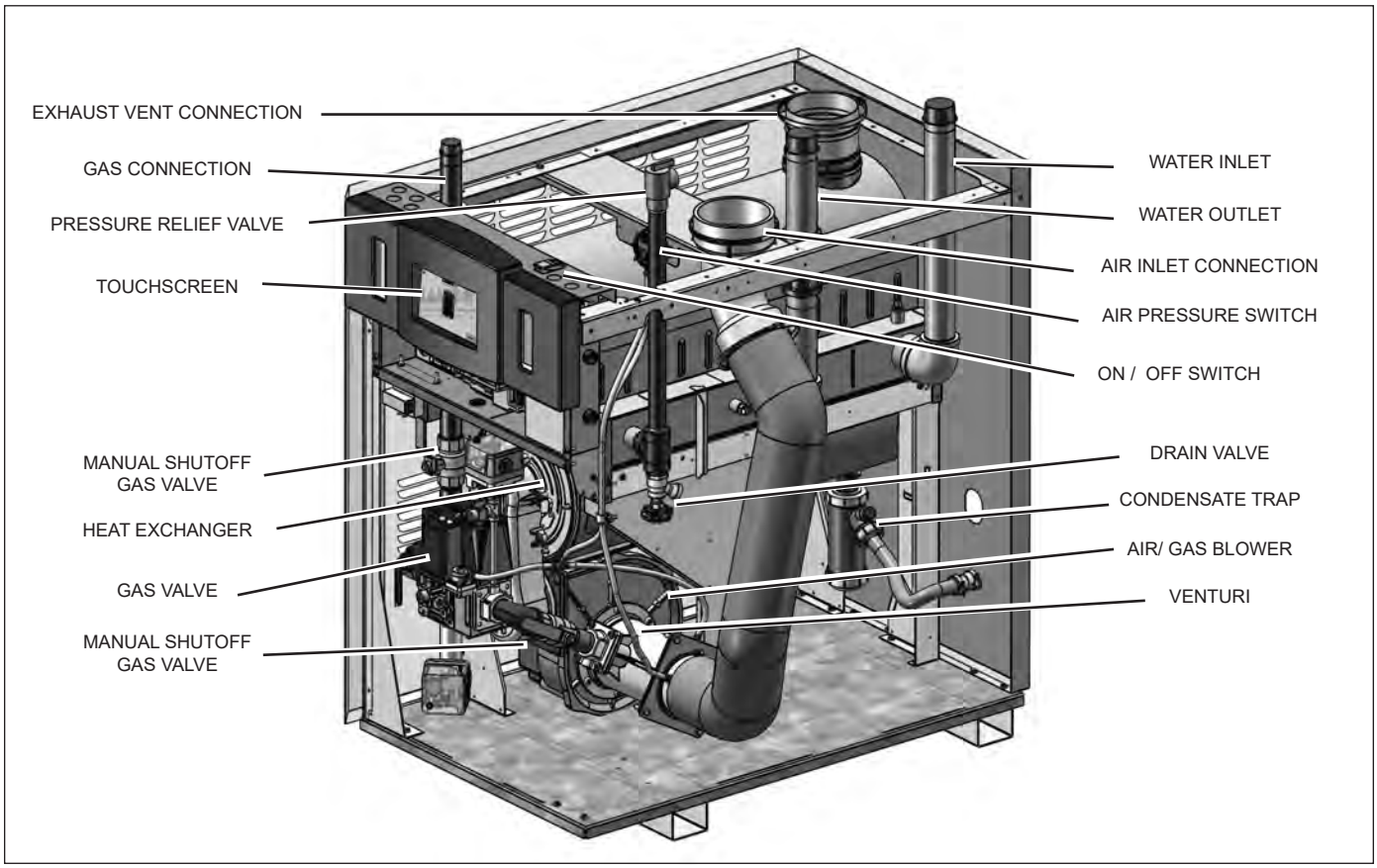

Figure 6. Location of Components, Size 600

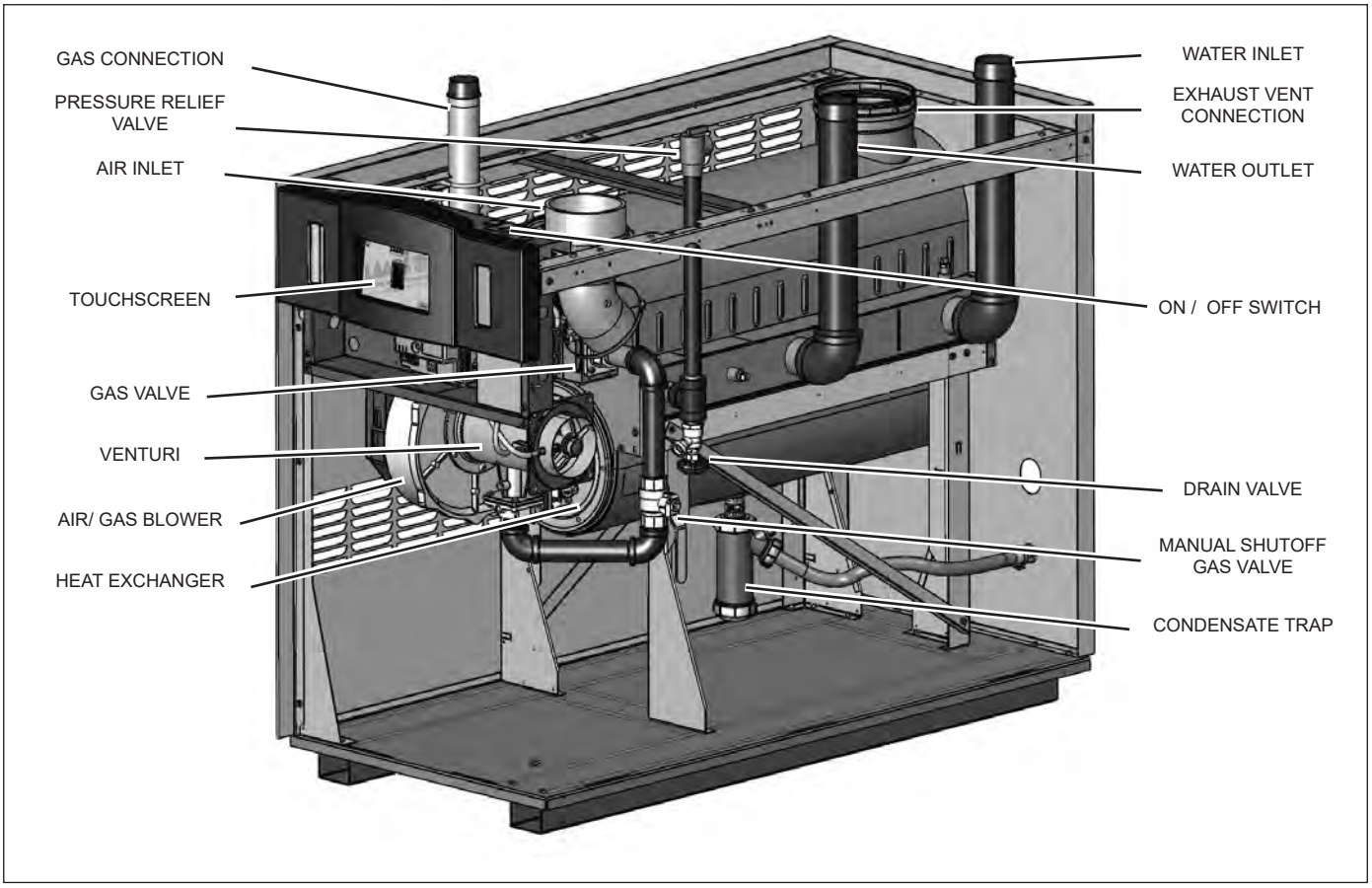

Figure 7. Location of Components, Sizes 750 and 850

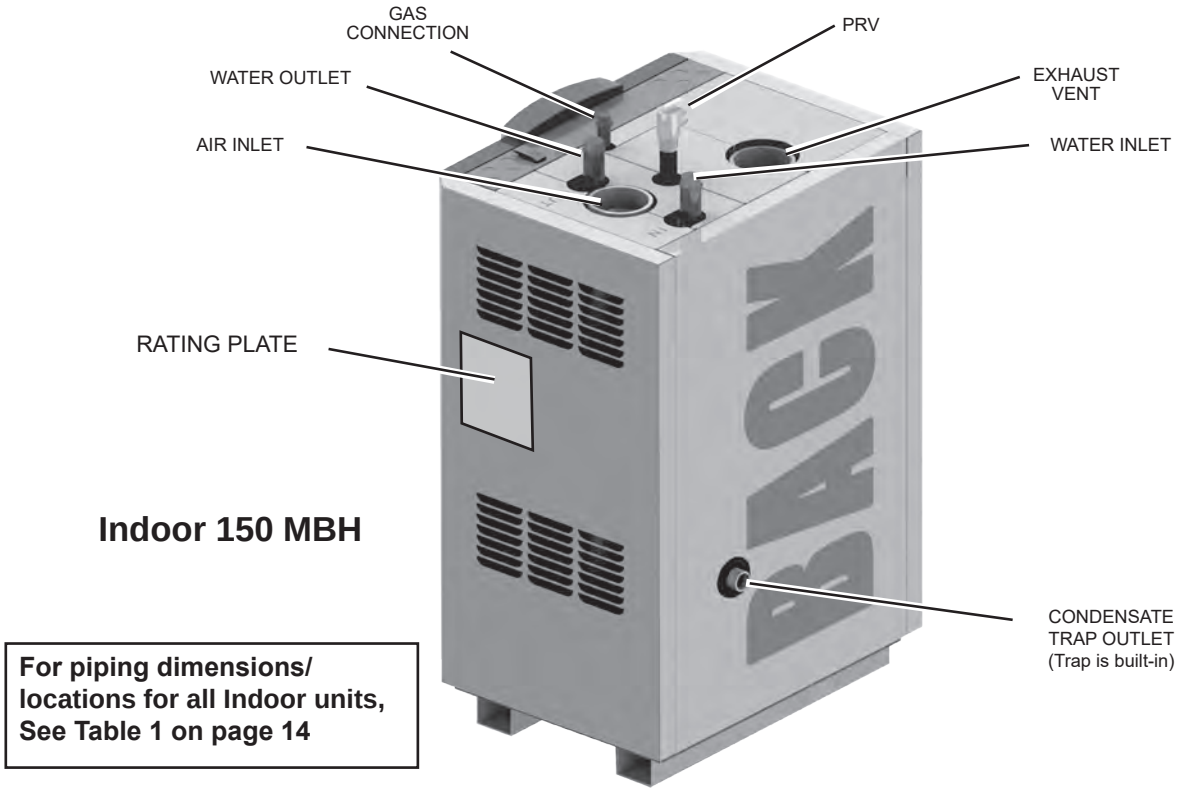

Indoor 150 MBH

For piping dimensions/ locations for all Indoor units, See Table 1 on page 14

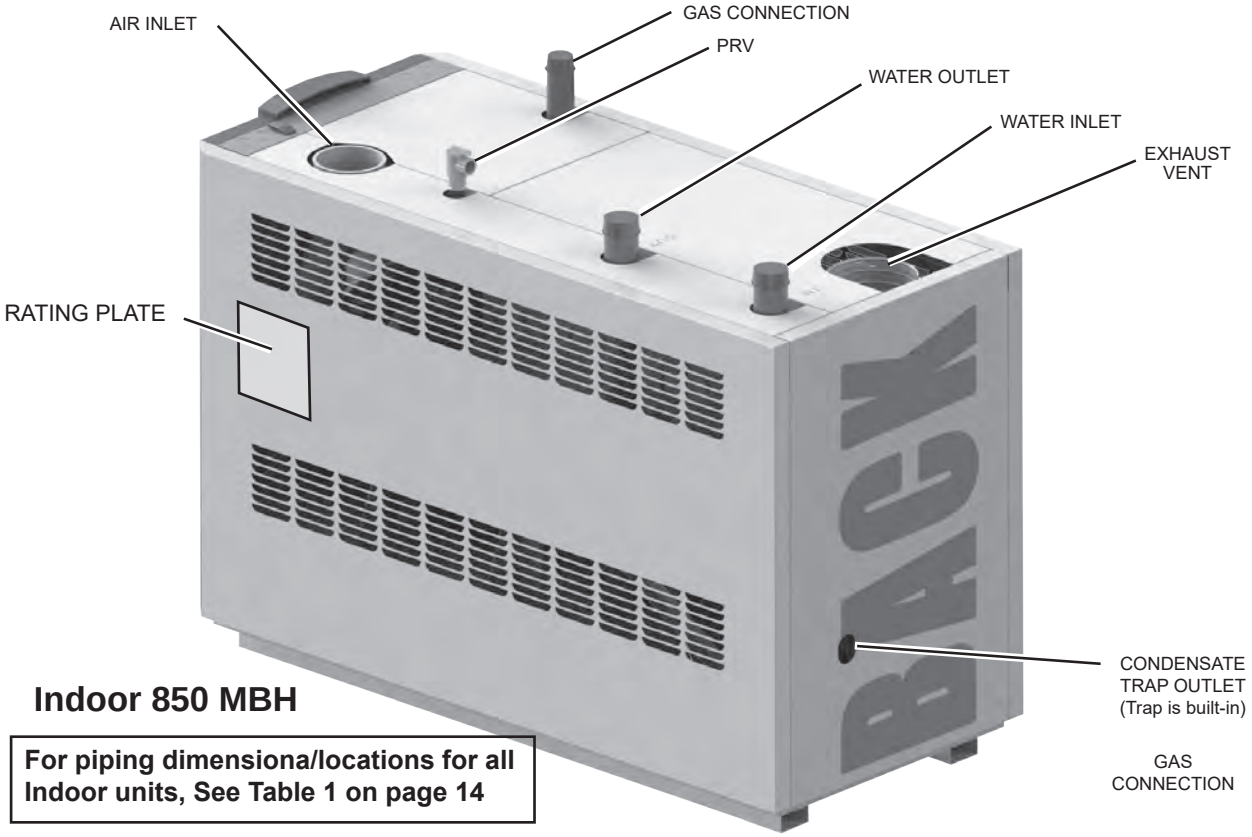

Indoor 850 MBH

For piping dimensiona/locations for all Indoor units, See Table 1 on page 14

Figure 8. Connection piping is on the BACK for ALL Outdoor Sizes

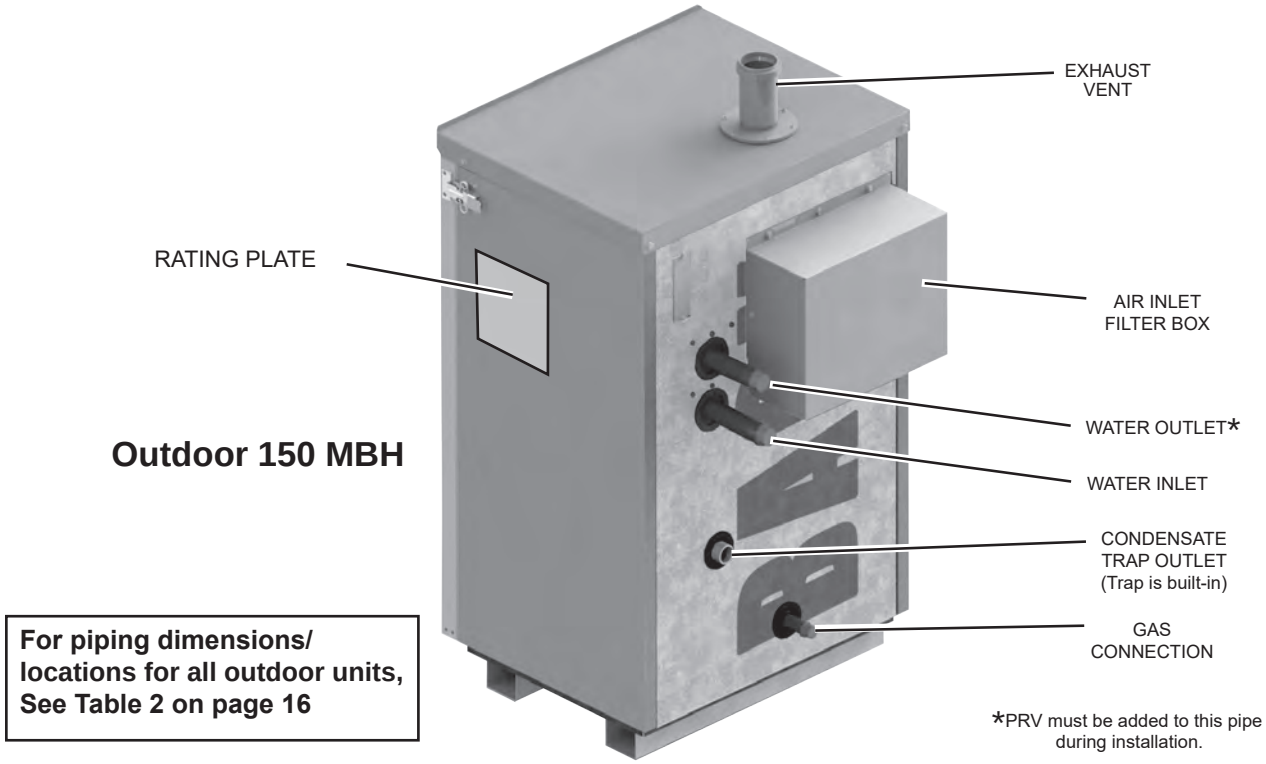

Outdoor 150 MBH

For piping dimensions/ locations for all outdoor units, See Table 2 on page 16

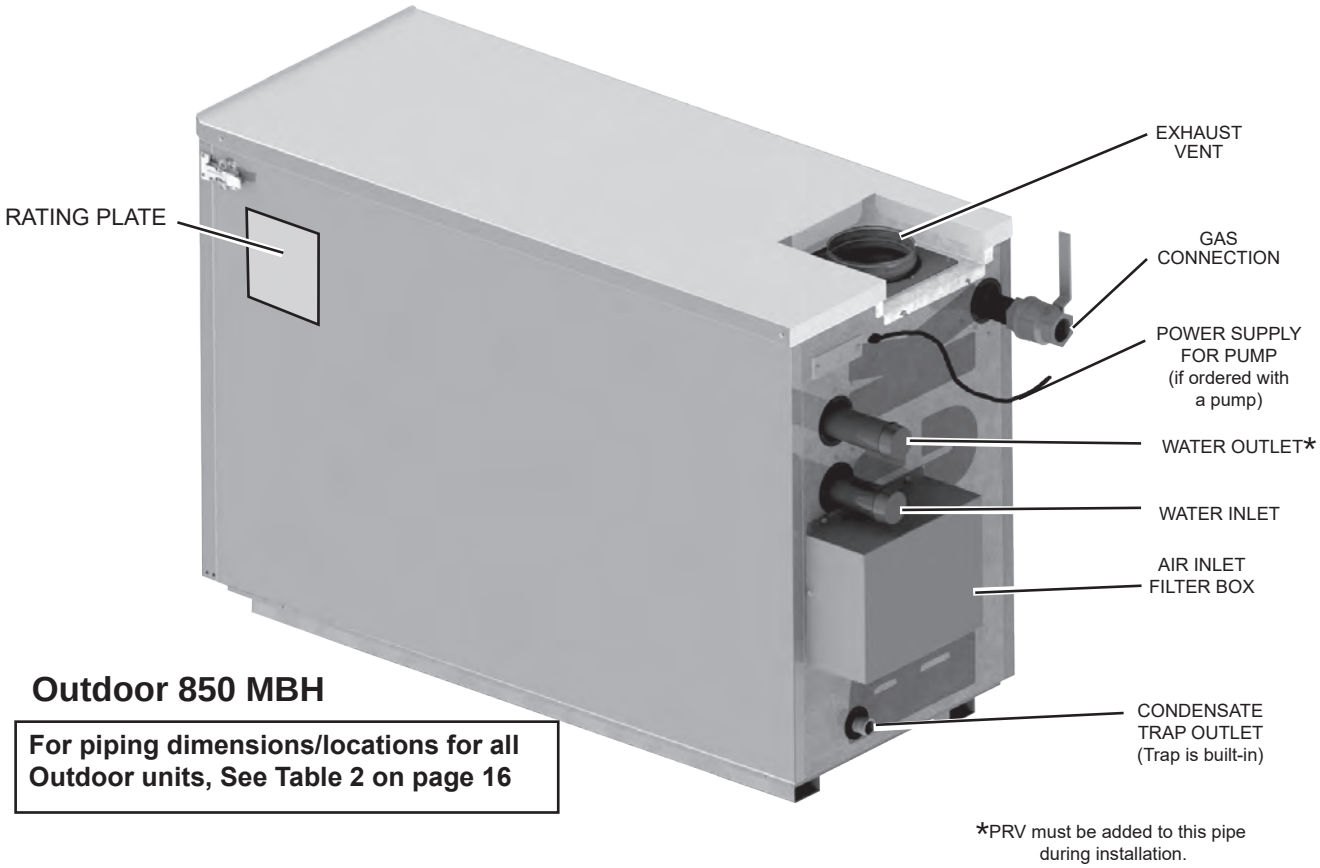

Outdoor 850 MBH

For piping dimensions/locations for all Outdoor units, See Table 2 on page 16

Figure 9. Connection piping is on the BACK for ALL Outdoor Sizes

1.F Dimensions, Indoor Models

	A		B		C		D		E		F		G		J		K		M		N	
Size	in	cm	in	cm	in	cm	in	cm	in	cm	in	cm	in	cm	in	cm	in	cm	in	cm	in	cm
150	13¼	34	5¼	14	18¼	46	3¼	8	10¾	28	7½	19	14¼	36	19½	49	7½	19	15¼	39	13	33
199	20½	52	5¼	14	18¼	46	3¼	8	17¾	45	7½	19	14¼	36	19½	49	11¾	30	15¼	39	13	33
285	20¼	52	7¼	19	19½	50	6¼	16	11¼	29	13½	34	14	36	15	38	17	43	18¾	48	13	33
399	25	64	5¼	13	19½	50	4¼	11	14¾	37	18½	47	19¼	49	16½	42	21¾	55	18¾	48	13	33
500	30¼	77	5¼	13	19½	50	4¼	11	15¼	38	20	51	20½	52	19	48	26	66	18¾	48	13	33
600	29¾	76	5	13	19½	50	4¼	11	15	38	20	51	3	8	19	48	26	66	18¾	48	8¼	21
750	35½	90	6	15	19½	50	5¼	13	19	48	40½	103	3¼	8	19	48	30¾	78	18¾	48	8¼	21
850	39¾	101	6	15	19½	50	5¼	13	19	48	44¾	114	3½	9	19	48	35	89	18¾	48	8¼	21

Table 1. Dimension Drawing, Indoor Sizes 150-850

Dimensions are nominal and are shown in inches, *cm*.

*Unit is shipped with adapters for the air and vent that accept standard pipe of the proper size and type.

	L (length)		AIR INLET		VENT	
SIZE	in	cm	in	cm	in	cm
150	19½	49	3	7.6	3	7.6
199	26¾	68	3	7.6	3	7.6
285	26¾	68	4	11	4	11
399	31½	80	4	11	4	11
500	37¾	96	4	11	4	11
600	37¾	96	4	11	4	11
750	51	130	4	11	6	17
850	55¼	140	4	11	6	17

Table 1. (dimensions continued)

For Water Connection Pipe Sizes, See “Table 15. Water Connection Pipe Sizes” on page 34

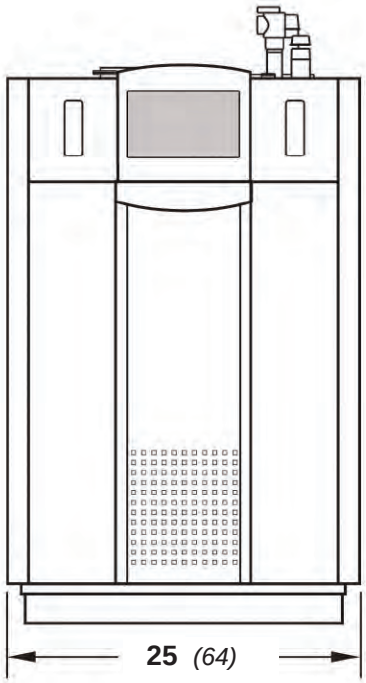

FRONT VIEW

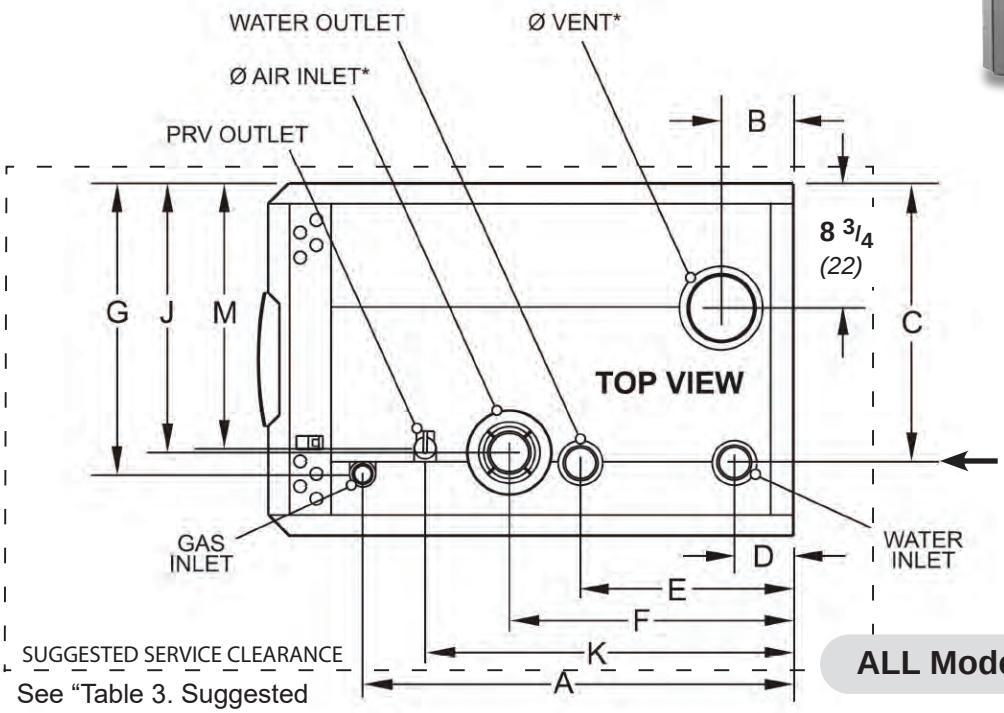

All Indoor Units have a very similiar component design with piping dimensions/locations that increase as the unit size increases.

Water and gas piping is always on the left side of the unit. Table 1 gives the exact dimensions for all of the different model sizes.

ALL Models

See “Table 3. Suggested Service Clearances” on page 20

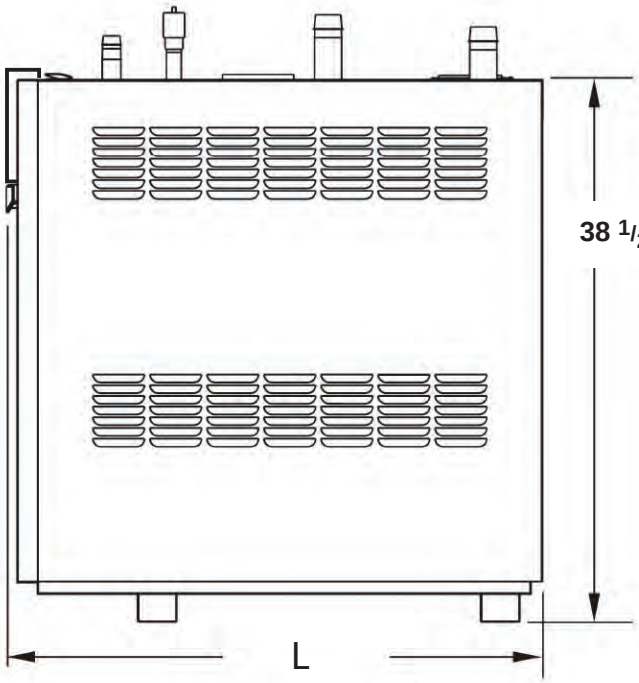

RIGHT SIDE VIEW

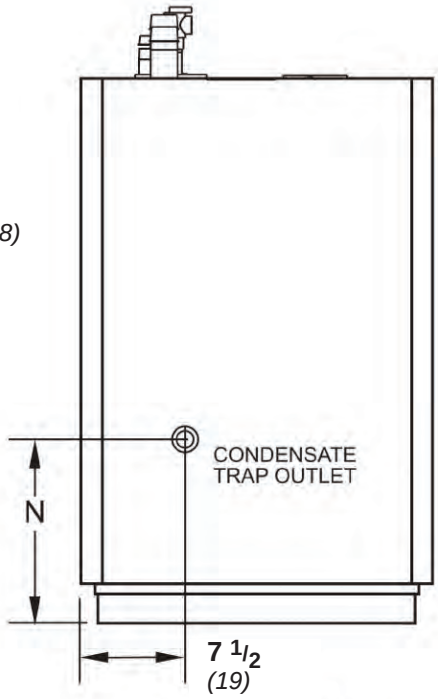

BACK VIEW

1.G Dimensions, Outdoor Models

SIZE	A		B		C		D		E		F		G		J	
	in	cm	in	cm	in	cm	in	cm	in	cm	in	cm	in	cm	in	cm
150	6-1/4"	16	11"	28	13"	33	17-1/4"	43.8	23-1/2"	60	18"	45.7	27"	69	23-1/2"	60
199	6-1/4"	16	11"	28	13"	33	17-1/4"	43.8	23-1/2"	60	18"	45.7	27"	69	24-1/2"	60
285	6"	15.5	11"	28	5"	13	17-1/4"	43.8	24"	61	19"	48	28-1/4"	72	12"	30.5
399	8"	15.5	19-1/2"	50	7-3/4"	20	17-1/4"	43.8	24"	61	19"	48	28-1/4"	72	12"	30.5
500	5"	13	17-3/4"	45	5"	13	8-1/4"	21	24"	61	19"	48	29-1/4"	74	12"	30.5
600	33-1/2"	85	3.0"	8	5"	13	8-1/4"	21	24"	61	19"	48	29-1/4"	74	12"	30.5
750	32-3/4"	83.2	3.0"	8	5-1/4"	13.4	17-1/4"	43.8	24"	61	19"	48	29-1/4"	74	12"	30.5
850	32-3/4"	83.2	3.0"	8	5-1/4"	13.4	17-1/4"	43.8	24"	61	19"	48	29-1/4"	74	12"	30.5

Table 2. Dimension Drawing, OUTDOOR Sizes 150-850

For Water Connection Pipe Sizes, See “Table 15. Water Connection Pipe Sizes” on page 34

Dimensions are nominal and are shown in inches, *cm*.

*Unit is shipped with adapters for the air and vent that accept standard pipe of the proper size and type.

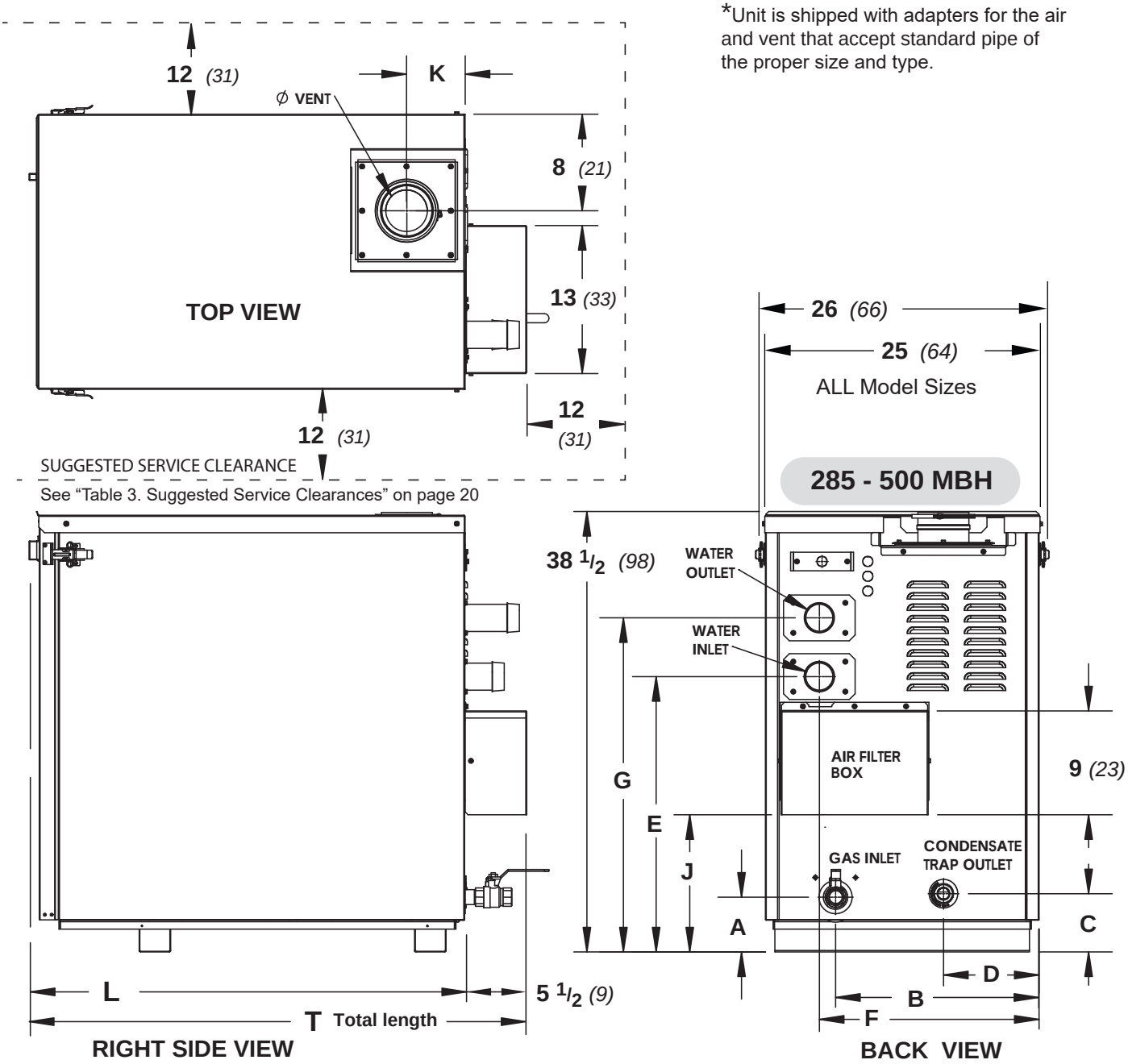

SIZE	K		L (Length)		T (Total Length)		VENT Ø	
	in	cm	in	cm	in	cm	in	cm
150	**5-1/4"**	*13*	**20"**	*60*	**25-1/2"**	*65*	**3**	*7.6*
199	**5-1/4"**	*13*	**27"**	*68.6*	**32-1/2"**	*82.5*	**3**	*7.6*
285	**7-1/4"**	*18.4*	**27"**	*68.6*	**32-1/2"**	*82.5*	**4**	*11*
399	**6"**	*15.2*	**31-1/4""**	*80.5*	**37-3/4"**	*96*	**4**	*11*
500	**5.5"**	*14*	**38"**	*96.5*	**43-1/2"**	*110.5*	**4**	*11*
600	**5-3/4"**	*14.6*	**38"**	*96.5*	**43-1/2"**	*110.5*	**4**	*11*
750	**5-3/4"**	*14.6*	**51-1/4"**	*130*	**57-3/4"**	*146.7*	**6**	*17*
850	**5-3/4"**	*14.6*	**55-3/4"**	*141.5*	**61-1/4"**	*155.5*	**6**	*17*

Table 2. (dimensions ontinued)

BACK VIEWS of the Outdoor Models

The Outdoor versions have a greater component location variance than the Indoor models. 4 Back Views are given to show the piping dimensions/locations for all of the different piping layouts. Table 2 gives the exact dimensions for all of the different model sizes.

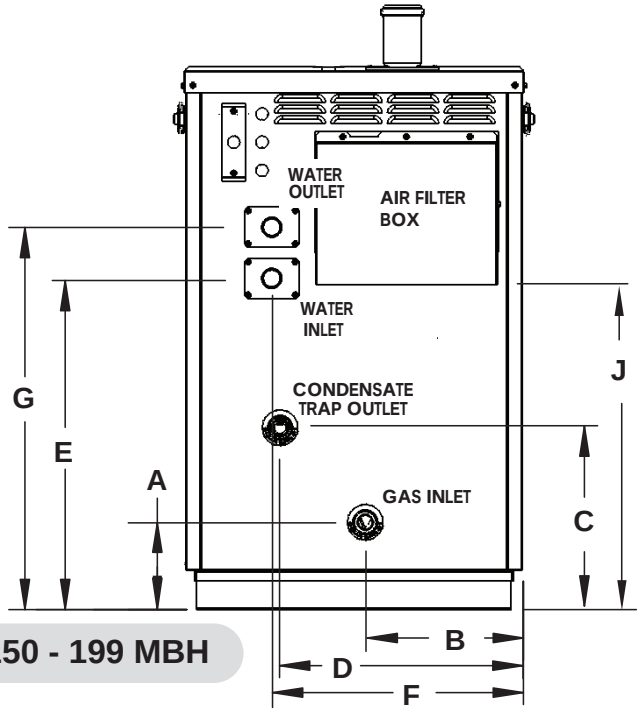

150 - 199 MBH

600 MBH

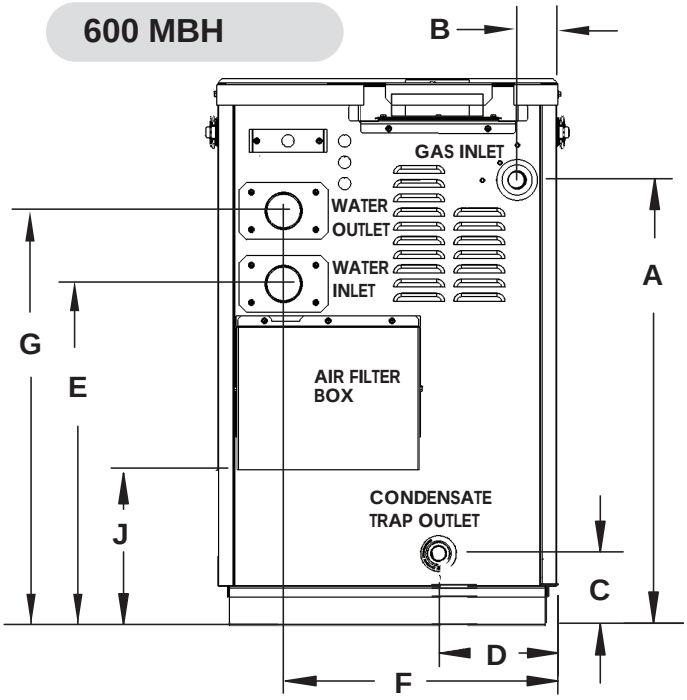

750 - 850 MBH

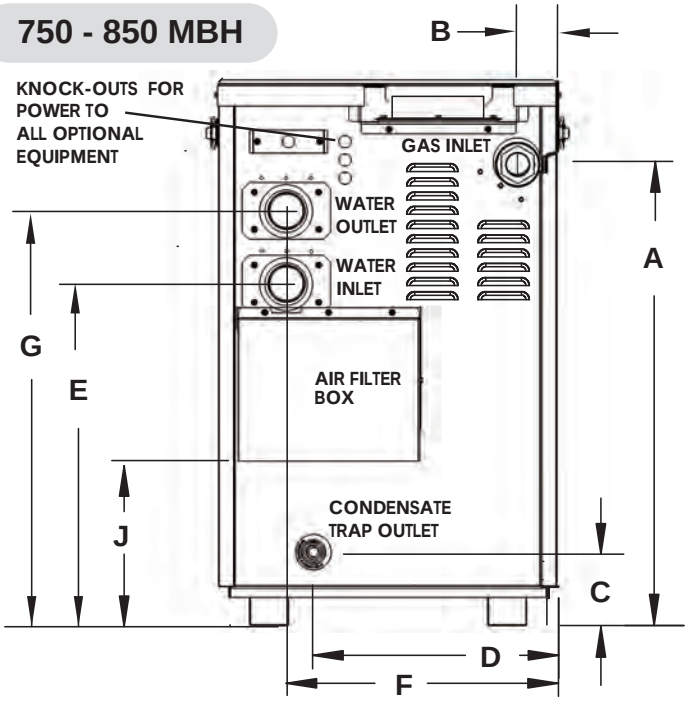

1.H The Installation Kit (installation parts box).

The Indoor models are shipped in a single crate with the Installation Kit (cardboard box). Check the contents of the Installation Kit with the items listed in Figure 10 and Figure 11. Additional parts may be packed inside the unit.

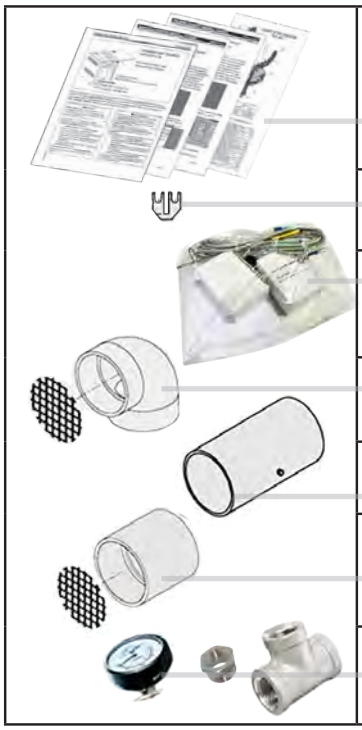

Document Bag
(all documents in one bag)

Terminal Block Jumper
(the Terminal Block Jumper is in the document bag)

Sensor Kits (Tank, Outdoor and System Sensors, all in the same bag (2 boxes, a sensor, and a wire).
Volume Water Heaters will not have an Outdoor Sensor

Air Intake Terminal Assembly
(elbow and a screen)

Vent Pipe

Exhaust Terminal Assembly
(end pipe and a screen),

Temp/Pressure Gauge Kit
(a bushing, an NPT Tee, and the gauge in a small box)

Figure 10. Standard Installation Components

Some accessory items may be shipped in separate packages. Verify receipt of all packages listed on the packing slip. Inspect everything for damage immediately upon delivery, and advise the carrier of any shortages or damage. Any such claims should be filed with the carrier. The carrier, not the shipper, is responsible for shortages and damage to the shipment whether visible or concealed.

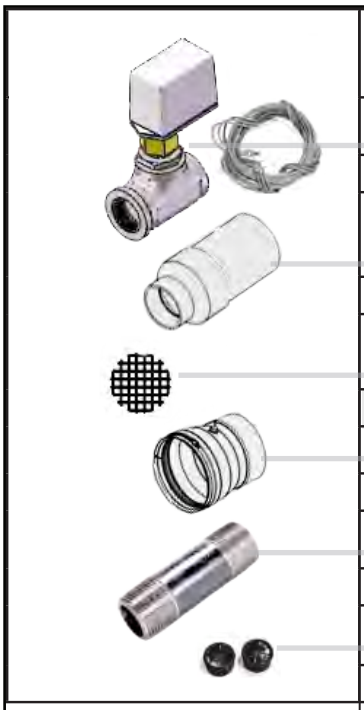

	80/105	150/199	285	399	500	600	750/850
Flow Switch Kit (flow switch, 2 wires, and an NPT tee)							
				1	1	1	1
Exhaust Adapter Assembly							
						1	1
Grid Screen, Venting							
	2		2				2
Vent Adapter, 6” PVC to 6” Stainless Steel							
							1
NPT Pipe (for flow switch)							
				1	1	1	1
Grommets for flow switch wires							
				2	2	2	2

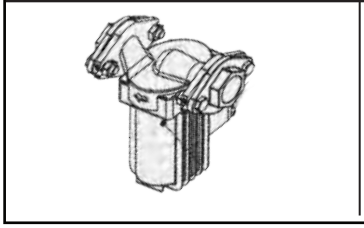

Optional Indoor Pump Kit

Figure 11. Additional Components, depending on model size and configuration.

The OUTDOOR Model Installation Kits, in addition to what is shown in Figure 10 and Figure 11, will include:

NOTE: Outdoor Installation of this volume water heater is not permitted in Canada.

Vent Pipe Extender,
Pipe Adapter,
Bird Screen,
PRV,
NPT Pipe Tee

Figure 12. Additional components for outdoor models.

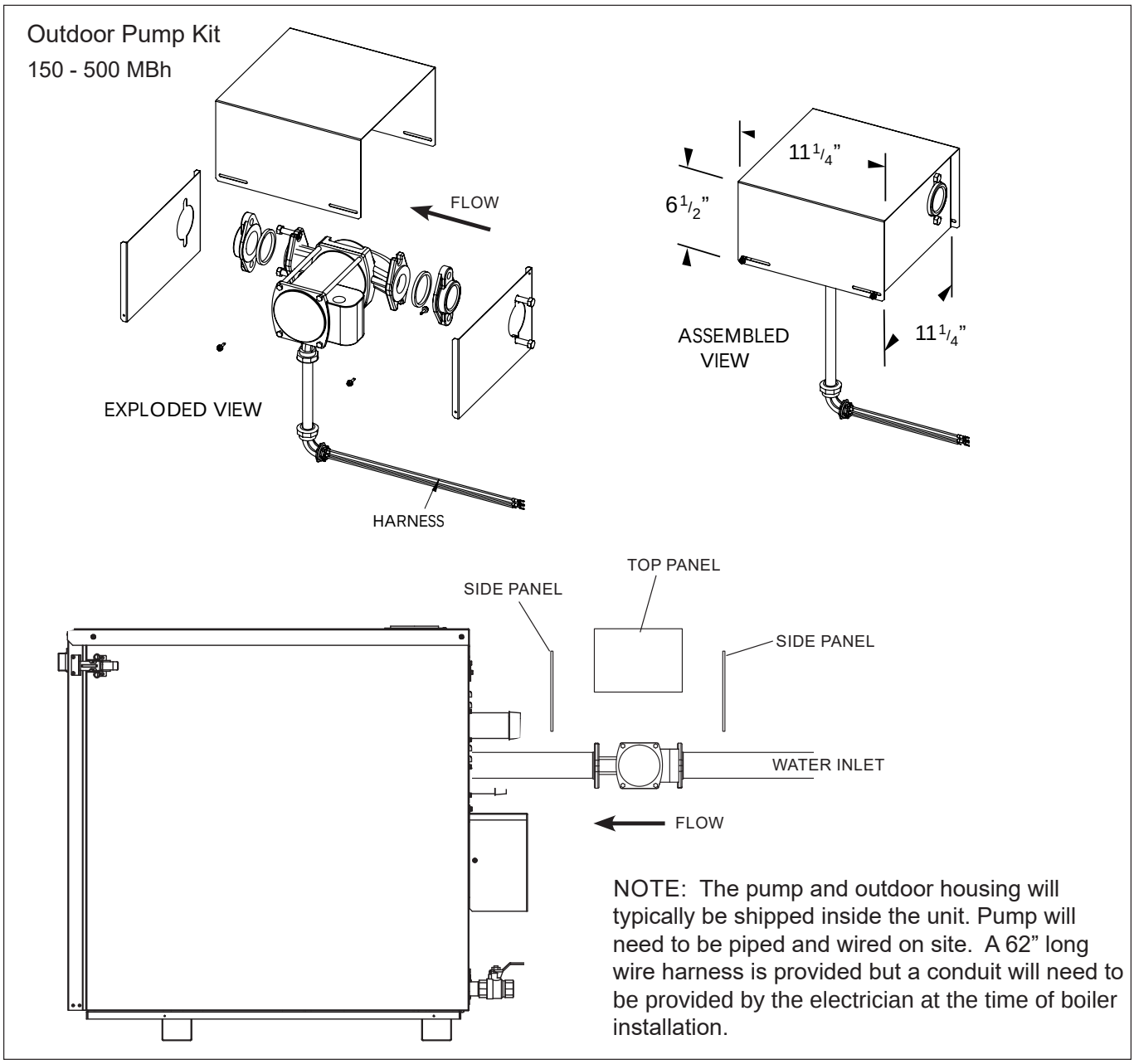

Figure 13. Outdoor Pump Kit

SECTION 2
LOCATING THE UNIT

2.A General Information

The 'Indoor' unit is designed and CSA-certified for indoor installations only.

The 'Outdoor' unit is designed and CSA-certified for outdoor installations only. Outdoor installation of this unit is not permitted in Canada.

If installing in a location that may experience freezing temperatures, precautions must be taken to prevent water in the heat exchanger and condensate inside and outside of the boiler from freezing. Damage due to freezing water or condensate is not covered by the warranty.
The appliance should be located to provide clearances on all sides for maintenance and inspection. It should not be located in an area where leakage of any connections will result in damage to the area adjacent to the appliance or to lower floors of the structure. When such a location is not available, it is recommended that a suitable drain pan, adequately drained, be installed under the appliance.

Always install the unit on a firm, level surface.
The unit is design certified by CSA-International for installation on combustible flooring; in basements; in closets, utility rooms or alcoves. These units must never be installed on carpeting. The location for the unit should be chosen with regard to the vent pipe lengths and external plumbing and on a level surface.

The Indoor units shall be installed such that the gas ignition system components are protected from water (dripping, spraying, rain, etc.) during operation and service (circulator replacement, control replacement, etc.). When vented vertically, the unit must be located as close as practical to the vertical section of the vent. If the vent terminal and/or combustion air terminal terminate through a wall, and there is potential for snow accumulation in the local area, both terminals should be installed at an appropriate level above grade or the maximum expected snow line.

The Outdoor units must be installed at least 10 ft (the vent pipe) from any door or window. The exhaust vent shall not be under any overhang or roof. Use only the vent components included with the boiler.

The dimensions and requirements that are shown in Table 3 should be met when choosing the locations for the appliance.

2.B Locating Appliance for Correct Vent Distance from Outside Wall or Roof Termination

The forced draft combustion air blower in the appliance has sufficient power to vent properly when the guidelines in Table 4 are followed.

For concentric vent terminal kit (optional), follow installation instructions included with the kit.

UNIT SURFACE	INDOOR INCHES	INDOOR *CM*	OUTDOOR INCHES	OUTDOOR *CM*
Left Side	**1**	*2.5*	**12**	*31*
Right Side	**12**	*31*	**12**	*31*
Top (for flue)	**24**	*61*	**48**	*122*
Back	**6**	*15*	**12***	*31**
Closet, Front	**1**	*2.5*	**1**	*2.5*
Front	**24**	*61*	**24**	*61*
Vent	Per Vent Manufacturer			

Certified by CSA for zero clearance to combustible materials on all sides.

*from filter box face. See "Table 2. Dimension Drawing, OUTDOOR Sizes 150-850" on page 16

Table 3. Suggested Service Clearances

INTAKE / EXHAUST										
STANDARD		MIN EQUIV. INTAKE		MIN EQUIV. VENT		MAX EQUIV.		OPTIONAL	MAX EQUIV.	
SIZE	VENT	**FT.**	*M*	**FT.**	*M*	**FT.**	*M*	VENT	**FT.**	*M*
150	3” *	**0**	*0*	**3**	*1*	**100**	*30.5*	n/a	—	—
199	3” *	**0**	*0*	**3**	*1*	**100**	*30.5*	n/a	—	—
285	4” *	**0**	*0*	**3**	*1*	**100**	*30.5*	n/a	—	—
399	4” *	**0**	*0*	**3**	*1*	**100**	*30.5*	n/a	—	—
500	4” *	**0**	*0*	**3**	*1*	**100**	*30.5*	n/a	—	—
600**	4” *	**0**	*0*	**3**	*1*	**40**	*6.1*	6”	**100**	*30.5*
750	4” *	**0**	*0*	**3**	*1*	**40**	*6.1*	6”	**100**	*30.5*
850	4” *	**0**	*0*	**3**	*1*	**40**	*6.1*	6”	**100**	*30.5*

*Appliance needs to vent outdoors using approved vent caps and following all guidelines as noted in our I/O manual. Proper protection against debris in the air intake (through using a downward spout and/or screen) to avoid debris pick-up / falling into the appliance is required.

**For any combination of vent and intake lengths up to 40 equivalent feet, any even or uneven combination of length is allowed. For overall lengths greater than 40 equivalent feet, the exhaust may be up to 20 feet greater than the intake length.

Combustion Intake and Vent must be the same size.

Minimum Combustion Air Intake Pipe Length - 0'* (0M) / Minimum Vent Pipe Length - 3' (1M)

Installations in the U.S. require exhaust vent pipe that is a combination of PVC & CPVC complying with ANSI/ASTM D1785 F441 or stainless steel complying with the stainless steel vent suppliers listed in Section 3. Installations in Canada require exhaust vent pipe that is certified to ULC S636.

Intake (air) pipe must be PVC or CPVC that complies with ANSI/ASTM D1785 F441, ABS that complies with ANSI/ASTM D1527 or galvanized material.

The installer must comply fully with the manufacturers installation instructions, including use of minimum exhaust length CPVC, to maintain ANSI Z21.13 safety certification.

Closet and alcove installations do not allow the use of PVC under any circumstances

This appliance needs to vent outdoors using approved vent caps and following all guidelines as noted in our IO manual. Proper protection against debris in the air intake (through using a downward spout and/or screen) to avoid debris pick-up / falling into the appliance is required.

To calculate max equivalent length, measure the linear feet of the pipe, and add 5 feet *(1.5m)* for each 90° elbow used. Add 2 ½ feet (.76 meters) for each 45 elbow used.

Table 4. Vent / Air Pipe Sizes and Length

SECTION 3
VENTING AND COMBUSTION AIR

3.A General Venting

This product requires a special venting system. Refer to venting supplier’s instructions for complete parts list and method of installation. The manufacturers and product lines listed on the following tables have been tested and authorized to safely operate with this unit. Suppliers of stainless steel and polypropylene venting that are not listed on these tables are not permitted for use with these category IV products.

Do not mix venting suppliers and models in venting systems. Failure to comply could result in personal injury, property damage, or death.

Installations must comply with applicable national, state and local codes.

3.B Combustion Air

These boilers and water heaters must have provisions for combustion and ventilation air in accordance with the applicable requirements for Combustion Air Supply and Ventilation in the National Fuel Gas Code, ANSI Z223 1; or in Canada, the Natural Gas and Propane Installation Code, CSA B149.1. All applicable provisions of local building codes must also be adhered to.

These units can take combustion air from the space in which it is installed, or the combustion air can be ducted directly to the unit. Ventilation air must be provided in either case.

NOTE: When located on the same wall, the combustion air intake terminal must be installed a minimum of 12” below the exhaust terminal. Models 399-850 also require a minimum horizontal distance from intake to exhaust terminal of 36”.

Combustion Air From Room In the United States, the most common requirements specify that the space shall communicate with the outdoors in accordance with method 1 or 2, which follow. Where ducts are used, they shall be of the same cross-sectional area as the free area of the openings to which they connect.

Method 1: Two permanent openings, one commencing within 12” (300mm) of the top and one commencing within 12” (300mm) of the bottom, of the enclosure shall be provided. The openings shall communicate directly, or by ducts, with the outdoors or spaces that freely communicate with the outdoors. When directly communicating with the outdoors, or when communicating to the outdoors through vertical ducts, each opening shall have a minimum free area of 1 square inch per 4000 Btu/hr (550 square mm/kW) of total input rating of all equipment in the enclosure. When communicating to the outdoors through horizontal ducts, each opening shall have a minimum free area of not less than 1 square inch per 2000 Btu/hr (1100 square mm/kW) of total input rating of all equipment in the enclosure.

Method 2: One permanent opening, commencing within 12” (300mm) of the top of the enclosure, shall be permitted. The opening shall directly communicate with the outdoors or shall communicate through a vertical or horizontal duct to the outdoors or spaces that directly communicate with the outdoors and shall have a minimum free area of 1 square inch per 3000 Btu/hr (734 square mm/kW) of the total input rating of all equipment located in the enclosure. This opening must not be less than the sum of the areas of all vent connectors in the confined space.

Other methods of introducing combustion and ventilation

MFR MODEL NUMBER (ABBREVIATED)

Example Components	Selkirk	DuraVent	NovaFlex
	Trade Name / Model		
	Safe-T Vent EZ Seal	**FasNSeal**	**Z Flex**
90° Elbow	9x14	FSELB90xx	2SVEExx90
Pipe	9x07	FSVLxxxx	2SVEPxxxx
Boiler Adapter	5x01BOI	FSAAUx	2SVSAxx (OD) 2SVSTTAxx (ID)
Horizontal Termination (bird screen)	9x92	FSBSx	2SVSTPXxx
Vertical Termination (rain cap)	5X00CI	FSRCx	2SVSRCxx
Inlet Air Termination	9xTERM	FSAIHXX*	2SVSTEXxx90
Adapter, SS to CPVC		FSA-xxFNSM-xPVCF	
Manufacturer Approved Hanger Straps	Distance between Hanger Straps **(Horizontal Run) - 6' MAX.** Distance between Hanger Straps **(Vertical Run) - 30' MAX.**	Distance between Hanger Straps **(Horizontal Run) - 6' MAX.** Distance between Hanger Straps **(Vertical Run) - 12' MAX.**	Distance between Hanger Straps **(Horizontal Run) - 4' MAX.** Distance between Hanger Straps **(Vertical Run) - 16' MAX.**
Adapter SS to PP		FSAAUx-xPP	2ZDCPVCx**
		*4", 6" & 7" only	**up to 6"

Table 5. Allowable Single Wall Stainless Steel Vent Suppliers and Part Numbers

ALLOWABLE POLYPROPYLENE VENT MANUFACTURERS / TRADE NAMES

MFR MODEL NUMBER (ABBREVIATED)

Example Components	CentroTherm	DuraVent	Selkirk	NovaFlex
	Trade Name / Model			
	InnoFlue	**PolyPro**	**PolyFlue**	**Z-Dens**
Single Wall Pipe	ISVLxxxx	xPPS-x	83x002	ZDPx
Elbow	ISELxxxx	xPPS-E90L	83x08	2ZDEx87
PVC Adapter	ISAGLxxxx	xPPS-ADL (to 4") xPPS-xxPVCM-xPPF (>4")	83x040	2ZDCPVCx
Horizontal Termination (bird screen)	IASPPxx (2" - 4") IASSSxx (5" - 12")	xPPS-BG (2" - 6")	83x050	2ZDESx
Vertical Termination	IASPPxx (2" - 4") IASSSxx (5" - 12")	xPPS-VKL (<5") xPPS-VTML (5"-8")	83x050	2ZDESx
Air Inlet				2ZDESx
Manufacturer Approved Hanger Straps	Distance between Hanger Straps **(Horizontal Run) - 3' MAX.** Distance between Hanger Straps **(Vertical Run) - 6' MAX.**	Distance between Hanger Straps **(Horizontal Run) - 5' MAX.** Distance between Hanger Straps **(Vertical Run) - 10' MAX.**	Distance between Hanger Straps **(Horizontal Run) - 2.5' MAX.** Distance between Hanger Straps **(Vertical Run) - 16' MAX.**	Distance between Hanger Straps **(Horizontal Run) - 3' MAX.** Distance between Hanger Straps **(Vertical Run) - 6' MAX.**

NOTE: “x”, “xx”, and “xxxx” refer to variations in nominal size. See manufacturer’s catalog for a particular application.

Table 6. Allowable Polypropylene Vent Manufacturers / Trade Names

air are acceptable, providing they conform to the requirements in the applicable codes listed above.

In Canada, consult local building and safety codes or, in absence of such requirements, follow CAN/CSA B149.

Ducted Combustion Air

The combustion air can be taken through the wall, or through the roof. When taken from the wall, it must be taken from out-of-doors by means of a horizontal wall terminal, kit, See Table 7.

See Table 4 to select the appropriate diameter air pipe. When taken from the roof, a field-supplied rain cap or an elbow arrangement must be used to prevent entry of rain water. (See Figure 17)

Use ABS, PVC, CPVC or galvanized pipe for the combustion air intake. Route the intake to the boiler as directly as possible. Seal all joints. Provide adequate hangers. The unit must not support the weight of the combustion air intake pipe. Maximum linear pipe length allowed is shown in Table 4. Subtract 5 allowable linear ft. (1.5m) for every elbow used.

The connection for the intake air pipe is at the top of the unit.

In addition to air needed for combustion, air shall also be supplied for ventilation, including air required for comfort and proper working conditions for personnel. Refer to the applicable codes.

	HORIZONTAL INTAKE AND EXHAUST PVC VENT TERMINAL KITS								
	2” PVC			3” PVC			4” PVC		6” PVC
Size	Standard	Concentric CA006000	Flush Mount CA010100	Standard CA005900	Concentric 239-44069-01	Flush Mount CA010101	Standard	Flush Mount CA010102	Standard
150	incl.	opt.	opt.	incl.	opt.	opt.			
199/210	incl.	opt.	opt.	incl.	opt.	opt.			
285				opt.	opt.	opt.	incl.	opt.	n/a
399				n/a	n/a	n/a	incl.	opt.	n/a
500				n/a	n/a	n/a	incl.	opt.	n/a
600				n/a	n/a	n/a	incl.	opt.	opt.
750				n/a	n/a	n/a	incl.	n/a	opt.
850				n/a	n/a	n/a	incl.	n/a	opt.

Concentric vent terminal = 10 ft. pipe length

Table 7. PVC Vent Terminal Kits

SIZE	PRO TECH (FasNSeal)			HEAT FAB (Saf-T-Vent)				Z FLEX (Z-Vent)		
	Boiler Adapter	Flue Termination	Intake Air Termination	Boiler Adapter	Intermediate Adapter	Flue Termination	Intake Air Termination	Boiler Adapter	Flue Termination	Intake Air Termination
399-600	F303759	FSBS4 FSRC4(R.C)	FSAIH04 303888	KB285600	9454BUREZ-1*	9492 5400CI	9414TERM	2SVSLA04	2SVSTP04 2SVSRCX04	2SVSTEX0490
750-850	F303759	FSBS6	FSAIH04 303888							

Figure 14. Approved Stainless Terminations and Adapters

	INSTALLATION STANDARDS	
MATERIAL	UNITED STATES	CANADA
ABS	ANSI/ASTM D1527	Air pipe material must be chosen based upon the intended application of the boiler.
PVC, sch 40	ANSI/ASTM D1785 or D2665	
CPVC, sch 40	ANSI/ASTM F441	
Single wall galv. steel	26 gauge	

Figure 15. Required Combustion Air Pipe Material

⚠ WARNING

When an existing Cat I appliance is removed or replaced, the original venting system may no longer be sized to properly vent the attached appliances. Under no circumstances should an improperly sized vent be used. An improperly sized vent may cause operational and safety problems, and could result in serious injury, death, or property damage.

3.C Venting

This unit is a Category IV appliance and may be installed with PVC and CPVC that complies with ANSI/ ASTM D1785 F441, polypropylene that complies with ULC-S636 Class IIb, or a stainless steel venting system that complies with UL 1738 Standard. (See Table 6)

The unit's vent can terminate through the roof, or through an outside wall.

When using PVC/CPVC for vent material, venting must be connected to the CPVC section included with sizes 80-850. The CPVC vent section included with the unit may be broken by CPVC fittings if necessary, but never reduced in total length. See Table 4 to select the appropriate vent pipe diameter. When using polypropylene, all vent material must be produced by the same manufacturer, and have a ULC-S636 rating.

All installations should be done following the vent supplier's recommended installation techniques. If manufacturer's instructions are not available for the material used, follow the manufacturers recommendations.

Route vent pipe to the heater as directly as possible. Please see Table 4 on page 21 for proper diameter vs. length allowed.

REMARQUE : Acheminer le tube d'évent à l'appareil de chauffage le plus directement possible. Veuillez voir le tableau 4 à la page 13 pour le bon diamètre vs. longueur autorisée. Le tuyau d'évacuation doit pitch vers le haut, vers la borne d'évent, pas moins de 1/4 " par pied, de sorte que les condensats courir vers l' et appareil écouler thru le réservoir des condensats. Portions horizontales du système d'aération doit être soutenu pour empêcher l'affaissement et peut ne pas avoir de faibles sections qui pourraient piéger des condensats

IMPORTANT NOTE ABOUT COMMON VENTING: A single vent that is shared by multiple units MUST be engineered by a competent venting specialist, and involves the selection of draft inducing equipment, hardware and controls to properly balance flue gas pressures. **Do not common vent units unless the vent system meets this requirement. These units are never permitted to share a vent with Category I appliances.**

⚠ WARNING

Failure to use polypropylene CPVC or stainless steel venting for the first 20" (285-600) / 30" (199 / 210) of vent material or for any part of the venting that is installed inside a closet may lead to property damage, personal injury or death. The proper length of this material is supplied with boiler. Boilers in the U.S. may use pipe included with the boiler.

Failure to use the appropriate vent material, installation techniques, glues/sealants could lead to vent failure causing property damage, personal injury or death.

Use of cellular core PVC (ASTM F891), cellular core CPVC, or Radel® (polyphenolsulfone) used in non-metallic venting systems is prohibited.

Non-metallic vent pipe (PVC, CPVC, polypropylene or other) shall NOT be insulated or covered. Insulating or covering non-metallic venting may cause overheating which diminishes the integrity of the pipe.

All venting must be installed according to this manual and any other applicable local codes, including but not limited to, ANSI Z223.1/NFPA 54, CSA B149.1, CSAB149.2 and ULC-S636. Failure to follow this manual and applicable codes may lead to property damage, severe injury, or death.

⚠ WARNING

This product uses non-metallic insulation

NOTE: The flue temperature of the unit changes dramatically with changes in operating water temperature. Therefore, it is necessary to assess the application of the boiler to determine the required certified vent class. If the unit is installed in an application where the ambient temperature is elevated, and/or installed in a closet/alcove, polypropylene, CPVC or stainless steel material is required. If the system temperatures are unknown at the time of installation, Class IIB or higher venting material is recommended.

NOTE: The vent pipe must pitch upward, toward the vent terminal, not less than 1/4" per foot, so that condensate will run back to the unit and drain out thru the condensate trap. Horizontal portions of the venting system must be supported to prevent sagging and may not have any low sections that could trap condensate. Seal all joints and provide adequate hangers as required in the venting system manufacturer's Installation Instructions. The unit must not support the weight of the vent pipe.

	INSTALLATION STANDARDS	
MATERIAL	UNITED STATES	CANADA
Stainless Steel	UL 1738	Venting must be ULC-S636 certified for use as venting material. The venting material class must be chosen based upon the maximum flue gas temperature and the intended application of the boiler.
PVC, sch 40	ANSI/ASTM D1785	
CPVC, sch 40	ANSI/ASTM F441	
Polypropylene	ULC-S636	

Figure 16. Required Exhaust Vent Material

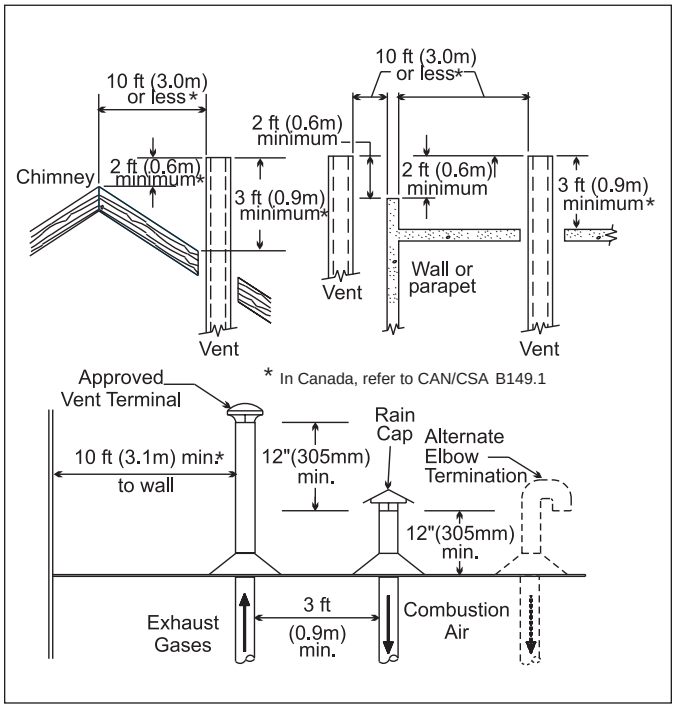

Figure 17. Combustion Air and Vent Through Roof

Venting Requirements Unique to Canada

These boilers and water heaters are Vent Category IV appliances. Per the requirements of CAN/CSA-B149.1, only BH vent systems can be connected to these units and such vent systems, either ULC S636 certified stainless steel or other ULC S636 certified BH vent (eg. plastics) must be installed per the vent manufacturer's certified installation instructions.

As a result, two items listed in the Installation Kit (Figure 10 and Figure 11) are **not included** with these units for Canada (underlined):

A **exhaust vent terminal** *(not included)*

B. air intake terminal

C. temperature/pressure gauge kit

D. circulator pump/wire harness (units with pump)

E. **CPVC exhaust pipe section (80-500)** *(not incl.)*

F. outdoor/system sensor kit

G. flow switch kit (399-850)

H. alternate size vent/terminal screens

J. exhaust vent adapter CPVC/ST ST (750-850)

It is the responsibility of the appropriately licensed technician installing this unit to use ULC S636 certified vent material consistent with the requirements as described in the Venting and Combustion Air section.

Class I venting systems are suitable for gas-fired appliances producing flue gas temperature of more than 135°C, but not more than 245°C.

Class II venting systems are suitable for gas-fired appliances producing flue gas temperatures of 135°C or less.

Class II venting systems are further classified into four temperature ratings as follows:

A Up to and including 65°C

B Up to and including 90°C

C Up to and including 110°C, and

D Up to and including 135°C

IMPORTANT! It is also the responsibility of the installer to ensure that a flue gas sampling port is installed in the vent system. This flue gas sampling port must be installed near the flue connection of the unit: within 2 feet of the flue connection. There is no flue gas sampling port internal to the unit, so one must be installed in the vent system external to the unit. A flue gas sampling port available as a component of the ULC S636 certified vent system is preferred. However, if one is not available with the certified vent system, the manufacturer suggests using a tee with the branch connection sized to allow for insertion of a flue gas analyzer probe. The branch connection must be resealable with a cap or other by other means to ensure the vent system remains sealed. (See Figure 18)

Consideration must be given to the placement and orientation of the flue gas sampling port to ensure that condensate is free to flow back into the unit and not collect anywhere in the vent system - including in the flue gas sampling port.

An exhaust vent terminal must be installed. If an exhaust vent terminal is not available with the certified vent system, the manufacturer suggests the use of a coupler fitting from the certified vent system into which the vent terminal screen, included with the unit and shown in the Unpacking section, be installed. Be sure to install and terminate both vent and combustion air pipes per the Venting and Combustion Air section of the unit's instructions.

3.D Common Venting

High efficiency boilers and water heaters up to 500 MBTU/H may be common vented using Non-Return Valve kits and Centrotherm InnoFlue polypropylene venting. Go online to the manufacturer's website and refer to the Common Venting Installation Instructions, document number 1427, for instructions on sizing and installing a common venting system.

If common venting is required on larger model sizes or with different venting materials, it MUST be engineered by a competent venting specialist, and involves the selection of draft inducing equipment, hardware and controls to properly balance flue gas pressures. Do not common vent these units unless the vent system meets this requirement. High efficiency class IV units are never permitted to share a vent with Category I appliances.

3.E Locating Vent and Combustion Air Terminals

Side Wall Vent Terminal

The appropriate side wall vent terminal must be used. The terminal must be located in accordance with ANSI Z223.1/NFPA 54 and applicable local codes. In Canada, the installation must be in accordance with CSA B149.1 or .2 and local applicable codes. Consider the points listed on the following page when installing the terminal.

1. Figure 20 shows the requirements for mechanical vent terminal clearances for the U.S. and Canada. The outdoor models must be installed at least 10 ft (the vent pipe) from any door or window that can be opened. The exhaust vent shall not be under any overhang or roof. Use only the vent components included with the boiler.
2. Vent terminals for condensing appliances or appliances with condensing vents are **not** permitted to terminate above a public walkway, or over an area where condensate or vapor could create a nuisance or hazard.
3. Locate the vent terminal so that vent gases cannot be drawn into air conditioning system inlets.
4. Locate the vent terminal so that vent gases cannot enter the building through doors, windows, gravity inlets or other openings. Whenever possible, avoid locations under windows or near doors.
5. **Locate the vent terminal so that it cannot be blocked by snow. The installer may determine that a vent terminal must be higher than the minimum shown in codes, depending upon local conditions.**
6. Locate the terminal so the vent exhaust does not settle on building surfaces or other nearby objects. Vent products may damage surfaces or objects.
7. If the boiler or water heater uses ducted combustion air from an intake terminal located on the same wall.

If the vent termination is located in an area exposed to high winds, an optional PVC tee (the same diameter as the vent pipe) may be used. The tee'd vent termination offers greater protection from wind related operating issues.

Side Wall Combustion Air Terminal

The side wall combustion air terminal, or concentric terminal must be used when the heater takes air from a side wall. (See page 23) Contact manufacturer for AL29-4C termination fittings. Consider the following when installing the terminal. (See Figure 20 through Figure 21.)

1. Do not locate the air inlet terminal near a source of corrosive chemical fumes (e.g., cleaning fluid, chlorine compounds, etc.)
2. Locate the terminal so that it will not be subject to damage by accident or vandalism. It must be at least 7 feet (2.1m) above a public walkway.
3. Locate the combustion air terminal so that it cannot be blocked by snow. The National Fuel Gas Code requires that it be at least 12 inches (30cm) above grade, but the installer may determine it should be higher, depending upon local conditions.

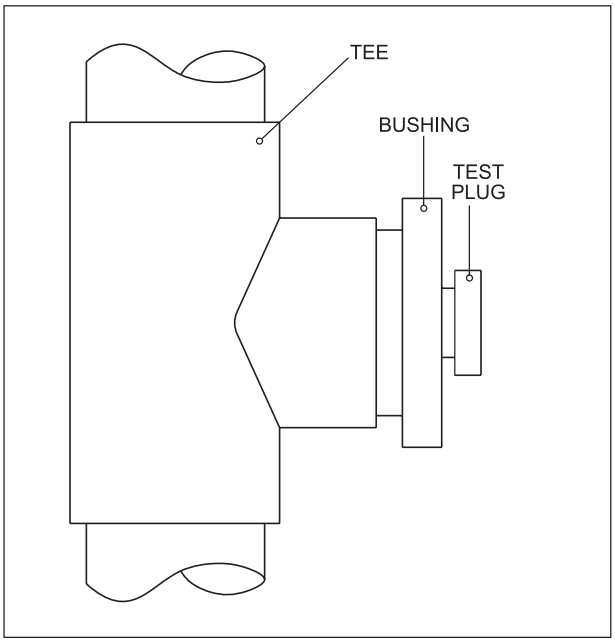

Figure 18. Test Port - ULC-S636 system

4. **For concentric vent, follow instructions included with vent kit.**
5. Multiple vent kits should be installed such that the horizontal distance between the outlet group and the inlet group is 36” (90cm). (Figure 19.)
6. The vent outlet for models 199-285 must be no lower than the center of the air inlet, and must be at least 12” (30cm) away from the air inlet. Vent outlets for models 399-850 must be at least 12” above the top of the air inlet, and must be at least 36” (90cm) horizontally from the air inlet. (page 27.)

Vertical Vent Terminal

When the unit is vented through the roof, the vent must extend at least 3 feet (0.9m) above the point at which it penetrates the roof. It must extend at least 2 feet (0.6m) higher than any portion of a building within a horizontal distance of 10 feet (3.0m), and high enough above the roof line to prevent blockage from snow. The vent terminal included with the unit can be used in both vertical and horizontal applications. When the combustion air is taken from the roof, the combustion air must terminate at least 12” (30cm) below the vent terminal. (See Figure 17.)

Vertical Combustion Air Terminal

When combustion air is taken from the roof, a field-supplied rain cap or an elbow arrangement must be used to prevent entry of rain water. (Figure 17.) The opening on the end of the terminal must be at least 12” (30cm) above the point at which it penetrates the roof, and high enough above the roof line to prevent blockage from snow. When the vent terminates on the roof, the combustion air must terminate at least 12” (30cm) below the vent terminal.

Installations in the Commonwealth of Massachusetts

In Massachusetts the following items are required if the side-wall exhaust vent termination is less than seven (7) feet above finished grade in the area of the venting, including but not limited to decks and porches. From Massachusetts Rules and regulations 248 CMR 5.08 (begininning on 2nd page following):

1. **Installation of Carbon Monoxide Detectors**

   At the time of installation of the side wall vented gas fueled appliance, the installing plumber or gas-fitter shall observe that a hard-wired carbon monoxide detector with an alarm battery back-up is installed on the floor level where the gas appliance is to be installed. In addition, the installing plumber or gasfitter shall observe that a battery operated or hard-wired carbon monoxide detector with an alarm is installed on each additional level of the dwelling, building or structure served by the side-wall horizontally vented gas fueled equipment. It shall be the responsibility of the property owner to secure the services of qualified licensed professionals for installation of hard-wired carbon monoxide detectors.

   a. In the event that the side-wall horizontally vented

NOTE:
For US installations, the vent for this appliance shall not terminate:
i) over public walkways; or
ii) near soffit vents or crawl space vents or other areas where condensate or vapor could create a nuisance or hazard or cause property damage; or
iii) where condensate vapor could cause damage or could be detrimental to the operation of regulators, relief valves, or other equipment.

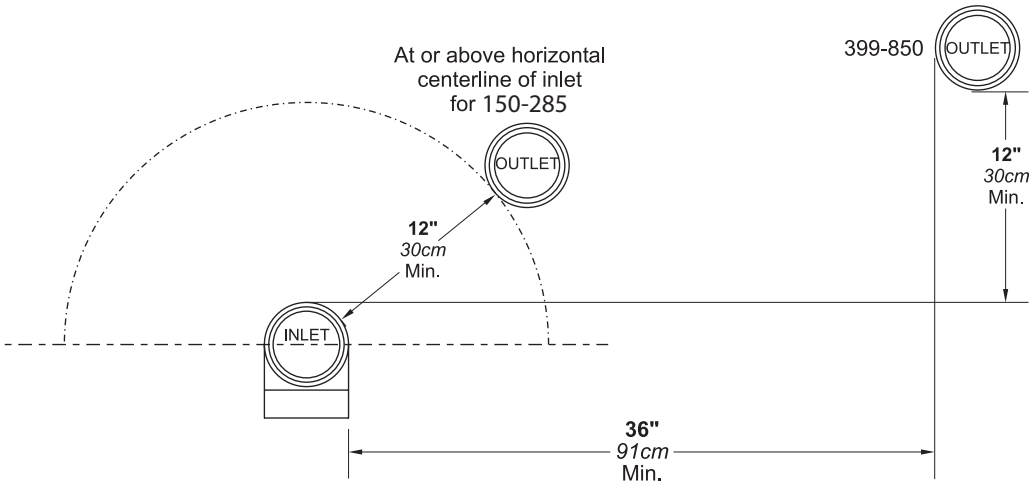

Figure 19. Minimum Venting Distance

		Canadian Installations[1]	U.S. Installations[2]
A =	Clearance above grade, veranda, porch, deck, or balcony	12 in (30 cm)	12 in (30 cm)
B =	Clearance to window or door that may be opened	• 6 in (15 cm) for appliances ≤ 10,000 Btuh (3 kW) • 12 in (30 cm) for appliances > 10,000 Btuh (3 kW) and ≤ 100,000 Btuh (30 kW) • 36 in (91 cm) for appliances >100,000 Btuh (30 kW)	• 6 in (15 cm) for appliances ≤ 10,000 Btuh (3 kW) • 9 in (23 cm) for appliances > 10,000 Btuh (3 kW) and ≤ 50,000 Btuh (15 kW) • 12 in (30 cm) for appliances >50,000 Btuh (15 kW)
C =	Clearance to permanently closed window	See Note 4	See Note 5
D =	Vertical clearance to ventilated soffit located above the terminal within a horizontal distance of 2 ft (61 cm) from the center line of the terminal	See Note 4	See Note 5
E =	Clearance to unventilated soffit	See Note 4	See Note 5
F =	Clearance to outside corner	See Note 4	See Note 5
G =	Clearance to inside corner	See Note 4	See Note 5
H =	Clearance to each side of centerline extended above meter / regulator assy	3 ft (91 cm) within a height of 15 ft (4.6 m)	See Note 5
I =	Clearance to service regulator vent outlet	3 ft (91 cm)	See Note 5
J =	Clearance to nonmechanical air supply inlet to building or the combustion air inlet to any other appliance	• 6 in (15 cm) for appliances ≤ 10,000 Btuh (3 kW) • 12 in (30cm) for appliances > 10,000 Btuh (3 kW) and ≤ 100,000 Btuh (30 kW) • 36 in (91 cm) for appliances > 100,000 Btuh (30 kW)	• 6 in (15 cm) for appliances ≤ 10,000 Btuh (3 kW) • 9 in (23cm) for appliances > 10,000 Btuh (3 kW) and ≤ 50,000 Btuh (15 kW) • 12 in (30 cm) for appliances > 50,000 Btuh (15 kW)
K =	Clearance to a mechanical air supply inlet	6 ft (1.83 m)	3 ft (91 cm) above if within 10 ft (3 m) horizontally
L =	Clearance above paved sidewalk or paved driveway located on public property	7 ft (2.13 m)†	7 ft (2.13 m) for mechanical draft systems (Category I appliances). Vents for Category II and IV appliances cannot be located above public walkways or other areas where condensate or vapor can cause a nuisance or hazard*
M =	Clearance under veranda, porch, deck, or balcony	12 in (30 cm)‡	See Note 5

† A vent shall not terminate directly above a sidewalk or paved driveway that is located between two single family dwellings and serves both dwellings.
‡ Permitted only if veranda, porch, deck, or balcony is fully open on a minimum of two sides beneath the floor.

Notes:
1) In accordance with the current CSA B149.1, Natural Gas and Propane Installation Code.
2) In accordance with the current ANSI Z223.1/NFPA 54, Natural Fuel Gas Code.
3) If locally adopted installation codes specify clearances different than those illustrated, then the most stringent clearance shall prevail.
4) For clearances not specified in CAN/CSA-B149, clearance is in accordance with local installation codes and the requirements of the gas supplier.
5) For clearances not specified in ANSI Z223.1/ NFPA 54, clearance is in accordance with local installation codes and the requirements of the gas supplier.
6) IMPORTANT: Terminal must be placed such that it remains a minimum of 12" above maximum expected snow line. Local codes may have more specific requirements, and must be consulted.

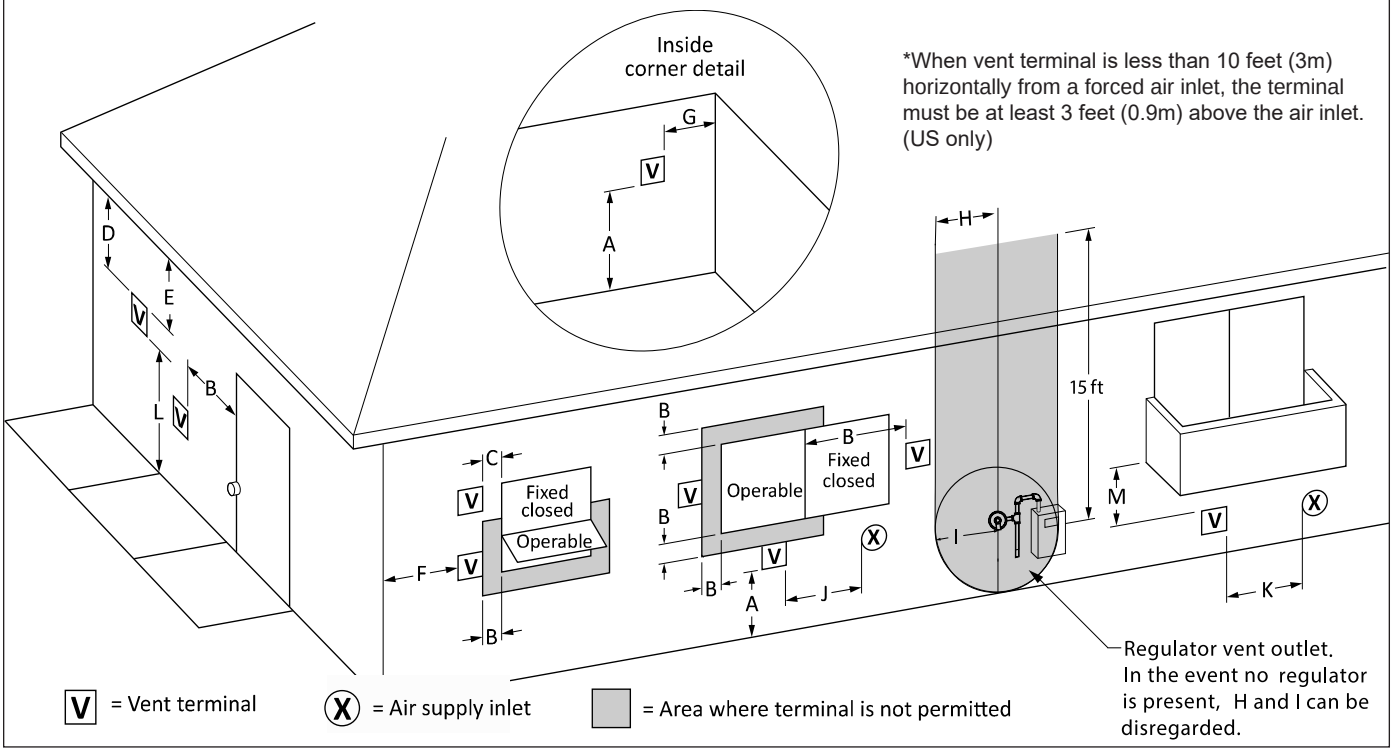

Figure 20. Combustion Air and Vent Through Side Wall

Locating Combustion Air Terminals (continued)

gas fueled equipment is installed in a crawl space or an attic, the hard-wired carbon monoxide with alarm and battery back-up may be installed on the next adjacent floor level.

b. In the event that the requirements of the subdivision cannot be met at the time of completion of installation, the owner shall have a period of thirty (30) days to comply with the above requirements, provided, however, that during said thirty (30) day period, a battery operated carbon monoxide detector with an alarm be installed.

2. **Approved Carbon Monoxide Detectors**

   Each carbon monoxide detector shall comply with NFPA 720 and be ANSI/UL 2034 listed and IAS certified.

3. **Signage**

   A metal or plastic identification plate shall be permanently mounted to the exterior of the building at a minimum height of eight (8) feet above grade directly in line with the exhaust vent terminal for horizontally vented gas fueled heating appliance or equipment. The sign shall read, in print no less than one-half (1/2) inch in size: “GAS VENT DIRECTLY BELOW, KEEP CLEAR OF ALL OBSTRUCTIONS.”

4. **Inspection**

   The state or local gas inspector of the side-wall horizontally vented gas fueled appliance shall not approve the installation unless, upon inspection, the inspector observes carbon monoxide detectors and signage installed in accordance with the provisions of 248 CMR 5.08(2)(a) 1-4.

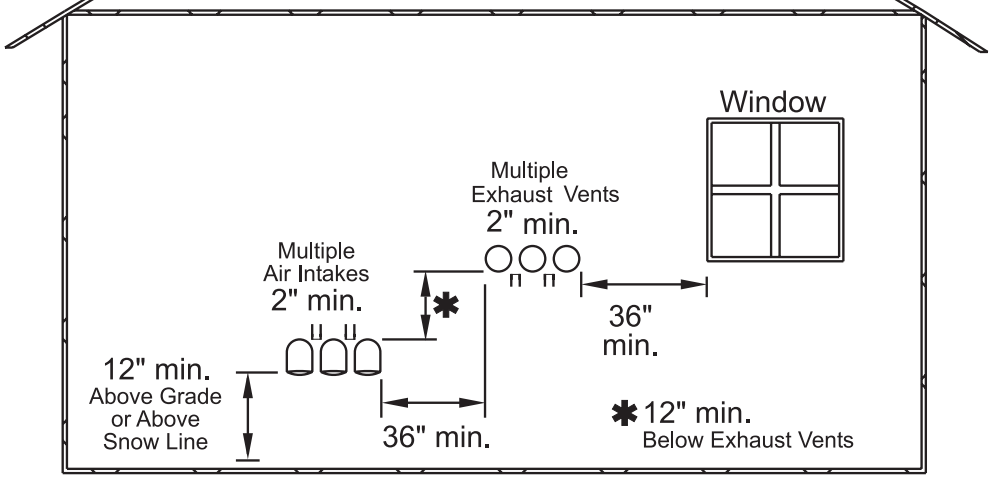

IMPORTANT: Terminals must be placed such that they remain a minimum of 12” above the expected snow line. Local codes may have more specific requirements and must be consulted. Refer to the NFPA 54 National Fuel Gas Code and your local codes for all required clearances for venting.

Figure 21. Multiple Side-Wall Terminals,

3.F Common Vent Test

NOTE: This section does not describe a method for common venting these high efficiency condensing units. It describes what must be done when a unit is removed from a common vent system. These units require special vent systems and fans for common vent. **See Section "3.D Common Venting" on page 26**, or contact the factory if you have questions about common venting these units.

⚠ WARNING

When an existing boiler is removed from a common venting system, the common venting system is likely to be too large for proper venting of the appliances remaining connected to it.

At the time of removal of an existing boiler, the following steps shall be followed with each appliance remaining connected to the common venting system placed in operation, while the other appliances remaining connected to the common venting system are not in operation.

1. Seal any unused openings in the common venting system.

2. Visually inspect the venting system for proper size and horizontal pitch and determine there is no blockage or restriction, leakage, corrosion and other deficiencies which could cause an unsafe condition.

3. Insofar as it is practical, close all building doors and windows and all doors between the space in which the appliances remaining connected to the common venting system are located and other spaces of the building. Turn on clothes dryers and any appliance not connected to the common venting system. Turn on any exhaust fans, such as range hoods and bathroom exhausts, so they will operate at maximum speed. Do not operate a summer exhaust fan. Close fireplace dampers.

4. Place in operation the appliance being inspected. Follow the lighting instructions. Adjust the thermostat so the appliance will operate continuously.

5. Test for spillage at the draft hood relief opening after 5 minutes of main burner operation. Use the flame of a match or candle, or smoke from a cigarette, cigar or pipe.

6. After it has been determined that each appliance remaining connected to the common venting system properly vents when tested as outlined above, return doors, windows, exhaust fans, fireplace dampers and any other gas burning appliance to their previous conditions of use.

7. Any improper operation of the common venting system should be corrected so that the installation conforms to the National Fuel Gas Code, ANSI Z223.1/NFPA 54 and/or CSA B149.1, Installation Codes. When resizing any portion of the common venting system, the common venting system should be resized to approach the minimum size as determined using the appropriate tables and guidelines in the National Fuel Gas Code, ANSI Z223.1 NFPA 54 and/or CSA B149.1, Installation Codes.

⚠ AVERTISSEMENT

Lorsqu'une chaudière existante est supprimée d'un système de ventilation commun, le système de ventilation commun est susceptible d'être trop grande pour garantir une aération correcte des appareils restant connecté à elle. Lors de la dépose d'une chaudière existante, les étapes suivantes doivent être suivies avec chaque appareil reste connecté à la système de ventilation commun mis en opération, alors que les autres appareils connectés restants à la politique commune de système d'aération ne sont pas en opération.

1. Joint les ouvertures inutilisées dans le système de ventilation commun.

2. Inspecter visuellement le système de ventilation à la taille correcte et espacement horizontal et déterminer il n'y a pas de blocage ou de restriction, de fuite, de corrosion et d'autres lacunes que pourrait causer une condition dangereuse

3. Dans la mesure où cela est pratique, fermer tous les bâtiments de portes et fenêtres et toutes les portes entre l'espace dans lequel les appareils connectés restants à la système de ventilation commun sont situés et d'autres espaces du bâtiment. Allumer les sécheuses et tout appareil non connecté au système de ventilation commun. Mettez sous tension tous les ventilateurs d'échappement d'air, tels que les hottes de cuisine et salle de bains exhausts, afin qu'ils fonctionnent à la vitesse maximum. Ne pas faire fonctionner un ventilateur d'échappement d'été. Fermer cheminée amortisseurs.

4. Place dans le fonctionnement de l'appareil inspecté. Suivez les instructions d'éclairage. Réglez le thermostat de sorte que l'appareil fonctionnera en continu.

5. Test pour les pertes sur les projets d'ouverture de secours de capot après 5 minutes de fonctionnement du brûleur principal. Utilisez la flamme d'une allumette ou une bougie allumée, ou de la fumée d'une cigarette, un cigare ou une pipe.

6. Après qu'il a été déterminé que chaque appareil reste connecté au système de ventilation commun correctement évents lorsque testé comme décrit ci-dessus, le retour des portes, des fenêtres, ventilateurs d'échappement, amortisseurs de cheminée et tout autre appareil de combustion du gaz à leurs conditions d'utilisation précédente.

7. Tout fonctionnement incorrect du système de ventilation commun devrait être corrigée de sorte que l'installation est conforme aux code de gaz combustible National, ANSI Z223.1/NFPA 54 et/ou CSA B149.1, Codes d'installation. Lors du redimensionnement de toute portion de la système de ventilation commun, le système de ventilation commun doit être redimensionné à l'approche de la taille minimale, déterminée en utilisant les tableaux appropriés et des lignes directrices dans le National Code de gaz combustible, ANSI Z223.1 NFPA 54 et/ou CSA B149.1, Codes d'installation.

SECTION 4
GAS SUPPLY AND PIPING

All Installations must conform to the National Fuel Gas Code ANSI Z223.1/NFPA54, and/or local codes. In Canada, the installation must conform to the latest edition of CSA B149.1 Natural Gas and Propane Gas Installation Code, and/or local codes. Gas piping should be supported by suitable hangers or floor stands, not the appliance.

Review the following instructions before proceeding with the installation.

1. Verify that the appliance is fitted for the proper type of gas by checking the rating plate. The unit will function properly without the use of high altitude modification at elevations up to 10,000 feet (3050 m).
2. Verify that the Min and Max inlet gas supply pressures are within the parameters shown in Table 8.
3. Refer to Table 9 to size the piping.
4. Run gas supply line in accordance with all applicable codes.
5. Locate and install manual shutoff valves in accordance with state and local requirements.
6. A sediment trap must be provided upstream of the gas controls.
7. All threaded joints should be coated with piping compound resistant to action of liquefied petroleum gas.
8. The appliance and its individual shutoff valve must be disconnected from the gas supply piping during any pressure testing of that system at test pressures in excess of 1/2 PSIG (3.45kPa).
9. The unit must be isolated from the gas supply system by closing its individual manual shutoff valve during any pressure testing of the gas supply piping system at test pressures equal to or less than 1/2 PSIG (3.45kPa).
10. The appliance and its gas connection must be leak tested before placing it in operation.
11. Purge all air from gas lines.

Inlet Gas Supply Pressure		
	Min”	Max
Natural Gas	3.5” W.C.	10.5” W.C.
Propane	8” W.C.	13” W.C.

Table 8. Gas Pressure

⚠ WARNING

If an inline high gas pressure regulator is used, it MUST BE of the lockup type and located a minimum of 10 feet from the unit. Failure to do so may result in insufficient gas volume supplied to the unit.

⚠ WARNING:
Open flame can cause gas to ignite and result in property damage, severe injury, or loss of life.

NOTE: This appliance and all other gas appliances sharing the gas supply line must be firing at maximum capacity to properly measure the inlet supply pressure. The pressure can be measured at the supply pressure port on the gas valve. Low gas pressure could be an indication of an undersized gas meter, undersized gas supply lines and/or an obstructed gas supply line. Some units are equipped with low and high gas pressure switches that are integrally vent limited. These types of devices do not require venting to atmosphere.

To size piping:

Measure linear distance from meter outlet to last boiler. Add total input of all boilers and divide by 1000 to obtain cu ft / hr required. Add total equivalent length of fittings used according to Table 10 on page 32. Align total length (pipe and fittings) on left side column of Table 11 on page 32 with highest cubic feet of gas required.

Required			
Propane		Natural Gas	
Size	CUFT/HR	Size	CUFT/HR
150	60	150	150
199	80	199	199
285	114	285	285
399	160	399	399
500	200	500	500
600	240	600	600
750	300	750	750
850	340	850	850

Notes:
Consult and confirm with Applicable Fuel Gas Code before beginning work. Verify gas inlet pressure is correct using Table 8 before starting boiler.

Table 9. To Size Your Gas Piping

4 Gas Supply and Piping (continued)

EQUIVALENT LENGTHS OF STRAIGHT PIPE FOR TYPICAL SCH 40 FITTINGS						
	NOMINAL PIPE SIZE					
FITTING	1/2”	3/4”	1”	1-1/4”	1-1/2”	2”
	LINEAR FEET					
90° ELBOW	3.6	4.4	5.2	6.6	7.4	8.5
TEE	4.2	5.3	6.6	8.7	9.9	12

Table 10. Equivalent Lengths of Straight Pipe, SCH 40

SCH 40 METAL PIPE CAPACITY FOR 0.60 SPECIFIC GRAVITY NATURAL GAS						
	NOMINAL PIPE SIZE @ 0.30” W.C. PRESSURE DROP					
LENGTH	1/2”	3/4”	1”	1-1/4”	1-1/2”	2”
FT	CUBIC FEET OF GAS PER HOUR					
20	92	190	350	730	1100	2100
40		130	245	500	760	1450
60		105	195	400	610	1150
80		90	170	350	530	990
100			150	305	460	870

Table 11. Nominal Pipe Size @ 0.30” W.C. Press Drop

SCHED 40 METAL PIPE CAPACITY FOR 1.50 SPECIFIC GRAVITY UNDILUTED PROPANE						
	NOMINAL PIPE SIZE @ 11” W.C. INLET AND 0.5” W.C. PRESSURE DROP					
SIZE	1/2”	3/4”	1”	1-1/4”	1-1/2”	2”
LENGTH HOUR	MAXIMUM CAPACITY IN THOUSANDS OF BTU PER					
20	200	418	787	1616	2422	4664
40	137	287	541	1111	1664	3205
60	110	231	434	892	1337	2574
80	94	197	372	763	1144	2203
100	84	175	330	677	1014	1952

NOTES:

1. Follow all local and national LP gas codes for line sizing and equipment requirements.

Table 12. Nominal Pipe Size @ 0.11” W.C. and 0.5” Press Drop

SECTION 5
PUMP REQUIREMENTS

5.A Boiler Flow and Head Requirements

	15		20		25		30		35	
	Flow	H/L	Flow	H/L	Flow	H/L	Flow	H/L	Flow	H/L
	gpm	feet	gpm	feet	gpm	feet	gpm	feet	gpm	feet
399	50.5	33.8	39.0	22.8	31.0	16.0	25.0	11.5	22.0	9.5
500	63.5	35.6	48.0	22.2	38.0	14.9	32.0	11.1	27.0	8.3
600	75.9	48.3	58.0	30.5	46.0	20.6	38.0	14.9	33.0	11.7
750	95.0	64.5	72.0	38.0	58.0	25.0	48.0	17.5	41.0	13.0
850	108.0	56.6	81.0	34.8	65.0	23.9	54.0	17.4	46.0	13.3

	8		11		14		17		19	
	Flow	H/L	Flow	H/L	Flow	H/L	Flow	H/L	Flow	H/L
	lpm	m	lpm	m	lpm	m	lpm	m	lpm	m
399	191.2	10.3	147.6	6.9	117.3	4.9	94.6	3.5	83.3	2.9
500	240.4	10.9	181.7	6.8	143.8	4.5	121.1	3.4	102.2	2.5
600	287.3	14.7	219.6	9.3	174.1	6.3	143.8	4.5	124.9	3.6
750	359.6	19.7	272.5	11.6	219.6	7.6	181.7	5.3	155.2	4.0
850	408.8	17.3	306.6	10.6	246.1	7.3	204.4	5.3	174.1	4.1

Table 13. Boiler Flow and Head Requirements

5.B Water Heater Flow and Head Requirements

	Flow	H/L	Temp Rise
	gpm	feet	F
150	15	26	19
199	22	20	17
285	30	22	18
399	45	28	17
500	52	26	18
600	52	26	22
750	60	27	24
850	67	25	24

	Flow	H/L	Temp Rise
	lpm	m	C
150	56.8	7.9	10
199	83.3	6.1	9
285	113.6	6.7	10
399	170.3	8.5	9
500	196.8	7.9	10
600	196.8	7.9	12
750	227.1	8.2	13
850	253.6	7.6	13

Table 14. Water Heater Flow and Head Requirements

40		45		50		55		60	
Flow	H/L	Flow	H/L	Flow	H/L	Flow	H/L	Flow	H/L
gpm	feet	gpm	feet	gpm	feet	gpm	feet	gpm	feet
19.0	7.6	16.8	6.3	15.2	5.4	13.8	4.6	12.6	4.0
24.0	6.8	21.1	5.5	19.0	4.6	17.3	3.9	15.8	3.4
29.0	9.4	25.3	7.5	22.8	6.3	20.7	5.3	19.0	4.6
36.0	10.1	31.7	7.9	28.5	6.5	25.9	5.4	23.8	4.6
41.0	10.9	35.9	8.7	32.3	7.3	29.4	6.2	26.9	5.3

22		25		28		31		33	
Flow	H/L	Flow	H/L	Flow	H/L	Flow	H/L	Flow	H/L
lpm	m	lpm	m	lpm	m	lpm	m	lpm	m
71.9	2.3	63.6	1.9	57.5	1.6	52.2	1.4	47.7	1.2
90.8	2.1	79.9	1.7	71.9	1.4	65.5	1.2	59.8	1.0
109.8	2.9	95.8	2.3	86.3	1.9	78.4	1.6	71.9	1.4
136.3	3.1	120.0	2.4	107.9	2.0	98.0	1.6	90.1	1.4
155.2	3.3	135.9	2.7	122.3	2.2	111.3	1.9	101.8	1.6

SECTION 6
WATER CONNECTIONS - Part A

Section 6 is divided into two parts. Section 6A covers Boiler units designed for hydronic heating. Section 6B covers Heater models, which are designed exclusively for "volume water" domestic hot water applications. Refer to the proper section for instructions on installing and piping your product. Refer to Table 9 for the connection pipe sizes required.

6.A Boiler

6.A.1 Boiler Water Piping -

NOTE: This appliance must be installed in a closed pressure system with a minimum of 12 psi (82.7kPa) static pressure at the boiler.

Water piping should be supported by suitable hangers or floor stands. Do not support piping with this appliance. Due to expansion and contraction of copper pipe, consideration should be given to the type of hangers used. Rigid hangers may transmit noise through the system resulting from the piping sliding in the hangers. It is recommended that padding be used when rigid hangers are installed. Maintain 1" (2.5cm) clearance to combustibles for hot water pipes.

Pipe the discharge of the relief valve (full size) to a drain or in a manner to prevent injury in the event of pressure relief. Install an air purger, an air vent, a diaphragm-type expansion tank, and a hydronic flow check in the system supply loop. Minimum fill pressure must be 12psig (82.7kPa). Install shutoff valves where required by code.

BOILER SIZE	PIPE SIZE, INCHES	HEATER SIZE	PIPE SIZE, INCHES
-	-	150	1¼
-	-	199	1¼
-	-	285	2
399	1¼	399	2
500	1½	500	2
600	1½	600	2
750	2	750	2
850	2	850	2

Table 15. Water Connection Pipe Sizes

This unit's efficiency is higher with lower return water temperatures. Therefore, to get the most of low return temperature with multiple boilers, pipe as shown in Figure 22 through Figure 28

All boiler models can be ordered with a pump. When the pump is included with the boiler, the boiler must be located within 15 feet (4.6m) of the supply/return header (or hydraulic separator). These units must be piped in a primary-secondary fashion, such that the pump that is included only serves the boiler. The pumps are sized for the headloss of the boiler and a maximum of 30 feet (9.1m) of piping that is the same size as the boiler water connections See Table 15.

If longer pipe lengths or alternate piping methods are being used, the pump must be sized for the boiler and the piping it will serve. Table 13 on page 32 shows water flow and headloss data for the boiler. The manufacturer strongly recommends primary-secondary piping.

6.A.2 Boiler Cold Water Make-Up

1. Connect the cold water supply to the inlet connection of an automatic fill valve.
2. Install a suitable back flow preventer between the automatic fill valve and the cold water supply.
3. Install shut off valves where required.

The boiler piping system of a hot water heating boiler connected to heating coils located in air handling appliances where they may be exposed to refrigerated air circulation must be equipped with flow control valves or other automatic means to prevent gravity circulation of the boiler water during the cooling cycle.

A boiler installed above radiation level, or as required by the authority having jurisdiction, must be provided with a low water cutoff device either as a part of the boiler or at the time of boiler installation.

6.A.3 Condensate Drain

A condensate drain trap is built into the unit.
No additional or secondary trap is required. .

Connect a 3/4” PVC pipe between the drain connection and a floor drain (or a condensate pump if a floor drain is not accessible).

The condensate drain must be installed so as to prevent accumulation of condensate. When a condensate pump is not used, the tubing must continuously slope downward toward the drain with no spiraling. Consult local codes for the proper disposal method for the condensate.

If installing in a location that may experience freezing temperatures, precautions must be taken to prevent water in the heat exchanger and condensate inside and outside of the boiler from freezing. Damage due to freezing water or condensate is not covered by the warranty.

⚠ Caution

Condensate is mildly acidic (pH = 5), and may harm some floor drains and/or pipes, particularly those that are metal. Ensure that the drain, drainpipe, and anything that will come in contact with the condensate can withstand the acidity, or neutralize the condensate before disposal. **Damage caused by failure to install a neutralizer kit or to adequately treat condensate will not be the manufacturer’s responsibility.**

6.A.4 Freeze Protection

⚠ WARNING

Glycol must not be used in domestic hot water applications. Refer to Section 6B.4 for instructions on Heater, domestic hot water freeze protection.

Indoor units are certified for indoor use only. Outdoor units are additionally certified for outdoor use.

Proper precautions for freeze protection are recommended for boiler installations in areas where the danger of freezing exists.

Power outage, interruption of gas supply, failure of system components, activation of safety devices, etc., may prevent a boiler from firing. **Any time a boiler is subjected to freezing conditions, and the boiler is not able to fire, and/or the water is not able to circulate, there is a risk of freezing in the boiler or in the pipes in the system.** When water freezes, it expands which may result in bursting of pipes, or damage to the boiler, which could result in leaking or flooding conditions.

Do not use automotive antifreeze. To help prevent freezing, the use of inhibited glycol concentrations between 20% and 35% glycol. Typically, this concentration will serve as burst protection for temperatures down to approximately -5°F (-20°C). If temperatures are expected to be lower than -5°F (-20°C), glycol concentrations up to 50% can be used. *When concentrations greater than 35% are used, water flow rates must be increased to maintain a 20°F to 25°F temperature rise through the boiler.*

NOTE: Manufacturers supplied pumps are not all capable of maintaining the reduced temperature rise required with glycol concentrations greater than 35%. If glycol concentrations required are greater than 35% a field supplied pump should be used.

⚠ Caution

Different glycol products may provide varying degrees of protection. Glycol products must be maintained properly in a heating system, or they may become ineffective. Consult the glycol specifications, or the glycol manufacturer, for information about specific products, maintenance of solutions, and set up according to your particular conditions.

6.A.5 Boiler Suggested Piping Schematics

Figure 22 through Figure 28 show suggested piping configurations for Boilers. These diagrams are only meant as a guide. All components or piping required by local code must be installed.

6.A.6 Recognized Chemicals

The following manufacturers offer glycols, inhibitors, and anti foamants that are suitable for use in these units. Please refer to the manufacturers instructions for proper selection and application.

1. Sentinel Performance Solutions Group
2. Hercules Chemical Company
3. Dow Chemical Company

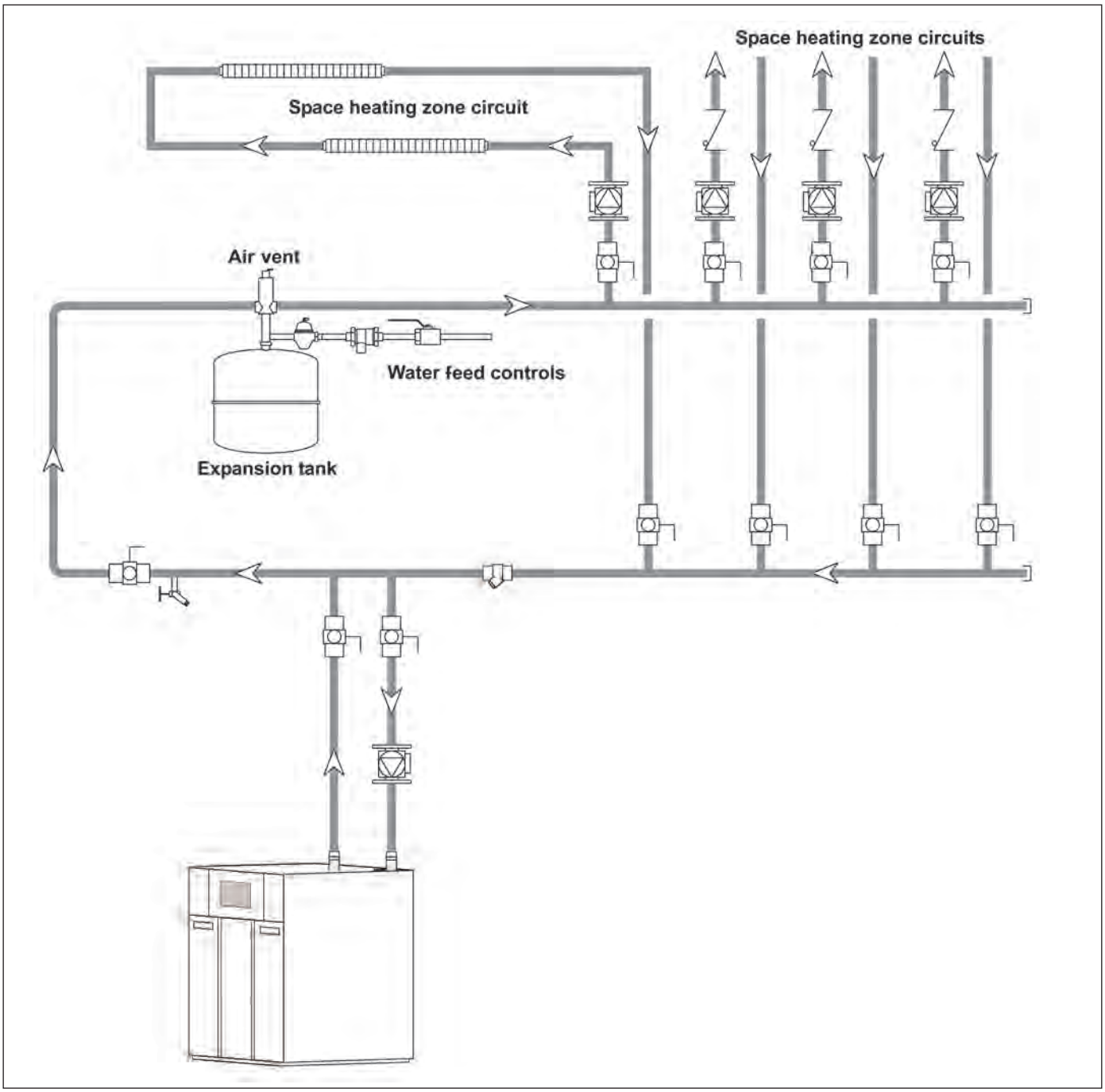

Figure 22. Hydronic Piping — Single Boiler, Zoning with Circulators

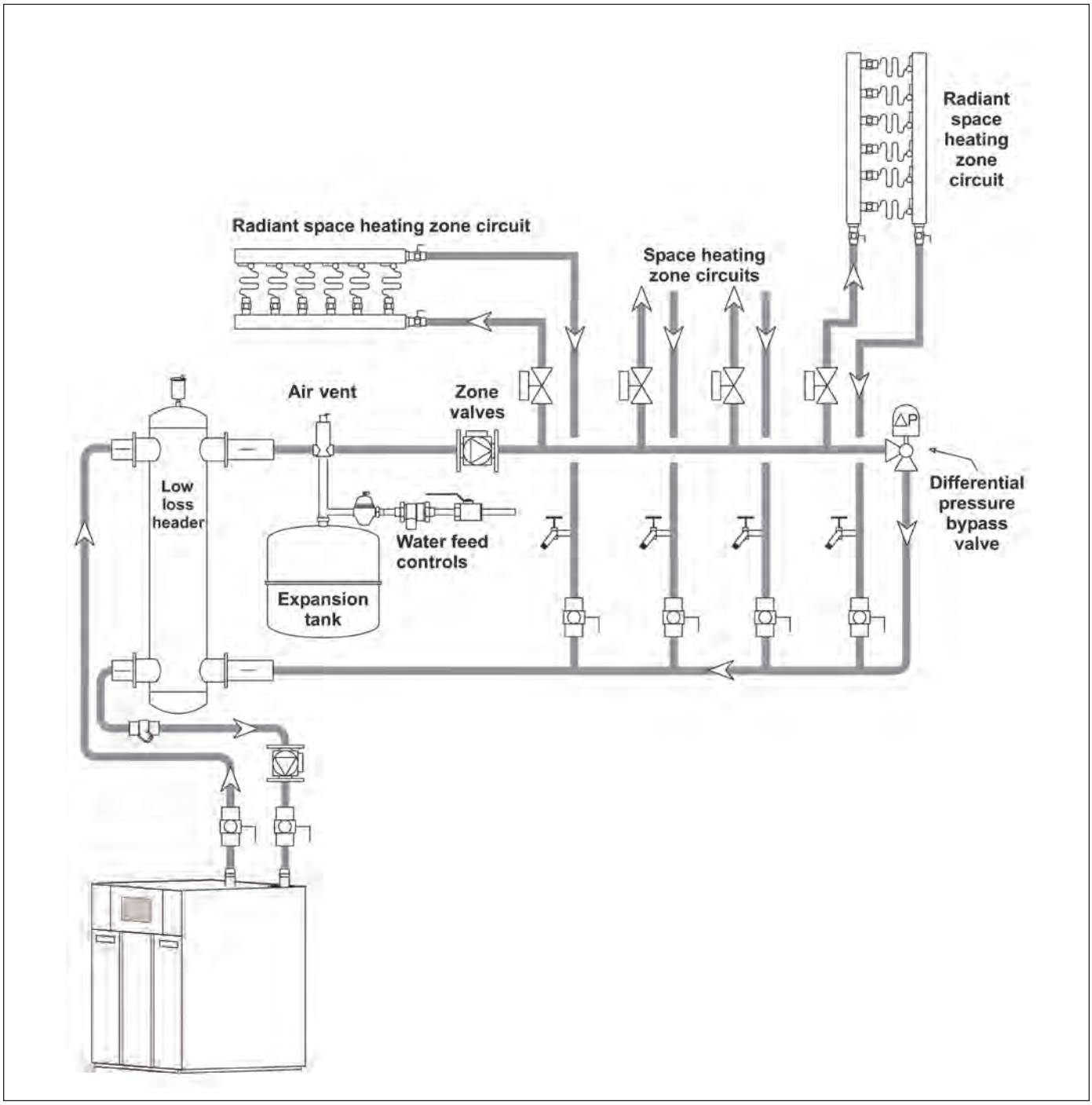

Figure 23. Hydronic Piping — Single Boiler, Low Temp Radiant Space Heating Using Low Loss Header and Zone Valves

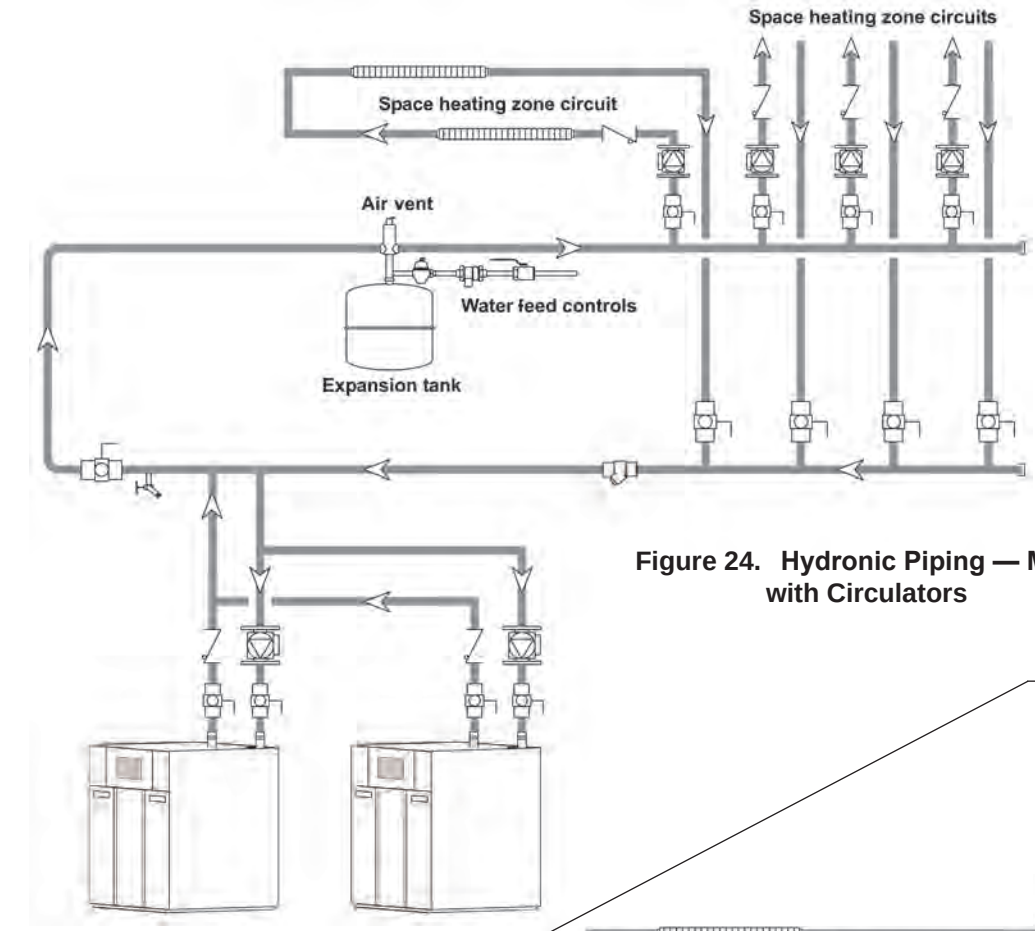

Figure 24. Hydronic Piping — Multiple Boilers, Zoning with Circulators

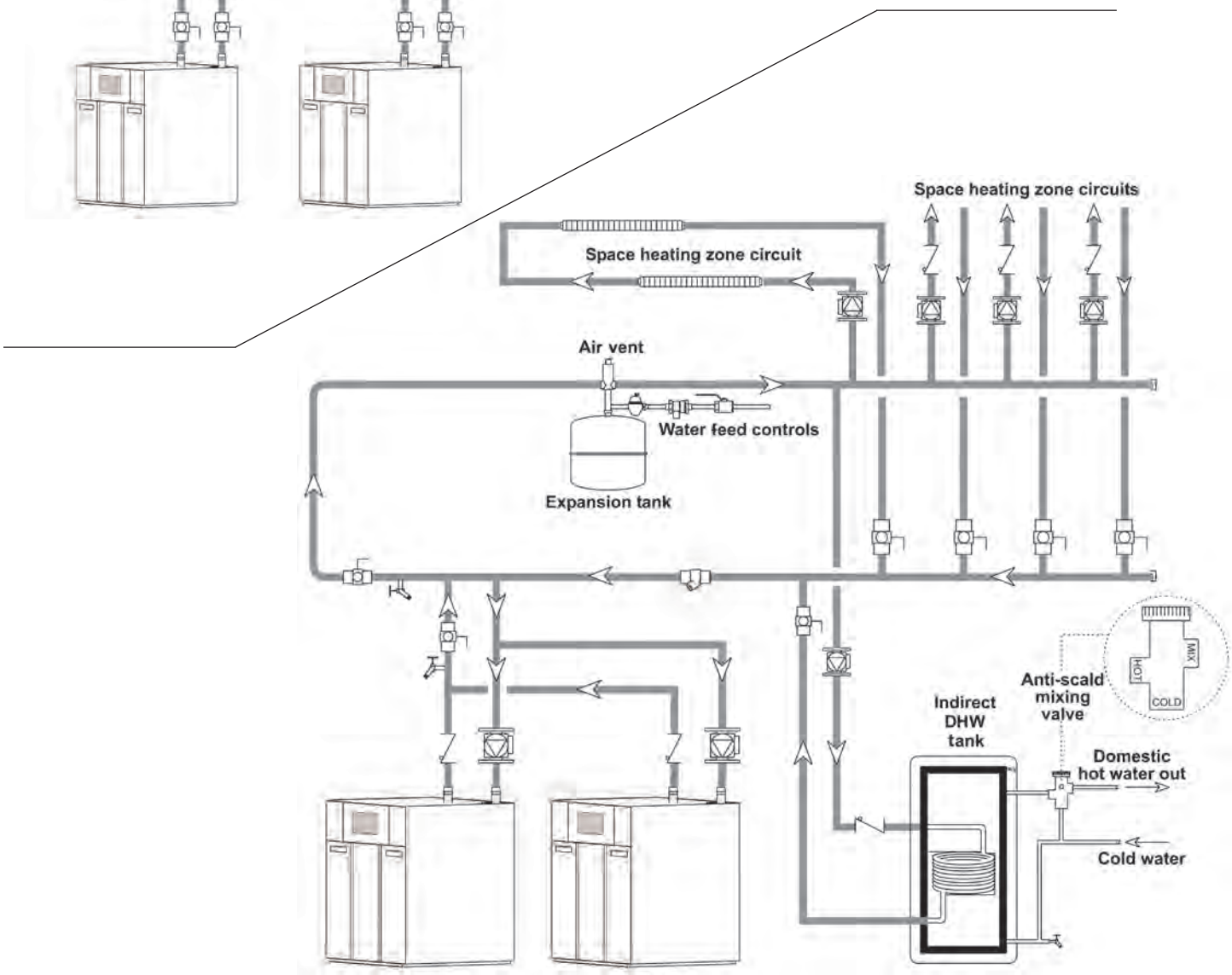

Figure 25. Hydronic Piping — Multiple Boilers with Indirect DHW Tank Piped from System Loop

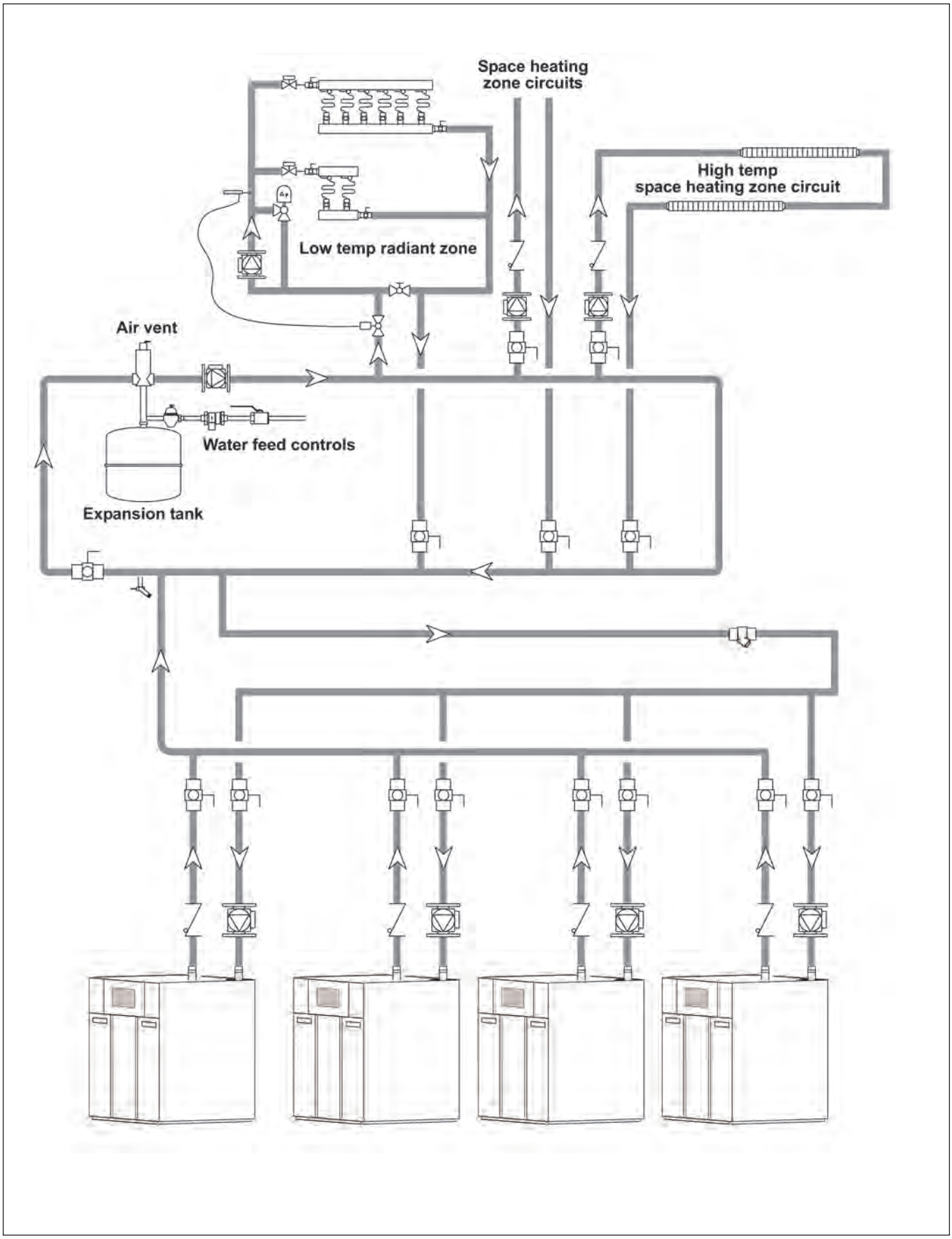

Figure 26. Hydronic Piping — Multiple Boilers, Reverse Return, Multi-Temp Zones, Zoning with Circulators

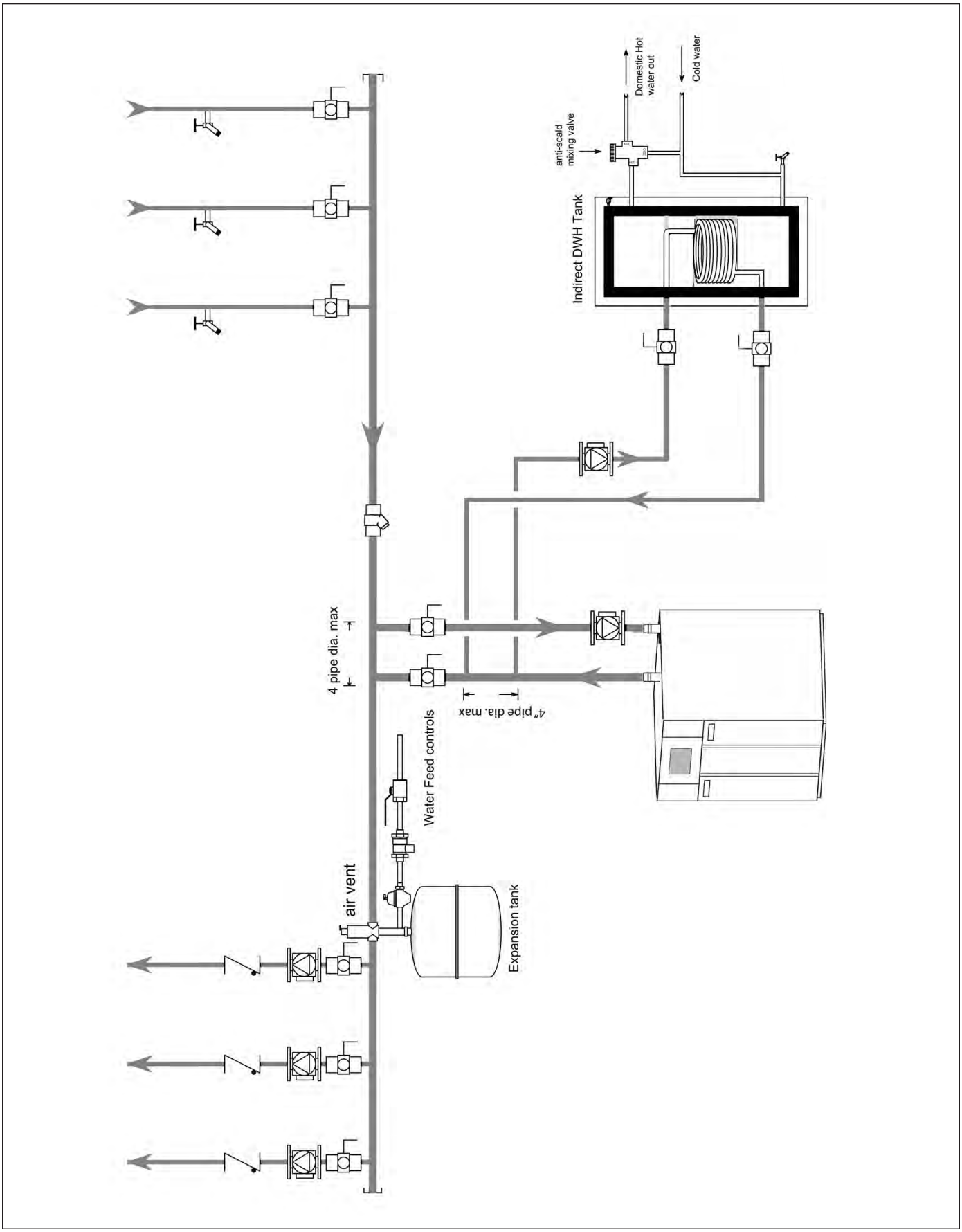

Figure 27. Hydronic Piping — Heating Zones with Indirect DHW Tank Piped with Zone Pumps

The indirect DHW tank is piped directly off of the boiler.

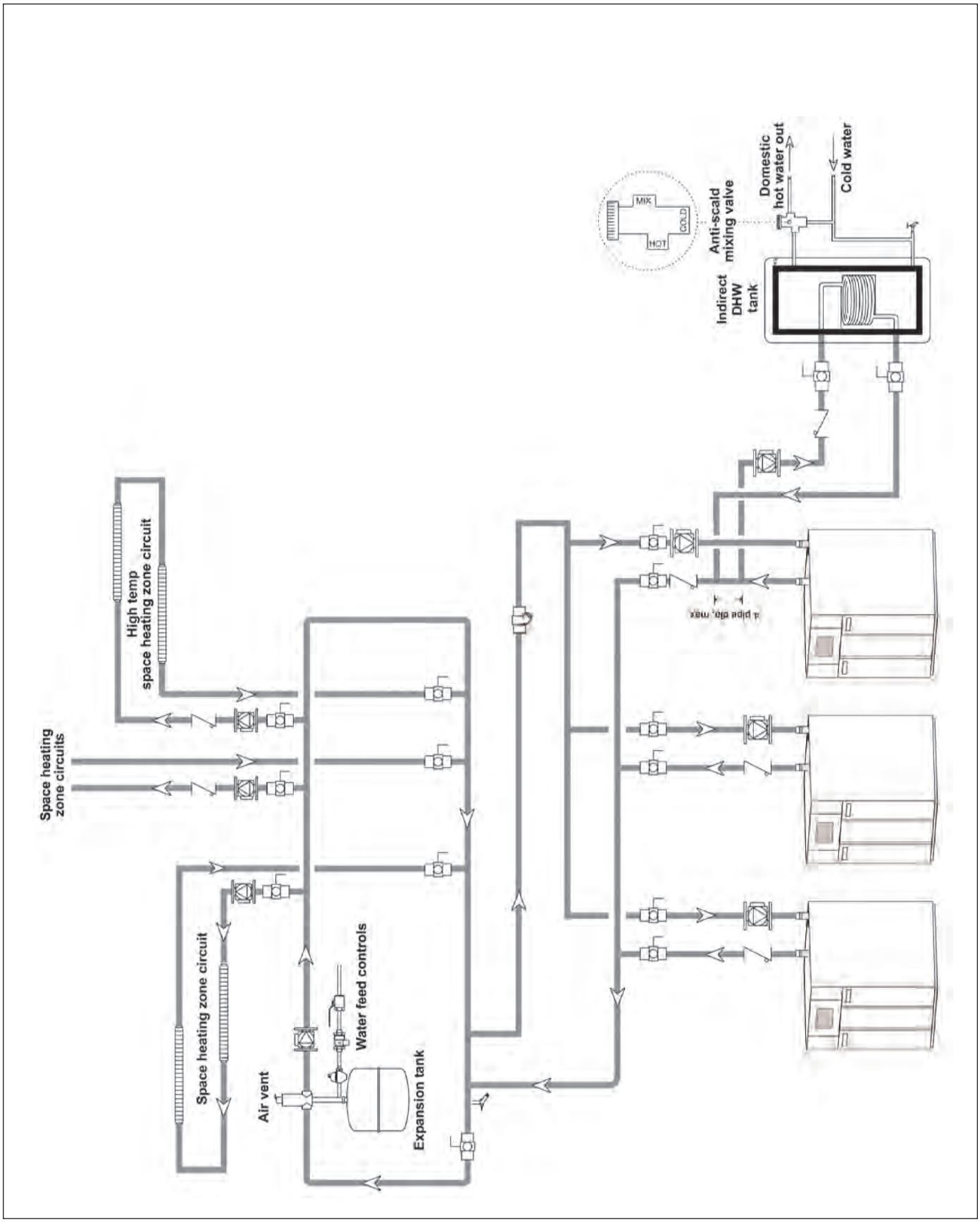

Figure 28. Hydronic Piping, Multiple Boilers with Indirect DHW Off of One Boiler

SECTION 6
WATER CONNECTIONS - Part B

Section 6 is divided into two parts. Section 6A covers Boiler units designed for hydronic heating. Section 6B covers Heater models, which are designed exclusively for "volume water" domestic hot water applications. Refer to the proper section for instructions on installing and piping your product. Refer to Table 15 on page 34 for the connection pipe sizes required.

6.B Water Heater

6.B.1 Water Quality

Water heaters must be installed in water conditions of 10gpg hardness or less with a pH range of 8.2 to 9.5. Operating the Heater in water with higher hardness levels will cause heat exchanger fouling, erosion, or corrosion leading to premature component failure, reduced efficiency, heat exchanger failure or system failure. Failure of this type will not be warranted. If the water in use exceeds the conditions recommended, a water softener or other device should be installed to improve water quality.

6.B.2 Piping Requirements

Water piping should be supported by suitable hangers and floor stands. Do not support piping with the appliance. Due to expansion and contraction of copper pipe, consideration should be given to the type of hangers and supports used. Rigid hangers may transmit noise through the system resulting from piping sliding in the hangers. It is recommended that padding be used when rigid hangers are installed. Maintain 1" (2.5cm) clearance to combustibles for hot water pipes.

Pipe the discharge of the relief valve (full size) to the drain or in a manner to prevent injury in the event of pressure relief. Install a diaphragm-type expansion tank, flow check, and shutoff valves where needed or as required by code.

Most water heaters can be ordered with a pump that is sized to serve only one heater. When the pump is included with the heater, the heater must be located within 15 feet (4.6m) of the storage tank. The pumps are sized for the headloss of the heater and a maximum of 30 feet (9.1m) of piping that is the same size as the heater water connections. See Table 15 on page 34.

If longer pipe lengths or alternate piping methods are being used, the pump must be sized for the heater and the piping it will serve. The manufacturer recommends that each heater have its own pump. Table 13 shows water flow and headloss data for the heater. Improper pipe sizing may result in conditions that cause internal scale buildup and failure of the heat exchanger.

6.B.3 Cold Water Make-Up

The cold water make-up may be connected to the tank or to the inlet of the boiler as shown in Figure 29 through Figure 32. Install back flow preventers and shut offs where needed or required by code. Pipe sizes may have to be increased to accomodate cold water make-up flow.

6.B.4 Condensate Drain

A condensate drain trap is built into the unit.

Connect a 3/4" PVC pipe between the drain connection and a floor drain (or a condensate pump if a floor drain is not accessible).

The condensate drain must be installed so as to prevent accumulation of condensate. When a condensate pump is not used, the tubing must continuously slope downward toward the drain with no spiraling.

Consult local codes for the proper disposal method for the condensate.

⚠ Caution

Condensate is mildly acidic (pH = 5), and may harm some floor drains and/or pipes, particularly those that are metal. Ensure that the drain, drainpipe, and anything that will come in contact with the condensate can withstand the acidity, or neutralize the condensate before disposal. **Damage caused by failure to install a neutralizer kit or to adequately treat condensate will not be the manufacturer's responsibility.**

6.B.5 Freeze Protection

These units are certified for outdoor use but they should not be subjected to freezing temperatures. In an event such as power outage, component failure or other issue when freezing is likely, the heater and system must be drained to avoid the risk of damage due to freezing. Glycol must ***not*** be used in volume water heating applications.

6.B.6 Heater Suggested Piping Schematics

Figure 29 through Figure 32 show suggested piping configurations for Heater boilers. These diagrams are only meant as guides. All components or piping required by local code must be installed.

.

NOTES:
1. Optional CWMU & Recirc. line location.
2. Locate Heater DHW sensor or remote aquastat well in lower 1/3 of tank.
3. Back flow preventer may be required - check local codes.

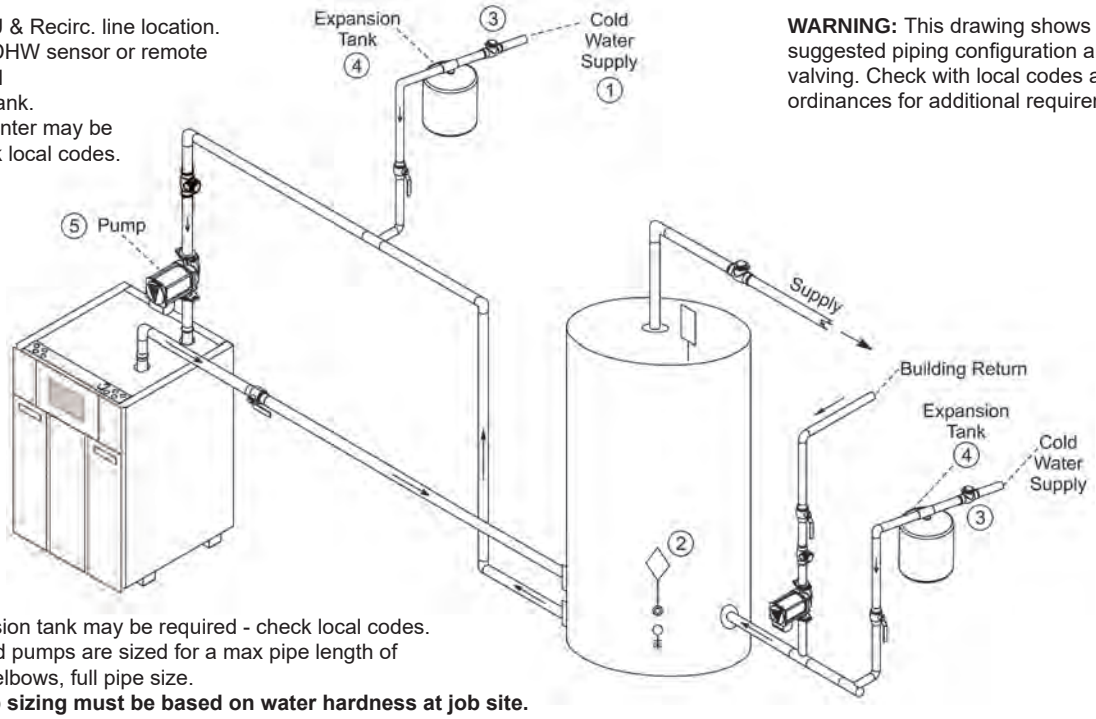

WARNING: This drawing shows suggested piping configuration and valving. Check with local codes and ordinances for additional requirements.

4. Thermal expansion tank may be required - check local codes.
5. Factory supplied pumps are sized for a max pipe length of 30' total, 6-90° elbows, full pipe size.
6. **Caution: Pump sizing must be based on water hardness at job site.**

Figure 29. DHW Piping, One Heater, One Vertical Tank

NOTES:
1. Optional CWMU & Recirc. line location.
2. Locate Heater DHW sensor or remote aquastat well in lower 1/3 of tank.
3. Back flow preventer may be required - check local codes.
4. Thermal expansion tank may be required - check local codes.
5. Factory supplied pumps are sized for a max pipe length of 30' total, 6-90° elbows, full pipe size.
6. **Caution: Pump sizing must be based on water hardness at job site.**

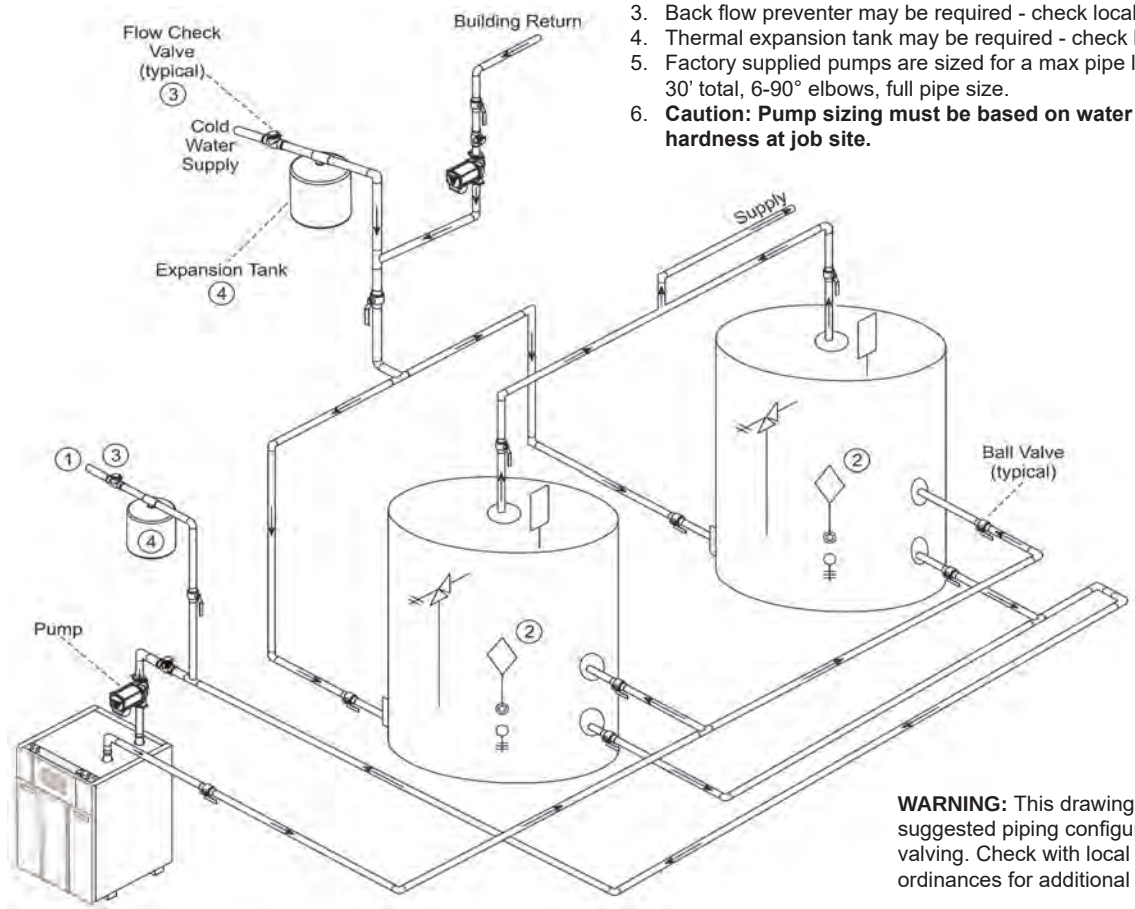

WARNING: This drawing shows suggested piping configuration and valving. Check with local codes and ordinances for additional requirements.

Figure 30. DHW Piping, One Heater, Two Vertical Tanks

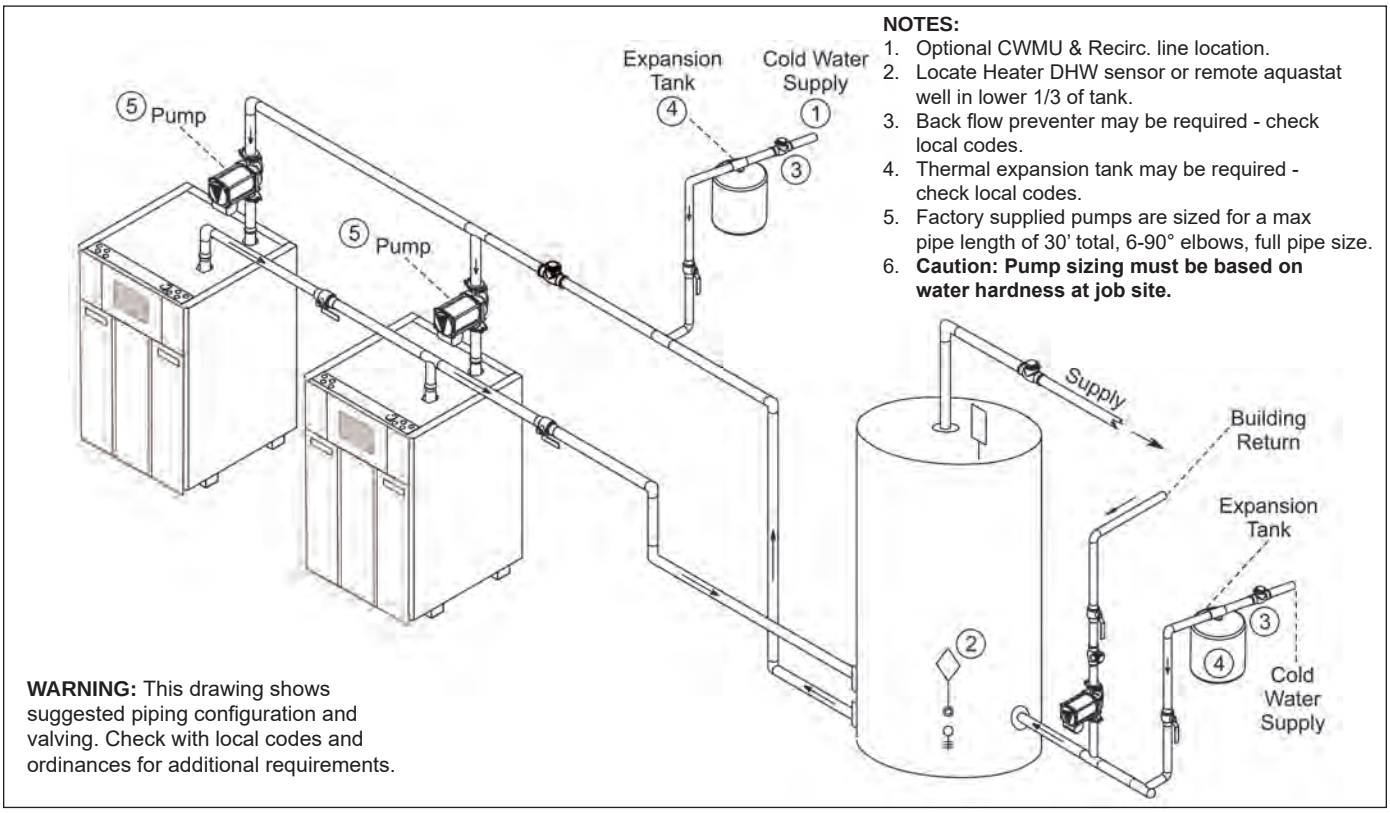

Figure 31. DHW Piping, Two Heaters, One Vertical Tank

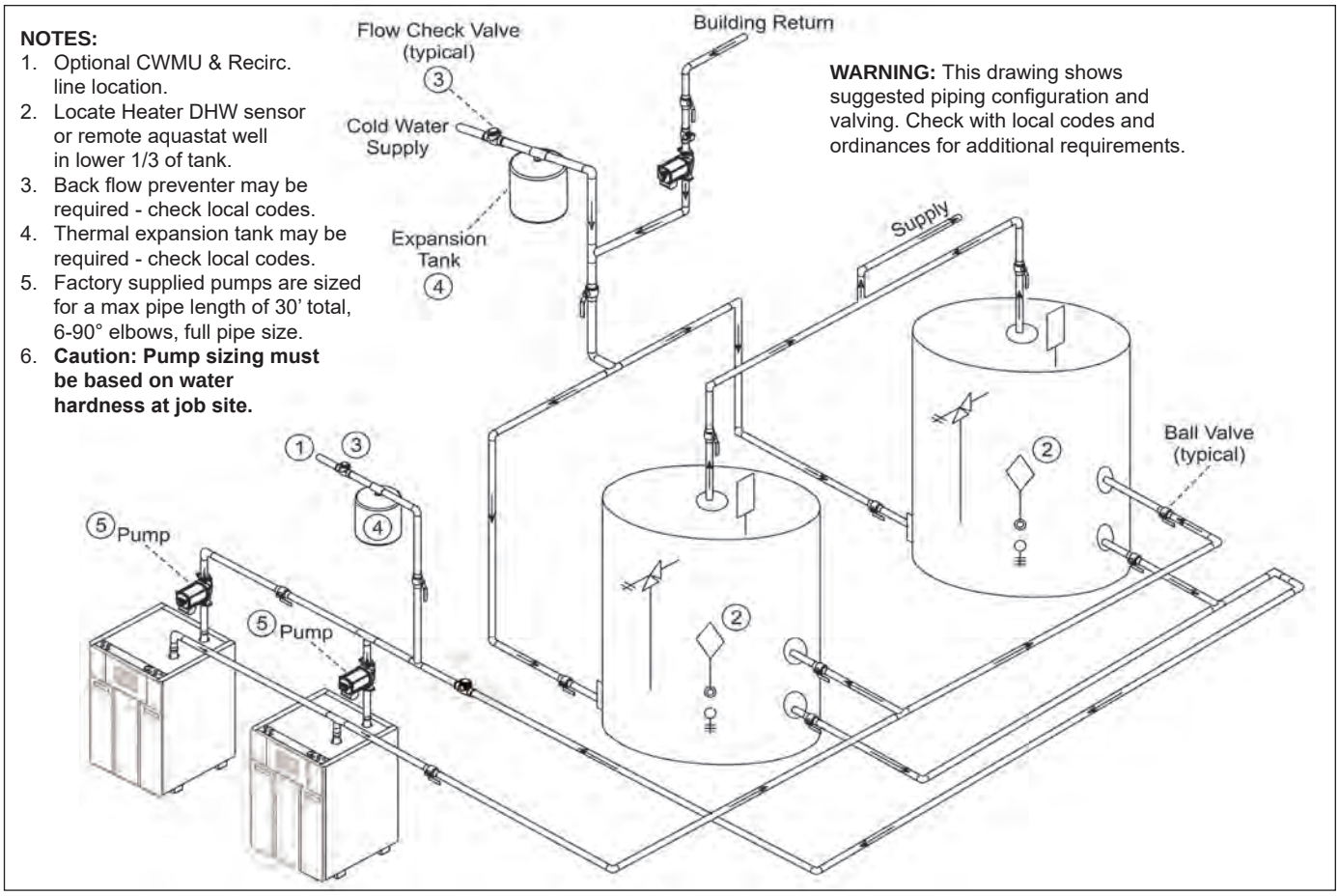

Figure 32. DHW Piping, Two Heaters, Two Vertical Tanks

SECTION 7
INSTALLATION AND WIRING

7.A Installation Warnings

⚠WARNING

The appliance must be electrically grounded in accordance with the requirements of the authority having jurisdiction or, in the absence of such requirements, with the latest edition of the National Electrical Code, ANSI/NFPA 70, in the U.S. and with the latest edition of CSA C22.1 Canadian Electrical Code, Part 1, in Canada. Do not rely on the gas or water piping to ground the metal parts of the boiler. Plastic pipe or dielectric unions may isolate the boiler electrically. Service and maintenance personnel, who work on or around the boiler, may be standing on wet floors and could be electrocuted by an ungrounded boiler. Electrocution can result in severe injury or death.

Single pole switches, including those of safety controls and protective devices, must not be wired in a grounded line.

All electrical connections are made on the terminal blocks that are located inside the control panel. Wiring connections are shown in Figure 34.

All internal electrical components have been prewired. No attempt should be made to connect electrical wires to any other location except the terminal blocks.

⚠ Caution

The supply voltage to the unit must not be disconnected, except for service or isolation, or unless otherwise instructed by procedures outlined in this manual. To signal a call for heat, use the 24V field interlock, as shown in the wiring diagram.

DO NOT MAKE AND BREAK THE LINE VOLTAGE TO THE UNIT TO SIGNAL A CALL FOR HEAT.
A call for heat/ end call for heat MUST be connected to the field interlock terminals. Some components are designed to have constant voltage during normal operation. If the units's supply voltage is toggled as a call for heat signal, premature failure of these components may result.

The unit does not recognize 4mA as a call for heat. If the call for heat is not connected between the field interlock terminals, the unit will remain in low fire when it sees 4mA as a modulating signal. See Section 7.4 for more details.

7.B Main Power Connections

The size of the main power supply should be determined by Table 16 and Table 17 on page 47 These tables indicate the unit's maximum overcurrent protection (MOP) and Minimum Circuit Ampacity (MCA). An overcurrent protection value should be selected based on these numbers.

Please note that all units with Laars supplied pumps 399 and greater, it is necessary to use two circuits. One circuit is to feed the boiler/water heater while the other is for the pump. Again, MCA and MOP are provided for both the unit and Laars provided pump.

7.B.1 Pump Connections and Operation

The unit energizes the boiler pump contacts (dry) when it receives a call for heat. Once the call for heat is satisfied, the pump will remain on for the defined pump overrun time.

The contacts for the system and DHW pump are dry contacts. Appropriate voltage must be supplied to the system and DHW pumps or relay controlling the pumps for proper operation.

All pump connections are located on terminal block 5 (TB5) in the control panel (See Figure 33 on page 46). Any pump using the unit's control relay may not exceed 7.4 amps as governed by the integrated control board. If more current is required, and additional pump contactor must be installed.

Pump contactors are not included, unless the unit was ordered with a pump, and its FLA exceeds 7.4 amps. Included pump contactors are rated for 3hP. Power for the coil may be supplied by TB5. TB5 is a dry contact, and will accomodate low voltage, as well as 120V.

When units are purchased with a pump, the unit and the pump may be powered with a single circuit. See Table 16 and Table 17 on page 47 for electrical data. When using one circuit, review the available MCA and MOP. If the appropriate over-current protection exceeds 18 amps, the circuits should be separated. In this case, additional 120VAC circuits will be required for the pump(s) and potentially for a separate pump contactor.

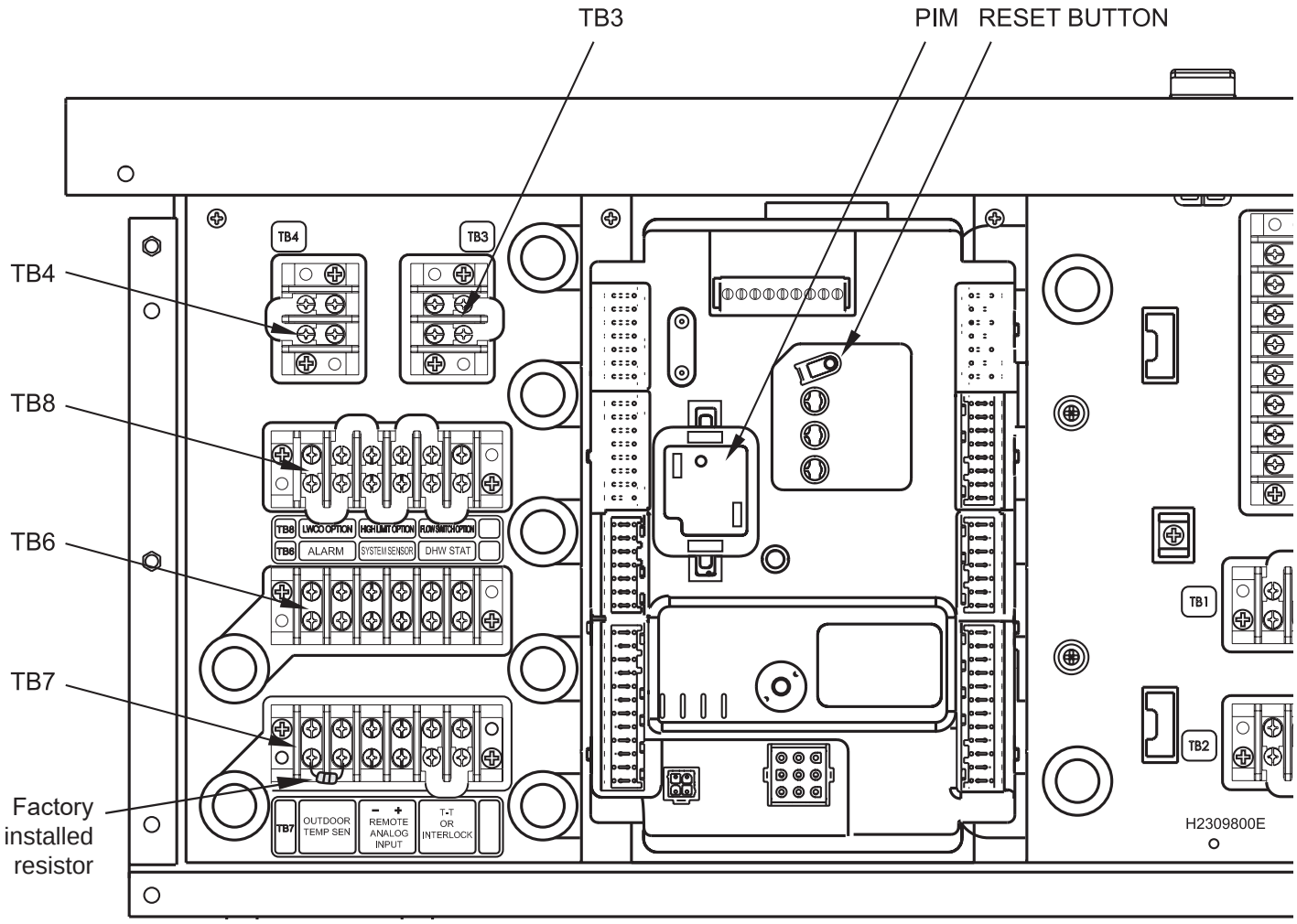

Figure 33. Power & Control Panel Layout

NOTE: All water heating units are shipped from the factory with a resistor (jumper) between the outdoor sensor terminals (terminals 1 and 2 on TB7). If this resistor is removed, the water heater will not be able to heat water above 140°F.

7.B.2 VARI-PRIME

VARI-PRIME® is a variable speed pump controller that is optional equipment for all commercial NeoTherm boilers. Pump speed is controlled to maintain a user-chosen temperature rise between the inlet and outlet of the unit.

VARI-PRIME® will operate the boiler pump at maximum flow during boiler startup to ensure stable operation is reached before introducing variable water flow. This key feature keeps the boiler's combustion and variable speed pump's flow in phase with each other, protecting the heat exchanger from potential low flow conditions.

Contact your manufacturer's representative for more details.

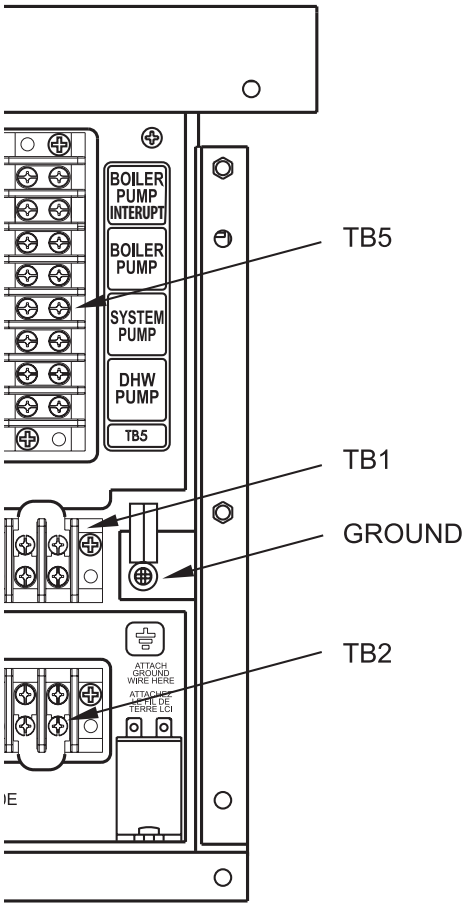

7.C Hydronic Heating Using External Modulation Control

About External Control -

When the unit is used for hydronic heating with external modulation control, a call for heat must be supplied to the “T-T or Interlock” terminal. Once the call is supplied the control starts the Boiler and System pumps and begins the ignition process. Once in Run, the unit monitors the flame signal, call for heat, safeties, and water temperatures. The boiler setpoint is used to limit the maximum water temperature leaving the boiler only. The modulation rate is controlled by a 4-20mA signal supplied by an external control. (This can also be 0-10Vdc using a converter - part number CA006100.) When setting up a system using an external control, take care to set Anti-Short Cycle feature to prevent “hunting “ and possible premature component failure.

7.D Optional Field Connections

Terminal block 8 (TB8) in the control panel is used for the ‘Safety Chain’ and for connecting optional components such as low water cutoffs, flow switches, additional high limits, and other field-supplied devices that must be interlocked with the boiler. These are non-powered dry contacts only. All safeties or end switches must be wired in series by removing the supplied jumpers.

See Figure 33

NOTE: When installing any field-supplied options like Low Water Cutoff, High Limits, or a Flow Switch, always remove the jumper that is factory installed at that location on the TB8 block.

Boiler	Boiler Circuit		Pump Circuit		
Size - MBH	399-500	600-850	150-399	500	600-850
FLA	< 4 amp	5 amp	< 4 amp	6 amp	12 amp
MCA	< 4 amp	6 amp	5 amp	8 amp	15 amp
MOP	5 amp	11 amp	8 amp	14 amp	27 amp

Table 16. Boiler and Pump Electrical Data

Water Heater	Heater Circuit		Pump Circuit		
Size - MBH	150-500	600-850	150	199-500	600-850
FLA	< 4 amp	5 amp	< 4 amp	6 amp	12 amp
MCA	< 4 amp	6 amp	5 amp	8 amp	15 amp
MOP	5 amp	11 amp	8 amp	14 amp	27 amp

If amp draw exceeds 7.4A max, an external pump contactor will be required.
All Boiler, Water Heater and Pump Circuits are 120V.

Table 17. Water Heater and Pump Electrical Data

8.A Lead Lag Connections

These units can be connected in a Lead Lag series up to a total of 8 controllers. One as the Lead control and 7 more as the following controllers. See Figure 34.

For general info and menu set-up for Lead Lag using your Touchscreen, See Section 8, page 69 'About Lead Lag'.

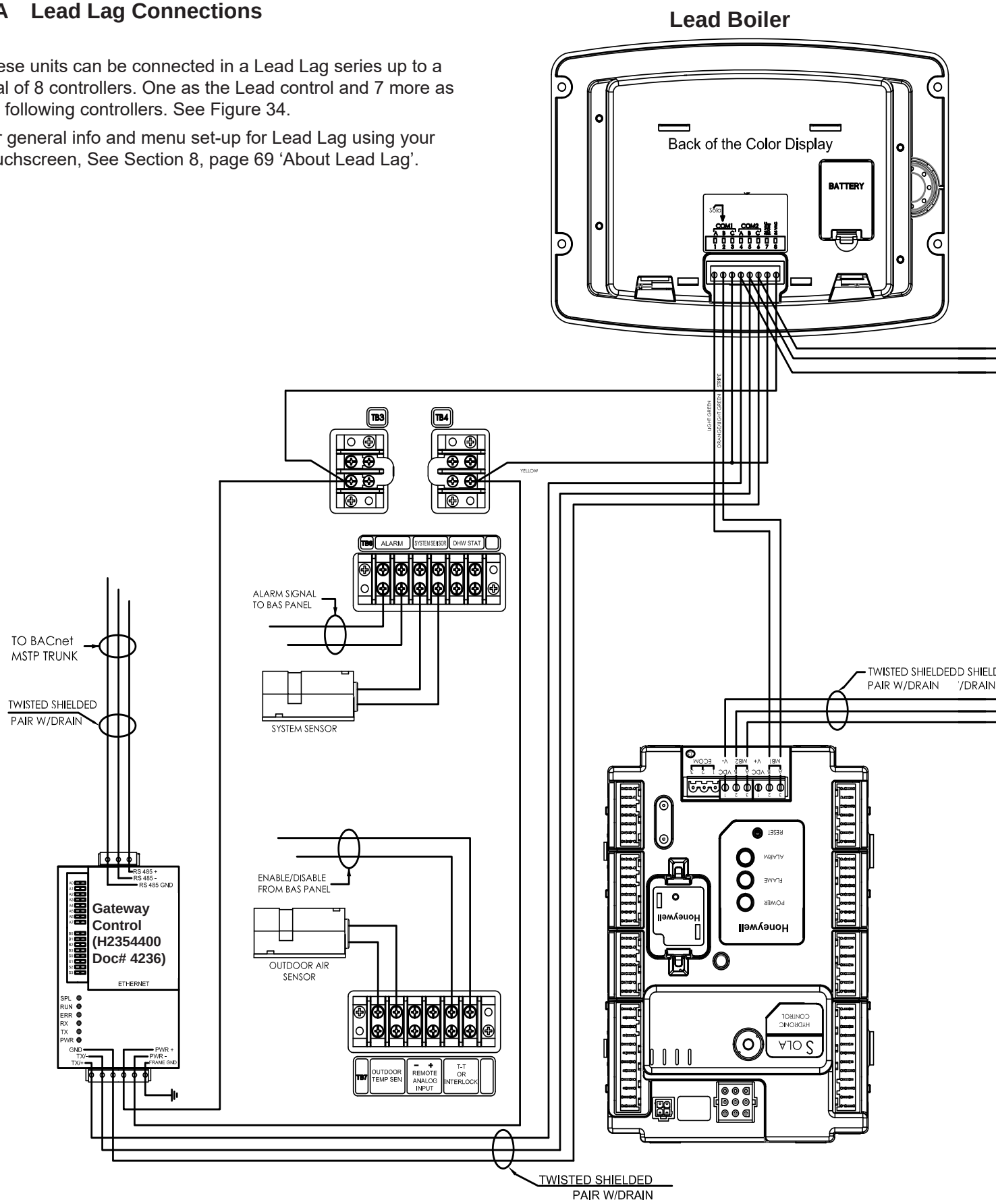

Figure 34. Wiring Diagram for Lead Lag Connections and the Gateway Building Automation System

Following Boiler

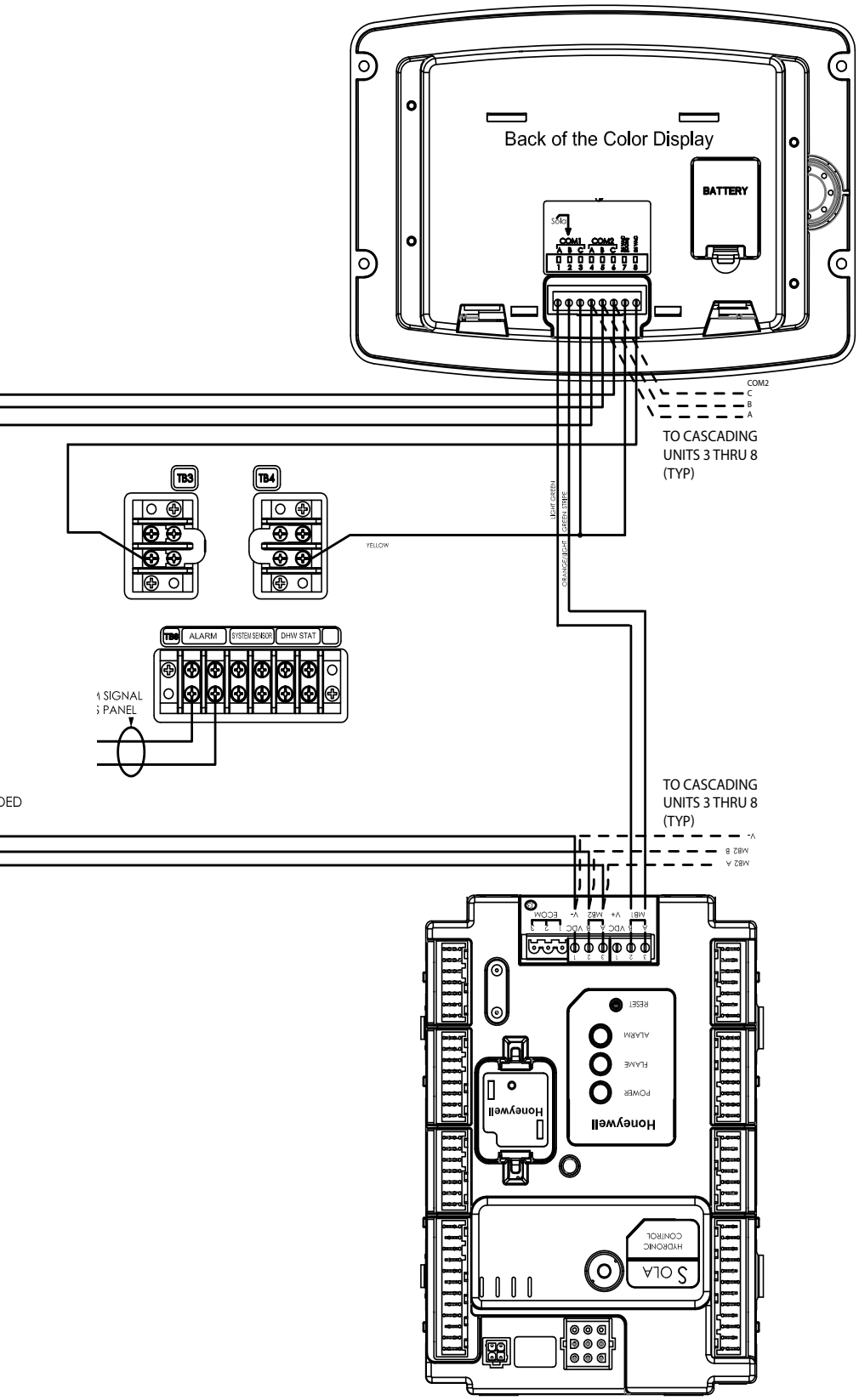

8.B Building Automation System Connections

These units can be controlled and monitored through the included Modbus ports.

Gateway Control (H2354400 Doc# 4236).

Connect the 4-20mA signal from an external control or building automation system to terminal block 7 (TB7) in the control panel. See Figure 33. The connections are labeled Remote Analog Input. When making the connections, follow the polarity designations shown on the label.

Signals from a Building Automation System can be connected to the MB2 Modbus connections on the controller. **See Figure 34.**

For additional information on setting up Modbus and other communication protocols, contact the factory.

8.C System Wiring Diagram

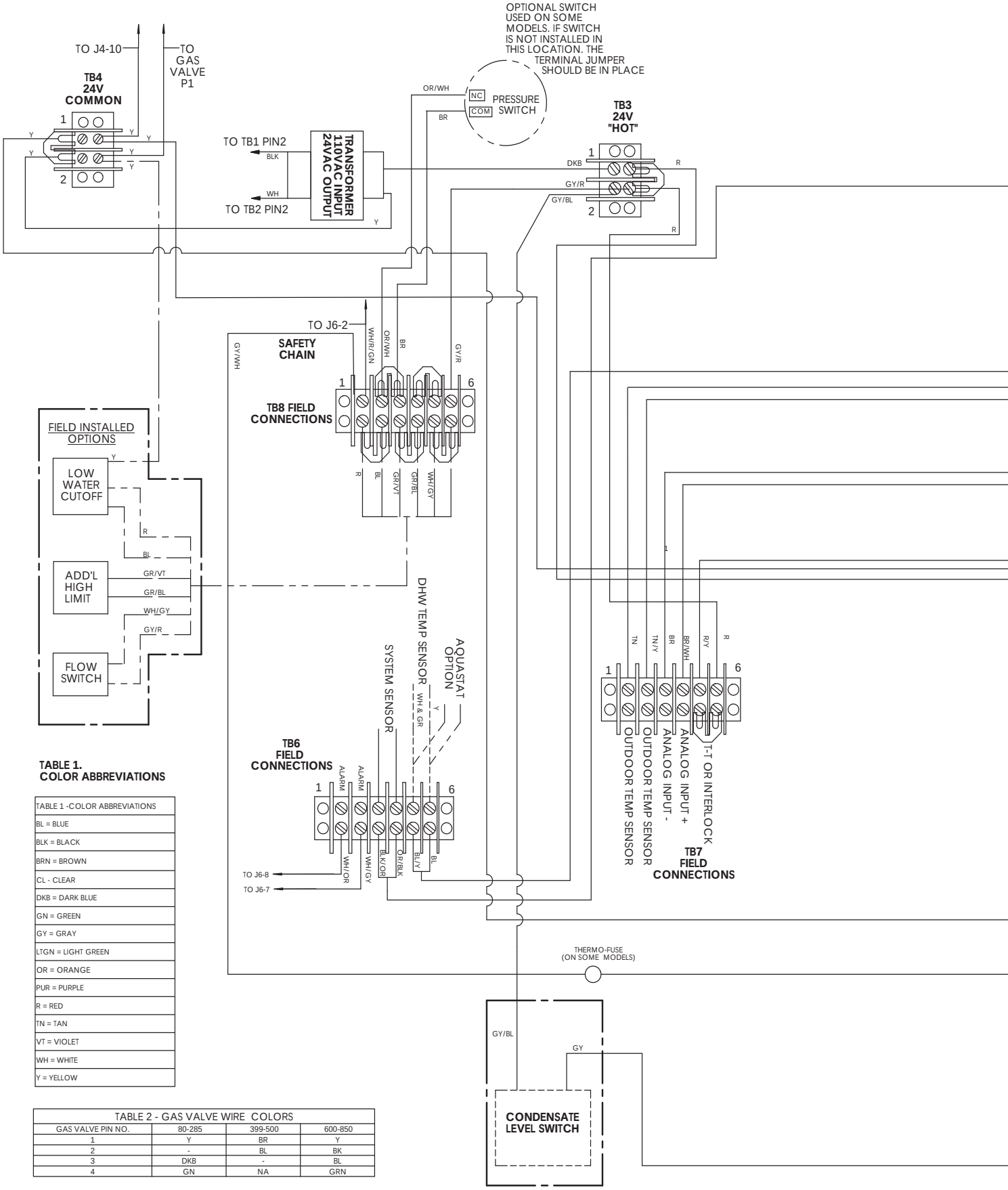

TABLE 1. COLOR ABBREVIATIONS

TABLE 1 -COLOR ABBREVIATIONS
BL = BLUE
BLK = BLACK
BRN = BROWN
CL - CLEAR
DKB = DARK BLUE
GN = GREEN
GY = GRAY
LTGN = LIGHT GREEN
OR = ORANGE
PUR = PURPLE
R = RED
TN = TAN
VT = VIOLET
WH = WHITE
Y = YELLOW

TABLE 2 - GAS VALVE WIRE COLORS

GAS VALVE PIN NO.	80-285	399-500	600-850
1	Y	BR	Y
2	-	BL	BK
3	DKB	-	BL
4	GN	NA	GRN

Figure 35. Wiring Diagram, All Sizes

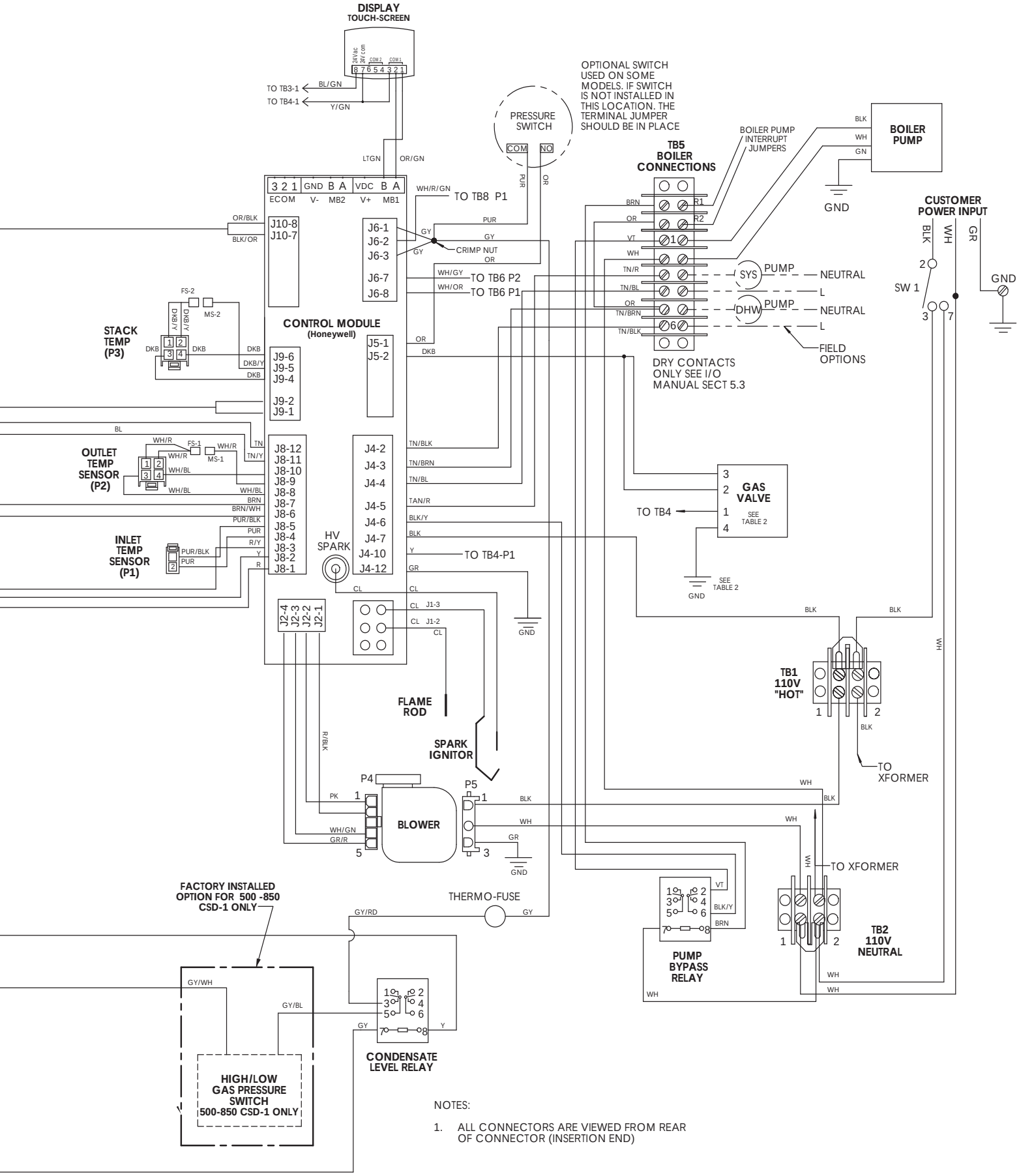

NOTES:

1. ALL CONNECTORS ARE VIEWED FROM REAR OF CONNECTOR (INSERTION END)

8.D Ladder Diagram

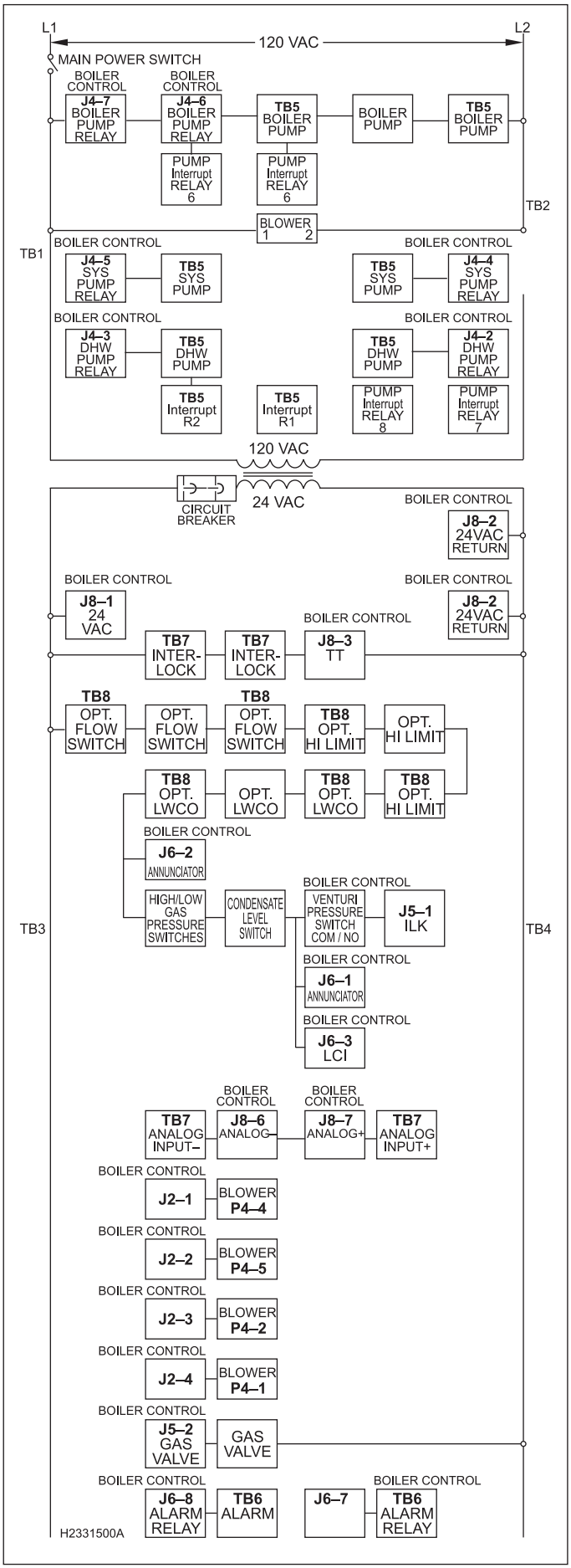

Figure 36. Ladder Diagram

SECTION 9
USING THE TOUCH SCREEN

The Touch Screen on OUTDOOR units is located behind the front panel.

Figure 37. Touch Screen

9.A The Touch Screen

The Touch Screen is located front and center on the units and allows you to navigate into all of the functionality and control that is available to setup and customize your heating and/or hotwater system.

9.B Using the Touch Screen

A screen saver is programmed into the display. Simply touch the screen to wake it up.

While under normal operation, the Touch Screen will automatically present this Home Screen. See Menu 1

Menu 1. Home Screen

The home screen shows a picture of the unit's controller. The color of the controller depends on the status, as shown below.

Color	Status	Control Icon
Blue	Normal operation	
Red	Lockout	
Gray	Standby mode (Burner switch off)	
Gray and crossed out	Communication problem	
Yellow	Hold state. This could be Anti short cycle, fan speed transitions, etc.	

Figure 38. Boiler Status Colors

To check the operation of the appliance, press the large Control Icon on the Home screen. The system will present a Status Summary screen for the appliance:

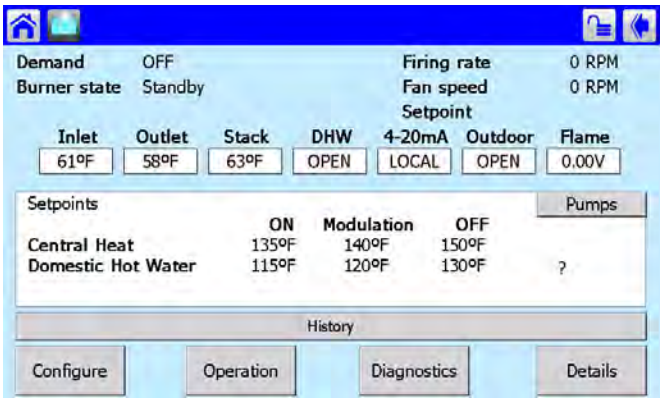

Menu 2. Status Summary

Screen Menu Icons

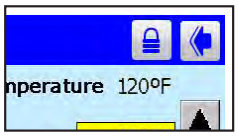

There are several icons at the top of the Touch Screen Menus (and most of the other screens) that will help you move around the system:

Home	Upper left-hand corner	Return to Home page
Camera	Upper left-hand corner	Screen-shot of current menu as a JPG file
Bell	Upper left-hand corner	System in Lockout, Reset required
Padlock	Upper right-hand corner	Locked or Unlocked. See Menu 3
Back	Upper right-hand corner	Return to previous

Sometimes a screen is used to present a list, and often the list is too long to present on a single screen view. To see the rest of the list, pull down on the bar on the right side of the screen, or use the up- and down-arrows.

To make a change, or to get more information about one of the items on the list, press on the line for that item.

9.C Login (required for some parameters)

To change some parameters, a Login (password) is required. The control system includes three levels of password protection:

OEM **Factory Password** **Setup and parameter changes Available only to the factory.**

Login **Installer Password**
Setup and parameter changes made when the system is installed, and some diagnostic and troubleshooting functions.

The installer level password is "Int" (lower case "LNT.") See Menu 3

User **(no password required)**

Non-critical adjustments and functions, including adjusting the Central Heat and Domestic Hot Water setpoints, monitoring the input and output variables, reading parameters from the controller, and reading the error log

(For some special safety-related functions, besides entering the correct password, the system will ask you to go through an additional "verification" process. For more information, see the section on "Configuration.")

When a password is necessary, the system will present the keyboard screen. See Menu 3.

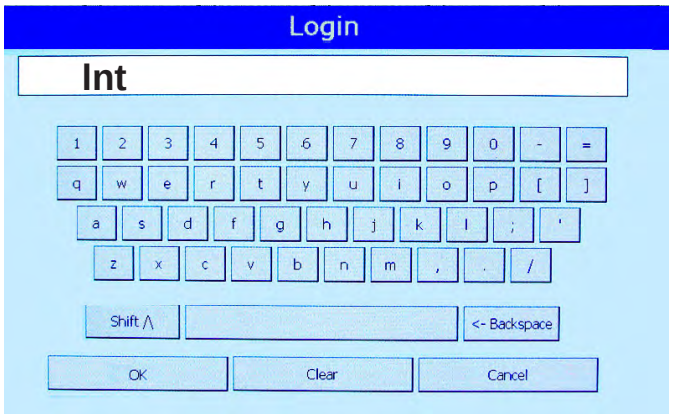

Menu 3. Keyboard Screen

The passwords used by this system are "case sensitive" – it matters whether a letter in the password is capitalized or not. Pressing the Shift key toggles between capital and lower case letters.

"BS" stands for "Back Space," and also works as a Delete key.

Anyone can *view* all of the parameters. However, to *change* most of the parameters, you will need a password.

At the bottom of the screen, the system indicates that you need to enter a password.

Menu 4. Login Required

The screen used to Login is similar to the Keyboard screen.

It may be difficult for some operators to press the keys on this screen. In this case, use the back of a plastic pen, or a stylus, or a pencil eraser. (Do not use sharp metal tools – these may damage the plastic surface of the screen.)

Each time you press a key, the system will respond with a beep. If you are entering a password, an asterisk (*) will appear for each character you enter. The beeps

and asterisks will help you enter the correct number of characters for your password.

When changing a numerical value, the system presents a numerical entry screen, as shown below.

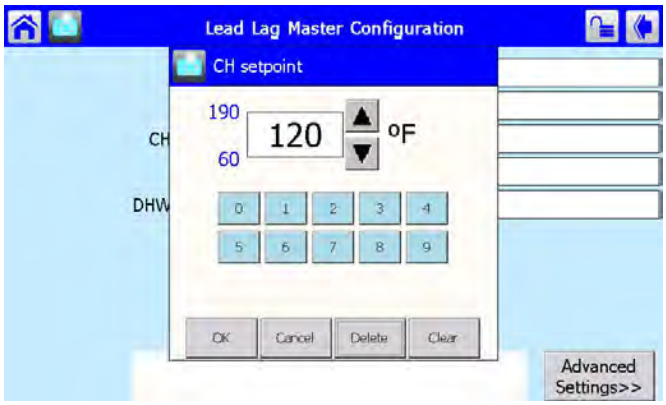

Menu 5. Numeric Entry Screen

9.D Verification Process for Safety-Related Parameters

The verification process allows the user to confirm that all the changes made are correct and that there have not been any inadvertent changes made.

1. When you start to change a parameter that is related to safety, the system will present a warning which looks like this:

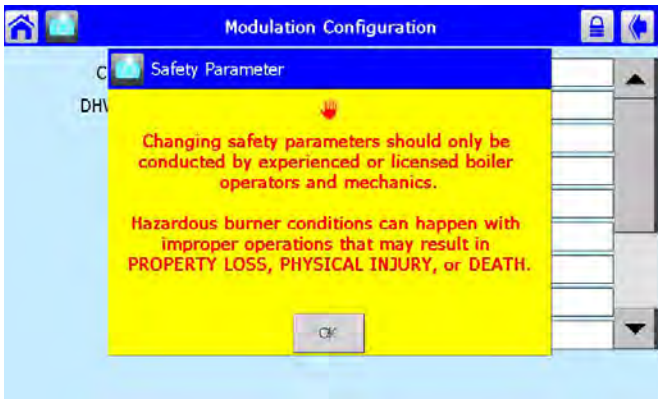

Menu 6. Parameter Safety Warning

> **⚠WARNING**
> Changing safety parameters should only be conducted by experienced, licensed boiler operators and mechanics. Hazardous burner conditions can happen with improper operations that may result in PROPERTY LOSS, PHYSICAL INJURY, or DEATH.

Press OK to continue. The system will ask you to login before you make a change. (For more information on logging in, see Section 8.2.)

2. If you make a change in any group that could affect the safe operation of the unit, the control system will ask you to “verify” the change before it is accepted.

3. Once all parameters have been changed, return to the configure menu. In the lower right hand corner of the screen you will see ‘VERIFY’ Press VERIFY, then press BEGIN to start verification.

Notes –

- Once you change one of these safety-related parameters, you ***must*** finish the verification process for the group that includes the parameter, ***or the control system will not let the boiler operate***. You can wait to do the verification until you have changed parameters in other groups, but before you return the boiler to service, you must complete the verification process for all groups that have been changed.
- At the end of the verification process, you must press the Reset button on the front of the controller. See Figure 39. You have to do this within 30 seconds, or the verification will be cancelled. To make it easy to reach the Reset button, open the door on the front of the boiler and slide out the control panel ***before*** beginning the verification.

Figure 39. Reset Button on Controller

4. The system will present a listing for each group of parameters that need verification
   See Menu 7.

Menu 7. Safety Parameter Confirmation

5. For each group, check the list carefully. Press Yes if all of the parameters in the group have been entered correctly. For each group, you are given 30 seconds to select Yes/No.
   A count-down timer is shown at the bottom of the screen.

   If you made changes in other safety-related groups, verify the entries in those groups in the same way. Do this until the following screen shows

Menu 8. Safety Parameter Reset

6. When the process is complete, the system will tell you to reset the control system. The Reset button is located on the front of the controller. You must press the Reset button within 30 seconds, or the verification will be cancelled. A count-down timer is shown at the bottom of the screen.

9.E Checking Individual Parameters

1. From the 'Home' screen (Menu 9), press the icon for the controller.

Menu 9. 'Home' screen

2. The Status Summary page for the controller will appear. This shows the current operating condition of the controller, and also shows some of the configuration settings.
   See Menu 10

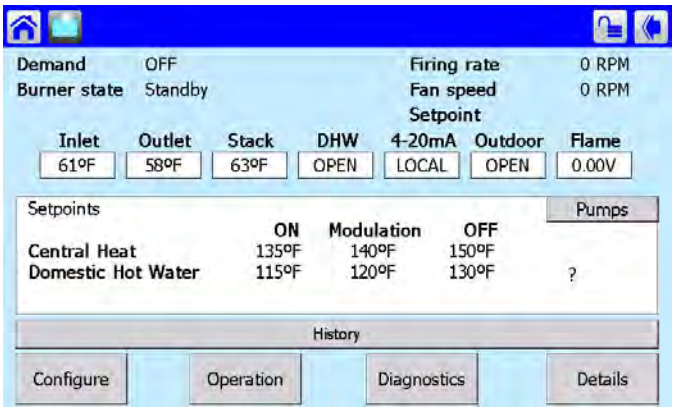

Menu 10. Status Summary Screen

Notice the four buttons at the bottom of each Status Summary screen:

- Configure – Allows an installer to change some of the setup parameters used by the system. A password may be required.
- Operation – Used to adjust the setpoints, change the fan speed, turn a burner on or off, or turn the pumps on or off.
- Diagnostics – Allows you to run diagnostic tests, or check the inputs and outputs used by the system.
- Details – Allows you to check the status of all of the setup parameters on the control system.

9.F Setting the Date and Time on the System Display

The display includes an internal clock, which keeps track of the date and time. This setting is important, because log entries for Lockouts and Alerts include time listings. If the Date and Time setting for the boiler is not correct, the listings in the Lockout and Alert logs will be incorrect.

To set the clock:

1. Start at the 'Home' screen.

Menu 11. 'Home' screen

2. Press the Setup button on the lower right corner of the screen. The system will present the Setup screen.

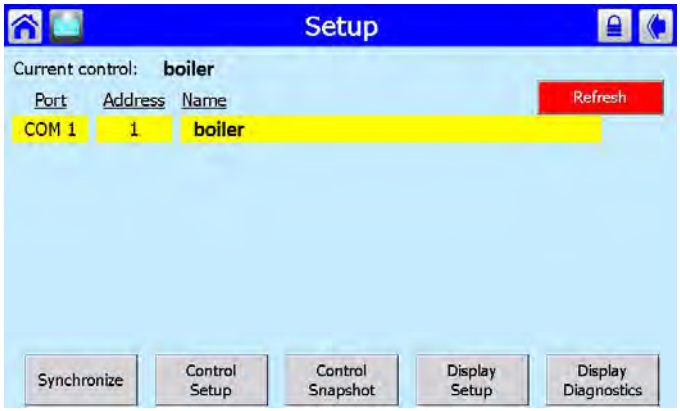

Menu 12. Setup Screen

3. Press the Display Setup button at the bottom of the screen.

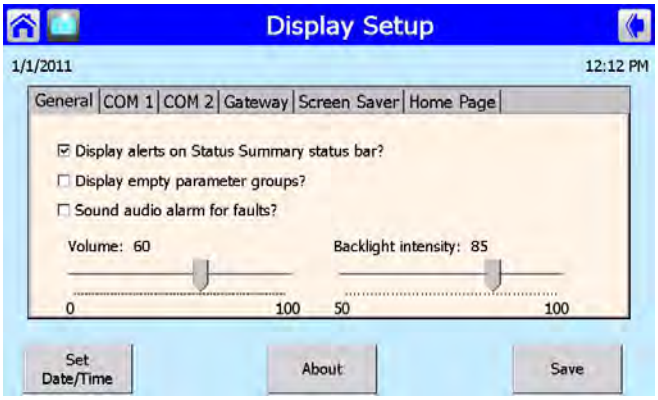

Menu 13. Display Setup Screen

4. Press 'Set Date/Time' button.

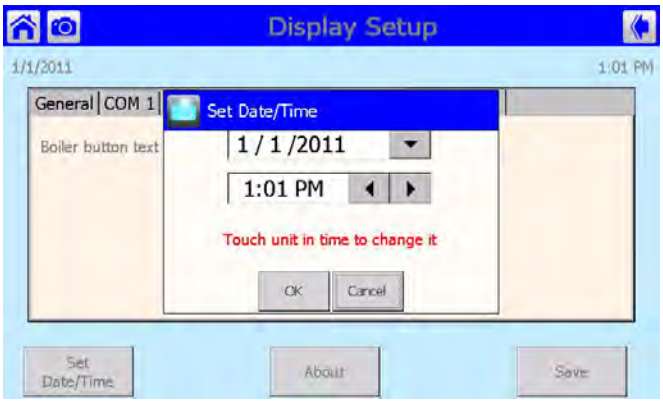

Menu 14. Date and Time

5. Use the arrows to change the date and time, and then press the OK button.

Battery

The display has a removable battery (CR2032) to store time, date, lockout, and alerts in the event of a power failure. It has an expected lifetime of 10 years. The battery can be accessed from the back of the Touchscreen display.

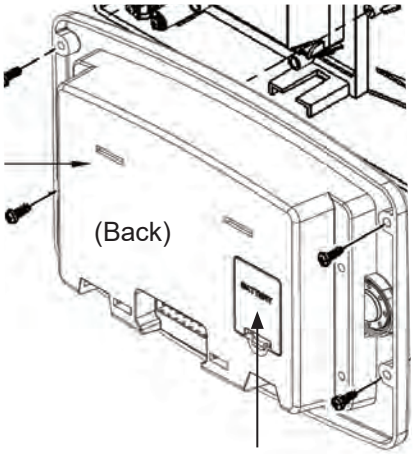

Battery (CR2032)

9.G The Configuration Menu

is the gateway to the parameters that the factory, the installer, or the end user will need in order to setup, service, maintain, or adjust the unit.

There are eighteen (18) items in the Configuration Menu that can be viewed. Please Review Menu 17.

Each of these items will have Sub-Menus in which you can make parameter adjustments and configurations.

1. From the Home Page screen (Menu 15), press the icon for the controller.

Menu 15. Home Screen

2. The Status Summary page for that controller will appear. See Menu 16

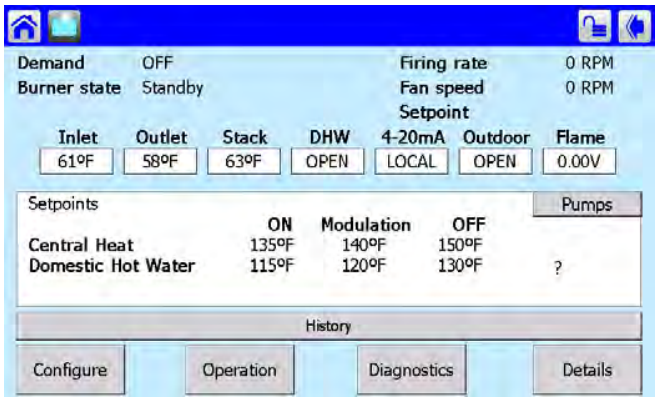

Menu 16. Status Summary Screen

3. Press the Configure button to start a configuration session for the controller.

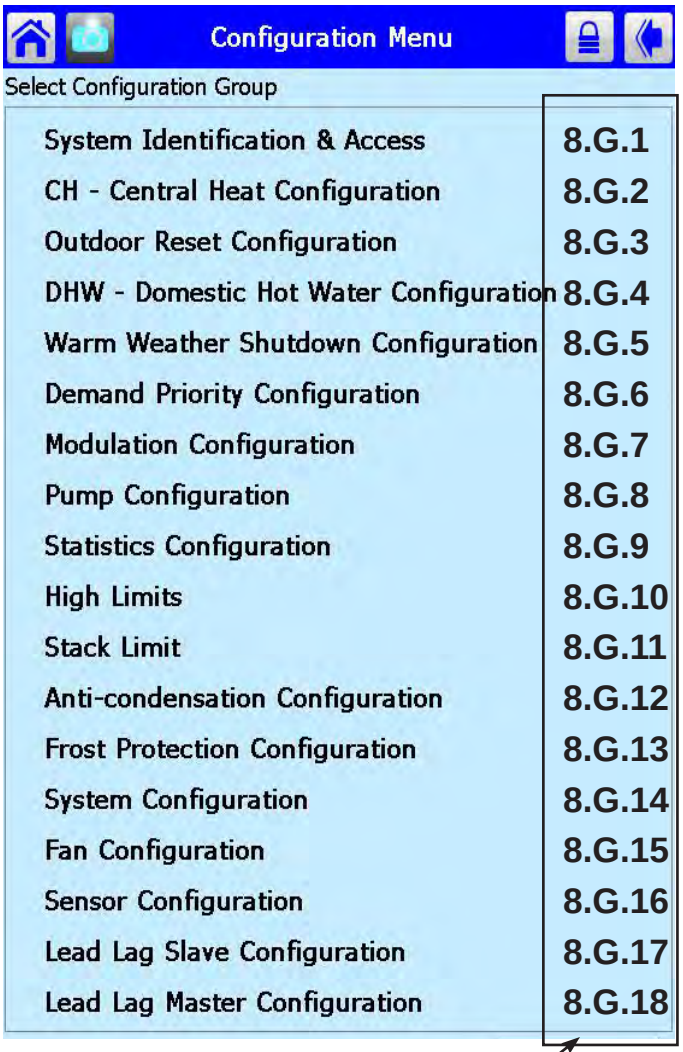

Menu 17. The Configuration Menu

From the Configuration Menu there are 18 Configuration Sub-Menus. Use the scroll tab on the right to view them all.

The next section of this manual will show the installer these sub-menus and the basics on how to setup/adjust these configurations.

The Configuration Sub-Menus (ALL 18)

8.G. *1 — 18*

Some of these configurations will require a Login first. See Menu 3 on page 54

When using the unit for hydronic heating, a call for heat must be supplied to the "T-T" terminals found on TB7 labeled "T-T or Interlock". Once a call for heat is established, the control will start the appropriate (selected) pumps, and begin the ignition process.

9.G.1 System Identification & Access

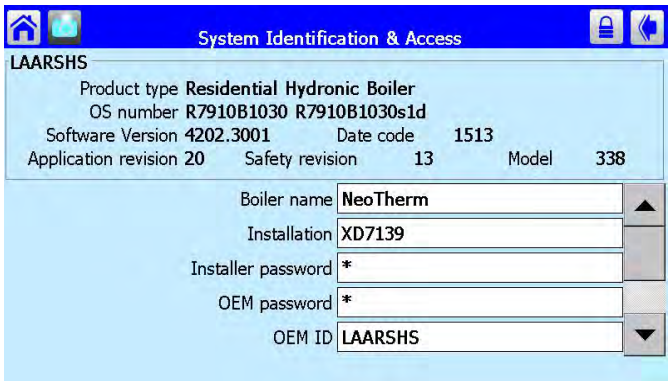

This sub-menu will display information regarding software, date codes, model numbers and program name, as well as giving the installer access to re-name the boiler and to change the modbus addresses for lead lag operation. Press the back arrow on the top right corner of the screen to return to the 'Configuration Menu'.

9.G.2 Heat Configuration

9.G.2.a CH - Central Heat Configuration

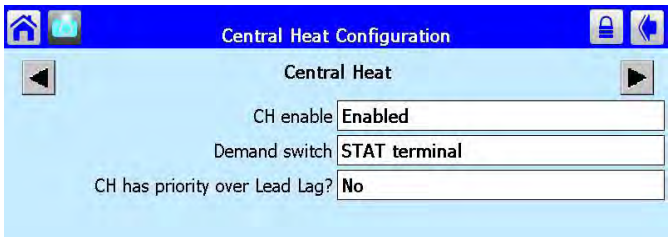

Make sure that CH is Enabled and then press one of the black arrows (either side) to get to the Set-Point screen.

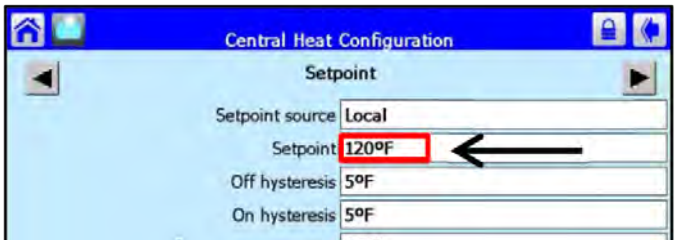

Press on the 'Setpoint' box to make adjustments to setpoint, and modulation for a single boiler CH demand.

9.G.2.b Setting Up 4-20 mA Setpoint

The Central Heat Configuration Menu ( ) has three sub-menus and each of them can be reached by scrolling left or right thru the arrows on the left and right. See Menu 18. The three sub-menus are 'Central Heat', 'Setpoint', and 'Modulation'.

To set up 4-20 mA Setpoint, you will need to go into the 'Setpoint' sub-menu first and change the Setpoint source from Local to S2 (J8-6) 4-20 mA. Then go to the 'Modulation' sub-menu and set the Modulation source to Local. Both Setpoint and Modulation cannot have their source set as Local.

From the Central Heat Configuration Sub-Menu, choose either the left or right arrow.

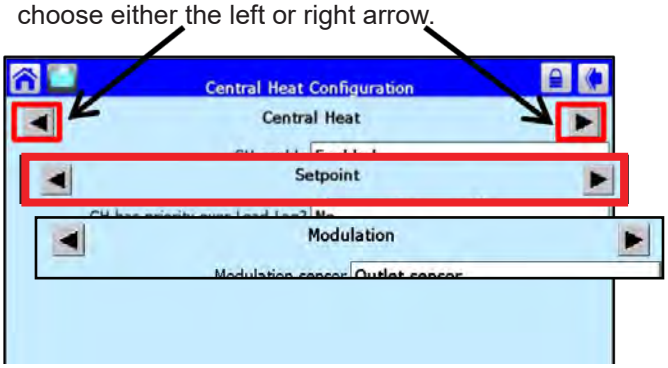

Menu 18. The Setpoint submenu

until you are on the 'Setpoint' sub-menu, then Click onto 'Local'.

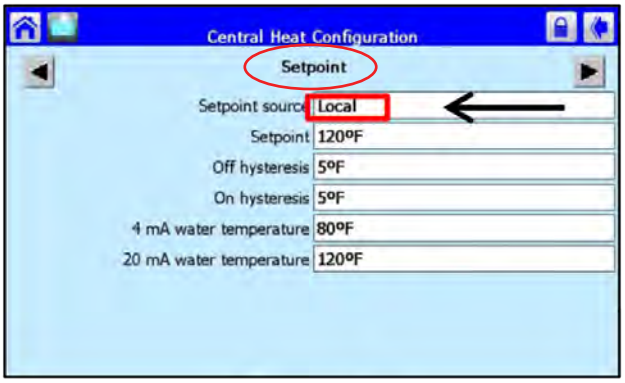

Click onto the down arrow to see further options.

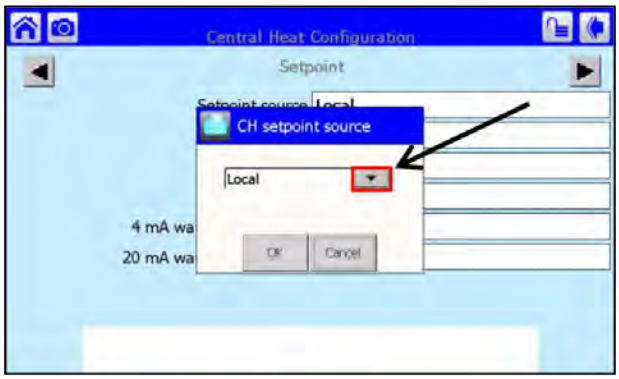

Choose S2 (J8-6) 4-20 mA, then press OK

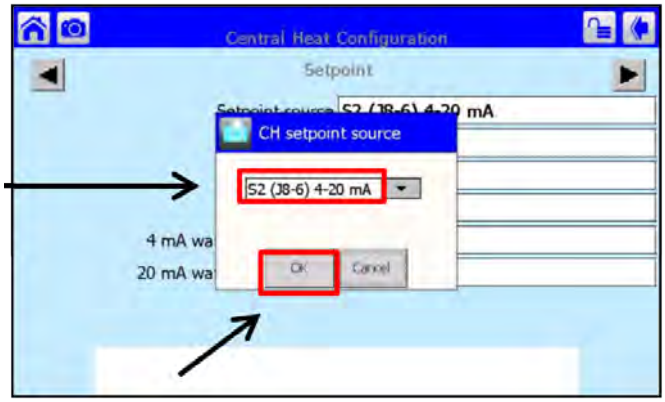

Then scroll over to the Modulation sub-menu and click onto Modulation rate source.

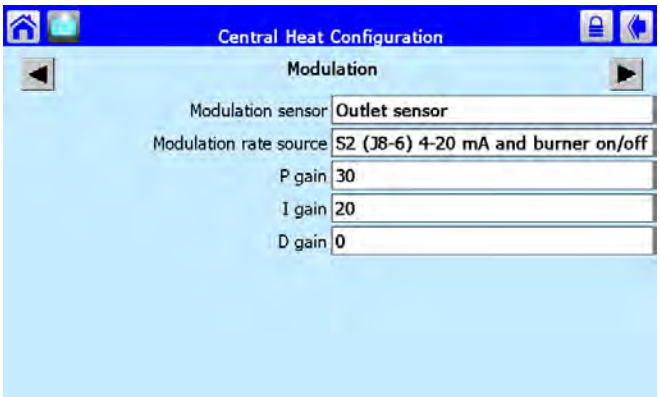

Select Local, then press OK.

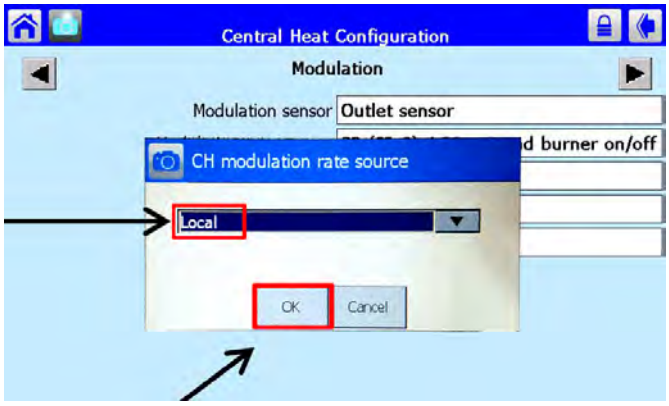

9.G.3 Outdoor Reset Configuration

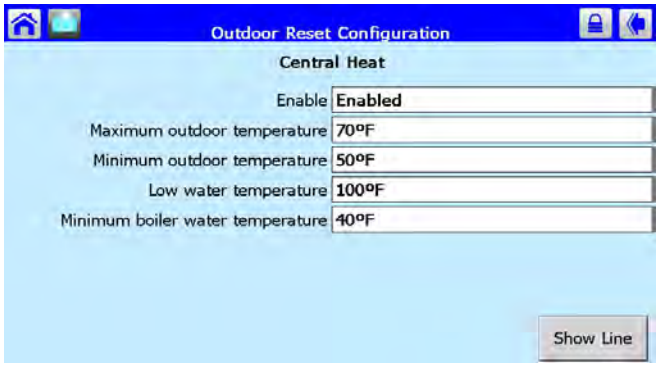

At this sub-menu, confirm that Central Heat is Enabled. Next, press onto the Maximum Outdoor Temperature, Minimum Outdoor Temperature, and Low Water Temperature to get to each and adjusting their setpoints in those sub-menus.

9.G.4 DHW - Domestic Hot Water Config

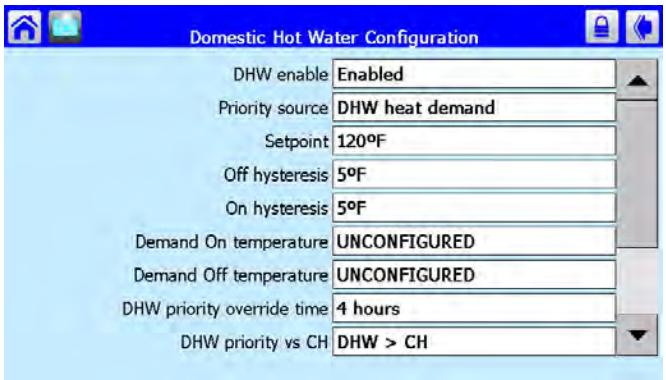

DHW - Domestic Hot Water is used to configure the DHW temperature parameters for water heaters (Heater) and for indirect water heaters that are used with boiler (Boiler) systems.
Press on the Setpoint box to get to the adjustment sub-menu. Then adjust it up or down to your desired DHW setpoint.

9.G.5 Warm Weather Shutdown Config

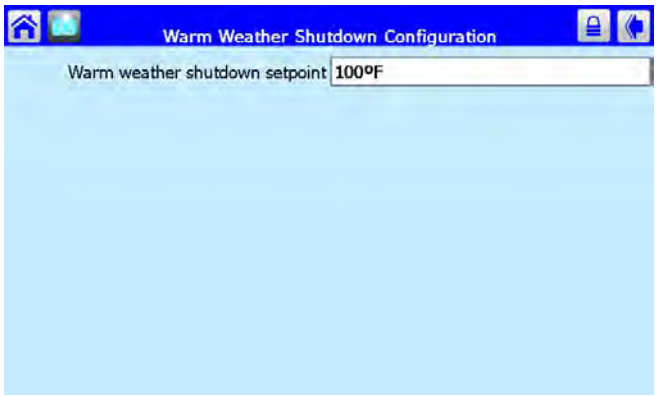

From this sub-menu you will be able to enable/disable the Warm Weather Shutdown feature and adjust the set point.

9.G.6 Demand Priority Configuration

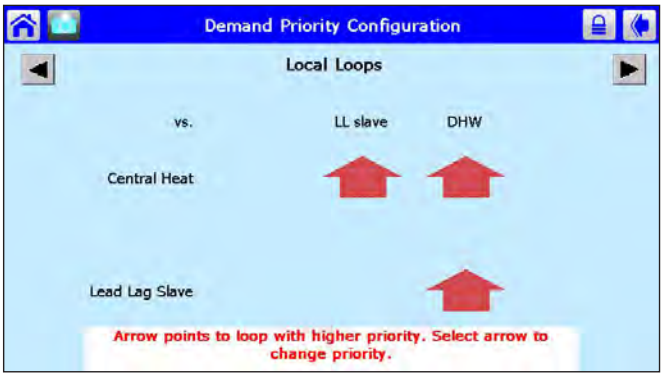

From the Demand Priority Configuration, the installer can adjust the priority of the different demand types.

Central Heat, Lead Lag, Domestic Hot Water

The control uses arrows as indicators to point to the loop with higher priority.

9.G.7 Modulation Configuration

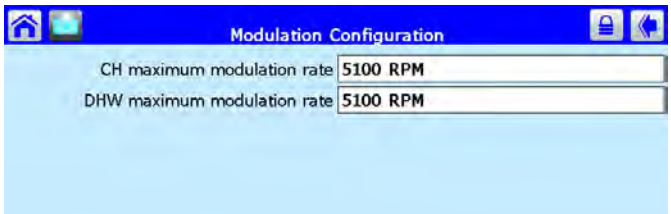

From this sub-menu the installer has the ability to adjust the range of modulation for the CH, and DHW demands. The unit is designed with a 5:1 turn down ratio. Any change to the minimum and maximum modulation rates will affect the overall ratio of the boiler. The installer level password will allow changes to these parameters. Consult the factory if an adjustment is needed to any of these parameters.

9.G.8 Pump Connections

The controller in the unitenergizes the pump contacts when it receives a call for heat. Once the call for heat is satisfied, the pump will remain on for the defined pump overrun time.

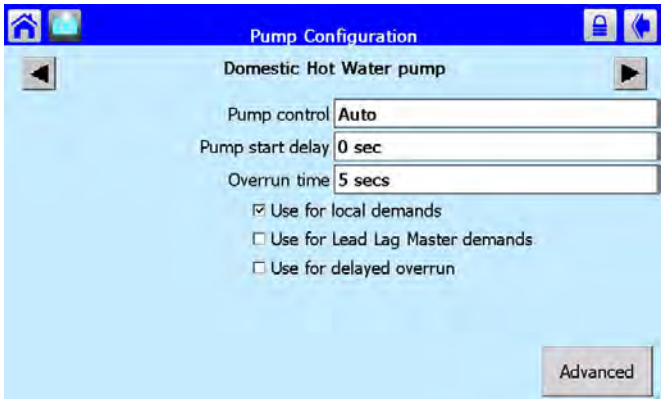

The Boiler Pump terminals (TB5 - max 7.4 FLA) are fed by 120V (violet wire) internally from the main power feed. The System and DHW contacts are dry contacts. Appropriate voltage must be supplied to the System and DHW pumps for proper operation.

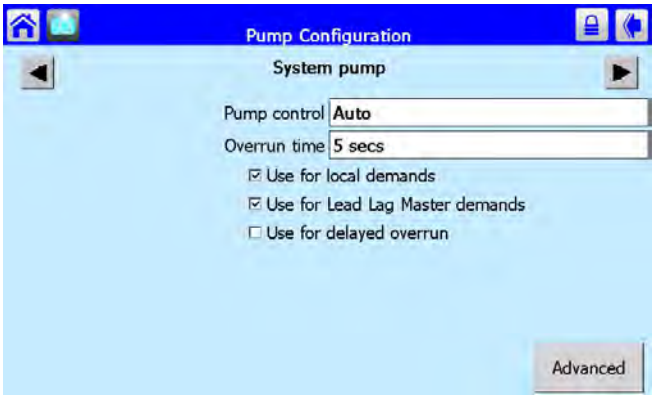

The System pump connections are located on terminal block 5 (TB5) in the control panel. The System pump contacts are rated for 120Vac, 7.4 Amps. To use the contacts, power must be supplied on one terminal with the other terminal wired to the pump or a relay controlling the pump.

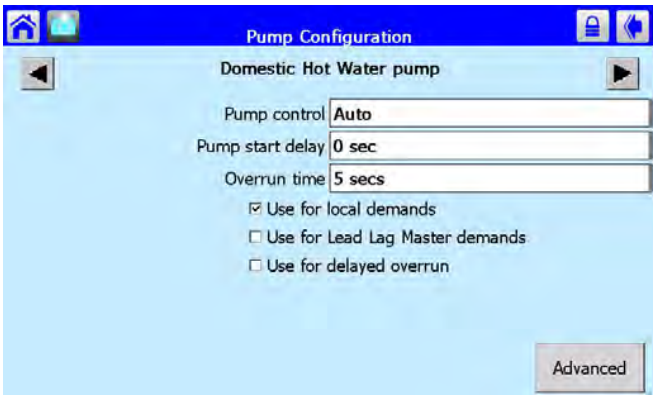

The DHW pump connections are located on terminal block 5 (TB5) in the control panel and are rated for 120Vac, 7.4 Amps. To use the contacts, power must be supplied on one terminal, and the other terminal wired to the pump or a relay controlling the pump. Additional 120VAC circuits may be required for the pumps.

9.G.9 Statistics Configuration

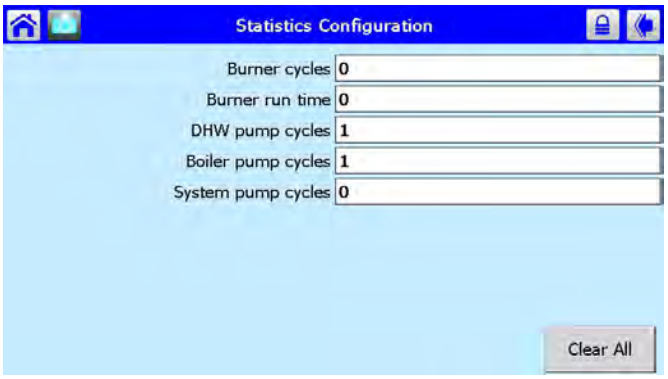

The statistics configuration sub-menu allows the installer to view Burner Cycles, Burner Run Time, DHW Pump Cycles, Boiler Pump Cycles, and System Pump Cycles.
This sub-menu is 'Read-Only'

9.G.10 High Limits

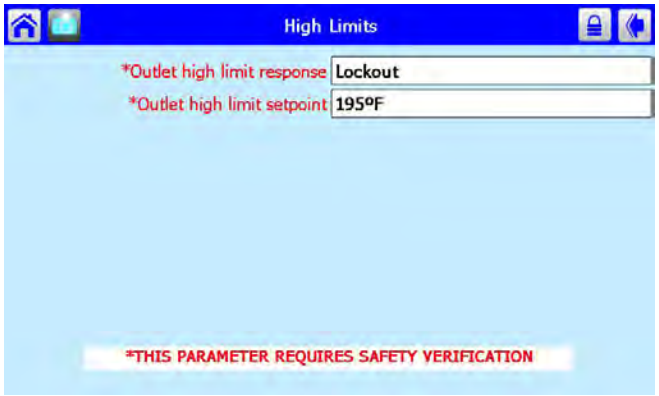

The outlet High limit can be adjusted using the installer password. After a change is made, the control will lockout and require a Safety Verification (see Section 8.3 for more details on Safety Verification).

9.G.11 Stack Limits

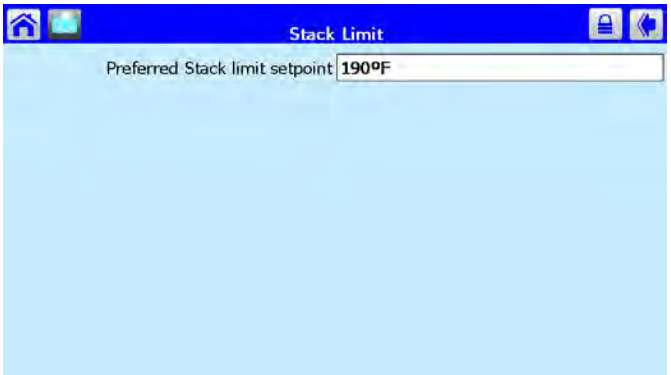

9.G.12 Anti-Condensation Configuration

Anti-condensation (frost protection) is enabled/disabled on this screen

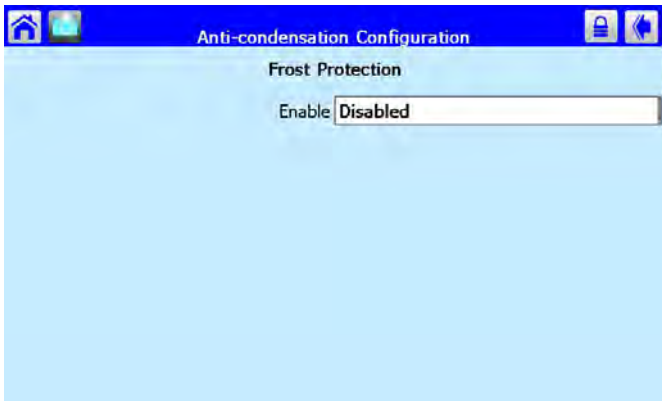

9.G.13 Frost Protection

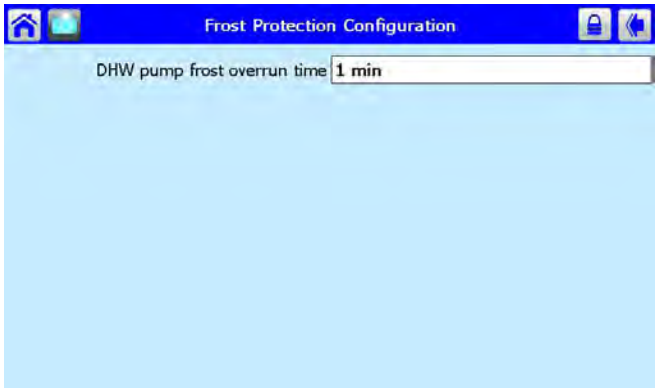

Frost protection will assist in keeping the unit from freezing when the unit is not able to fire, but is still able to run the pumps. The frost overrun time can be changed on this screen.

9.G.14 System Configuration

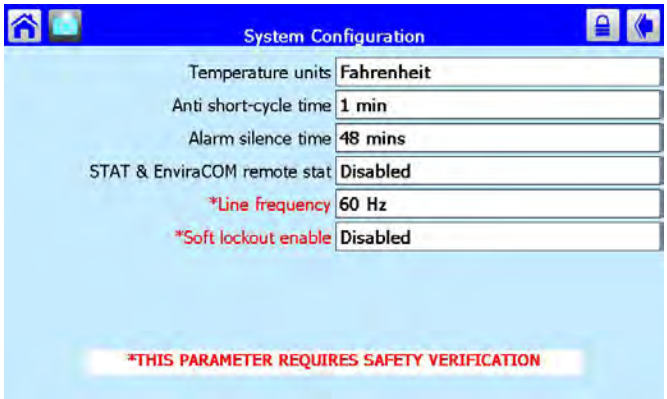

The installer can set the control to display temperature units in °F or °C, can adjust the anti short -cycle time, the low fire cutoff time, burner off inhibit time, and can set the time allowed for an alarm to sound before being silenced.

9.G.15 Fan Configuration

To increase/decrease the speed at which the fan control loop reacts to a decrease in fan speed, adjust the Fan gain down parameter. Similarly, to increase/decrease the speed at which the fan control loop reacts to an increase in fan speed, adjust the Fan gain up parameter. The minimum duty cycle is a view only parameter. To set a fixed RPM at which the fan should ramp up or down, adjust the Speed up ramp or Speed down ramp respectively.

9.G.16 Sensor Configuration

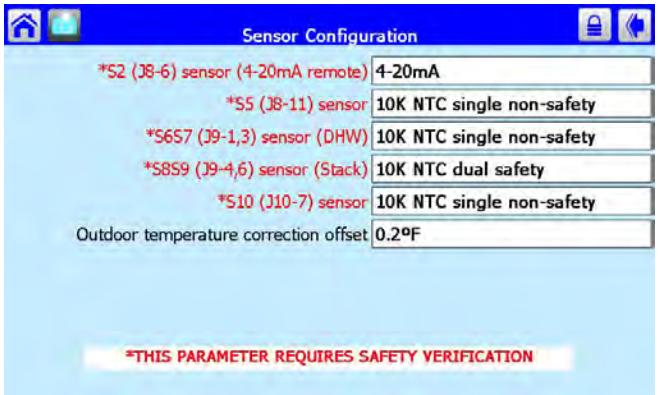

The outdoor temperature can be read from the outdoor sensor that is shipped with the unit.

9.G.17 Lead Lag Follower Configuration

Note: The system sensor and outdoor sensor will need to be wired to the Master boiler only.
The input from these sensors is used by the Master control to control the modulation rate of all the operating boilers it is connected to. See the manual for sensor and cascade wiring.

When a boiler is operating as part of a Lead Lag system, it does not use the normal “CH set point” – it uses the “Lead Lag CH set point” on the Master control.

It is STRONGLY recommended to start each boiler to complete combustion set up and perform all safety checks before setting up Lead Lag cascade. See ‘Combustion Setup’ in this manual.

Before tapping on Lead Lag Follower Configuration in the Configuration Menu, you must first go to System Identification

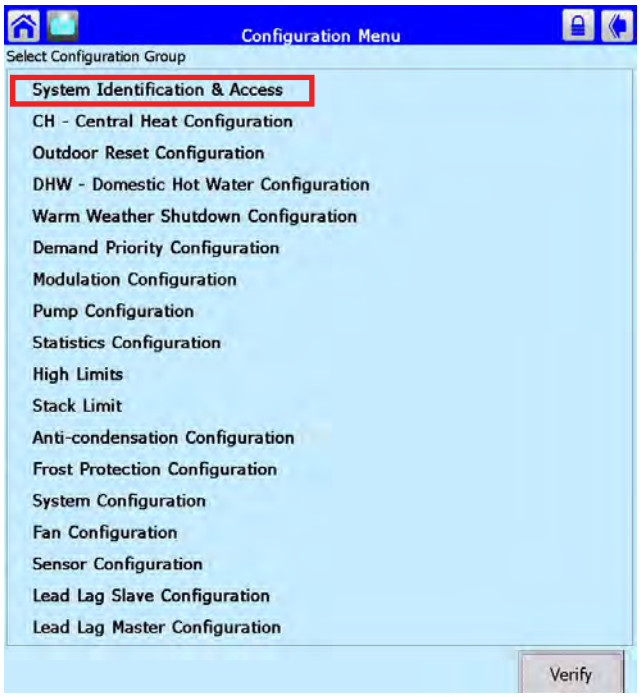

The Configuration Menu

At the top select ‘System Identification & Access’

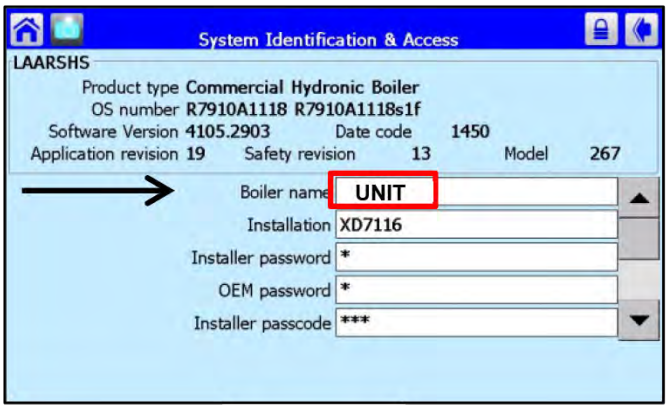

Select Boiler Name

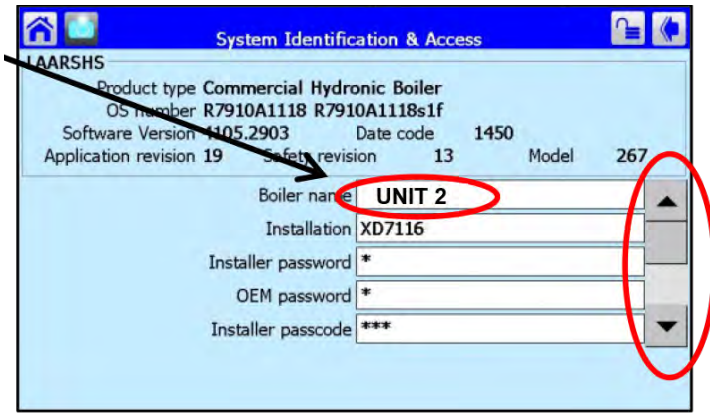

Type in the correct name for this following boiler, then scroll down.

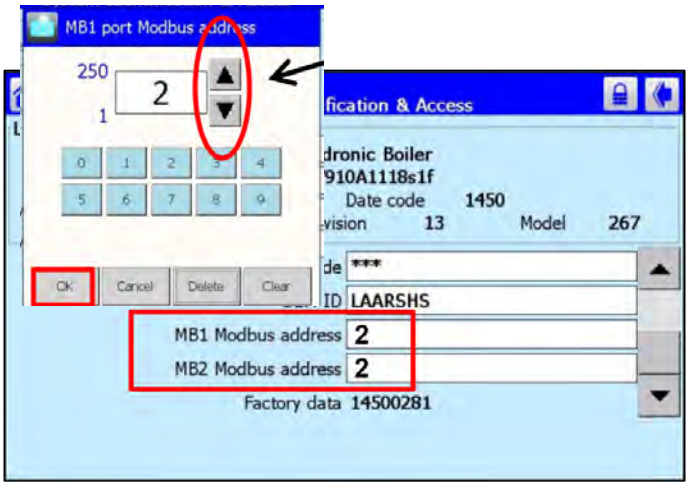

Type in the Modbus address for this following boiler

8.G.17 Lead Lag Follower Config (continued)

Return to the configuration menu by pressing the Back arrow. Next, you will need to confirm that the master configuration is **Disabled.**

In the configuration menu, scroll down to the bottom and press onto Lead Lag Master Configuration.

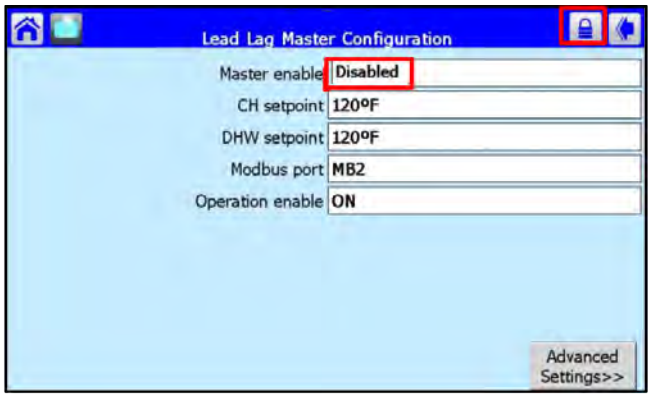

Make sure that Master enable is 'Disabled' then press the Back arrow to return to the configuration menu.

Then you will need to confirm that the Follower configuration is **Enabled**.

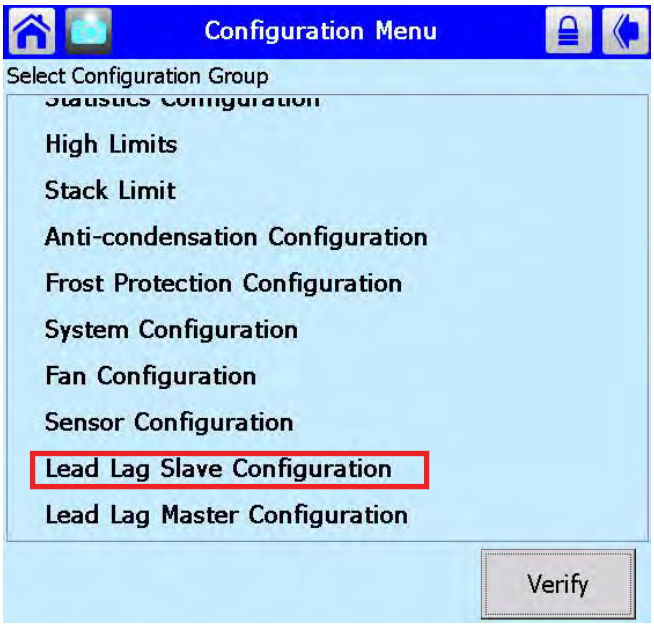

Press 'Lead Lag Save Configuration

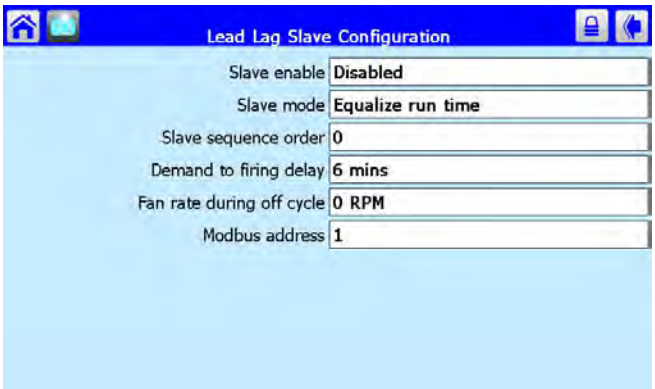

Press Disabled

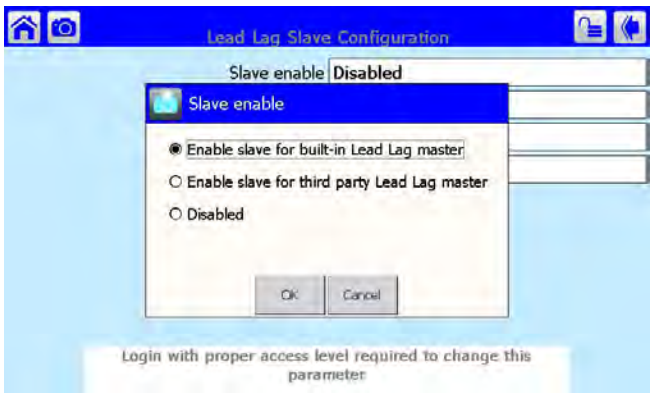

Select 'Enable Follower for built-in Lead Lag Leader' Then select OK

Repeat these steps on all follower units.

9.G.18 Lead Lag Leader Configuration

Wiring Connections for Lead Lag -

The controller in each boiler includes two wiring terminals for the Modbus system, labeled “MB1” and “MB2.” MB1 has the wiring connections to the User Interface display on each unit, and MB2 is used to communicate with the other boilers in the Lead Lag system.

For wiring connections to Lead Lag, see Figure 34 on page 48

To reach the controller, open the cabinet of the unit. The front panels on the indoor model pop off when pulled forward. The outdoor model has two latches that must be released on the sides before pulling the panel forward and then up and off.

The wiring from the controller on the first boiler runs to the controller on the next boiler. Use 22 AWG or thicker shielded twisted-pair wire with drain. Two twisted pairs or three conductors are needed. Wire A on MB2 of Boiler 1 must be connected to A on MB2 of Boiler 2, wire B on Boiler 1 goes to B on Boiler 2, and wire C on Boiler 1 goes to C on Boiler 2. Repeat this wiring for any other boilers in the system. Connect all of the drain wires and ground the drain wire on one end of the assembly only.

Note: The system sensor and outdoor sensor will need to be wired to the Master boiler only.
The input from these sensors is used by the Master control to control the modulation rate of all of the operating boilers it is connected to. See the manual for sensor and cascade wiring.

When a boiler is operating as part of a Lead Lag system, it does not use the normal “CH set point” – it uses the “Lead Lag CH set point” on the Master control.

It is STRONGLY recommended to start each boiler to complete combustion set up (See page 72) and perform all safety checks before setting up Lead Lag cascade.

The Configuration Menu

Select ‘Lead Lag Master Configuration’

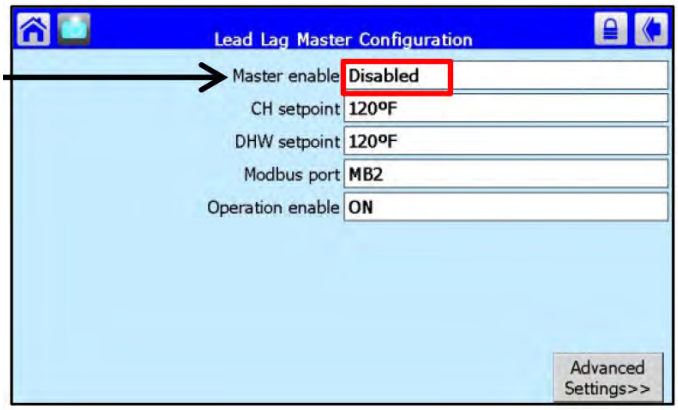

Confirm the Master control is ‘Enabled’.
If not enabled, press to select.

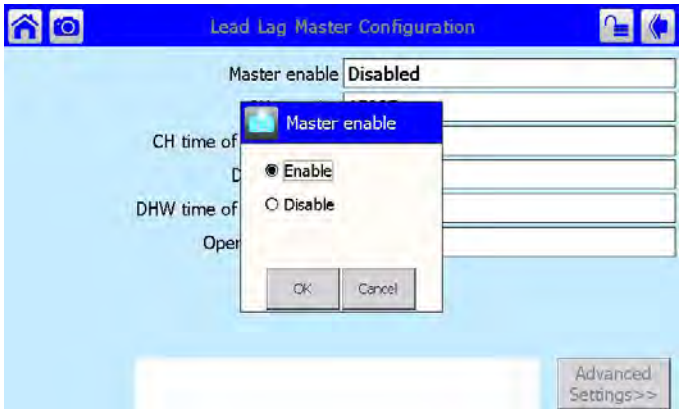

Select Master Control ‘Enable’
and Press OK

8.G.18 Lead Lag Leader Config (continued)

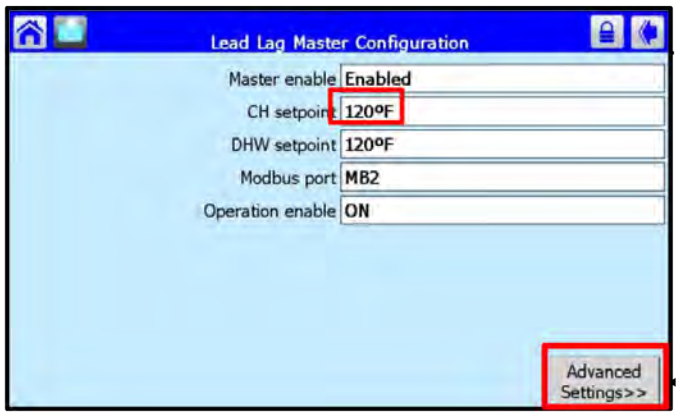

With the Master Control now Enable, press the setting box labeled 'CH setpoint'. Here you can adjust the desired Lead/ Lag system setpoint.
With desired CH Setpoint set, then press 'Advanced Settings'.

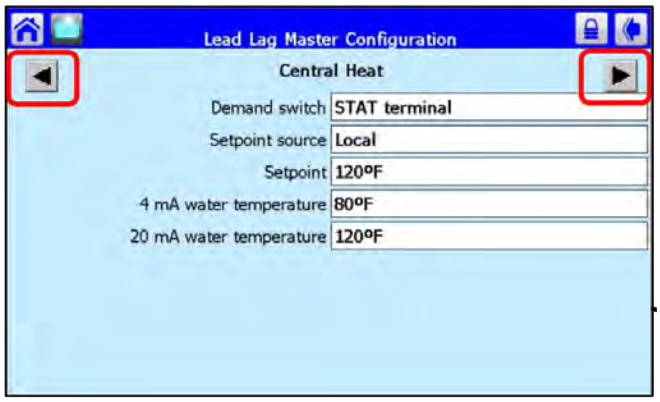

From this screen, use the Left or Right arrows to scroll to other screens. Make adjustments if needed.

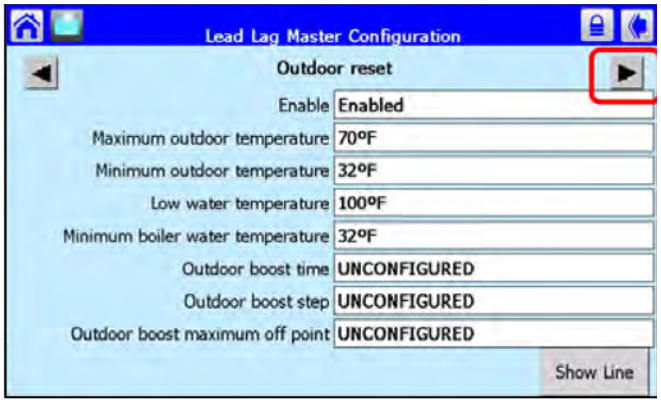

If you are using Outdoor Reset for Lead/ Lag, adjust the Maximum Outdoor Temp, Minimum Outdoor Temp and Low Water Temp by touching each set point line. The set point screen will appear. Make the adjustment, then press OK.
When finished, press the arrow to advance to the 'Warm Weather Shutdown' screen.

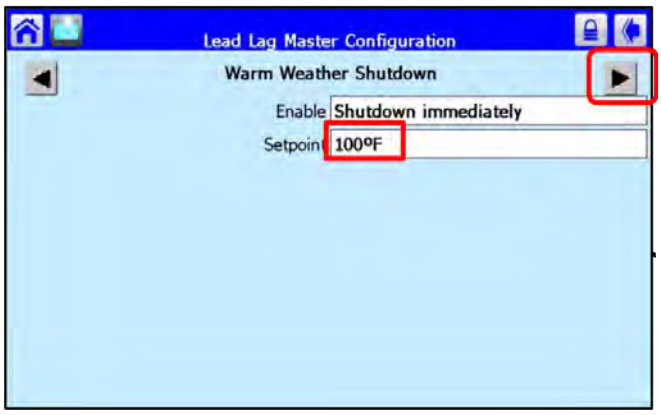

From the 'Warm Weather Shutdown' screen, adjust the setpoint.
When finished, press the arrow to advance to the 'Rate Allocation' screen.

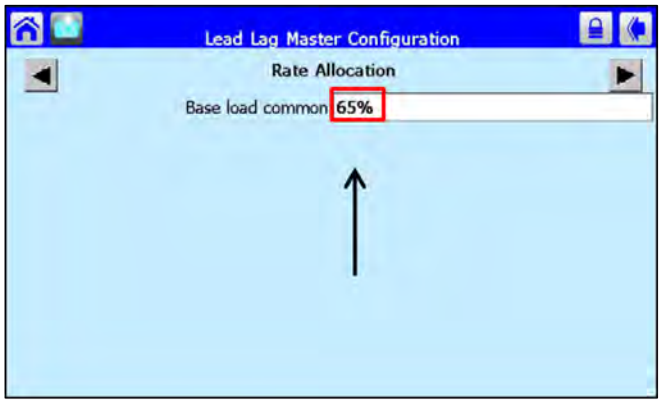

Adjust the "Base Load Common" value to the number of boilers in the cascade system. See chart for values.

Number of Boilers	Base load value
1	NA
2	65%
3	50%
4	35%
5	35%
6	35%
7	35%
8	35%

Chart for base values

8.G.18 Lead Lag Leader Config (continued)

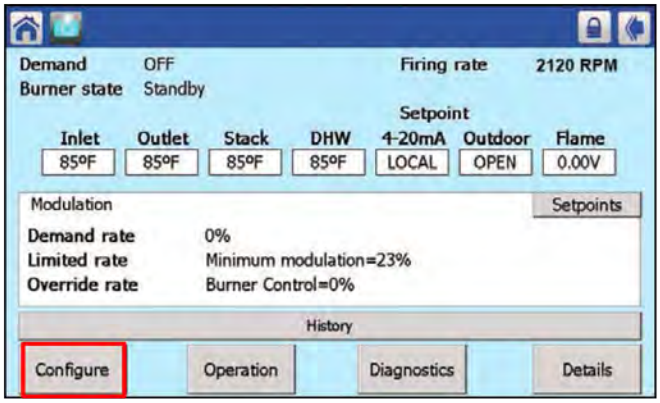

Note: In the Lead Lag Follower Sub-Menu, Identify each control **(including the Lead Lag Master)** as a Follower by turning on 'Follower Enable.
From the Status Summary Screen, press the 'Configure' button.

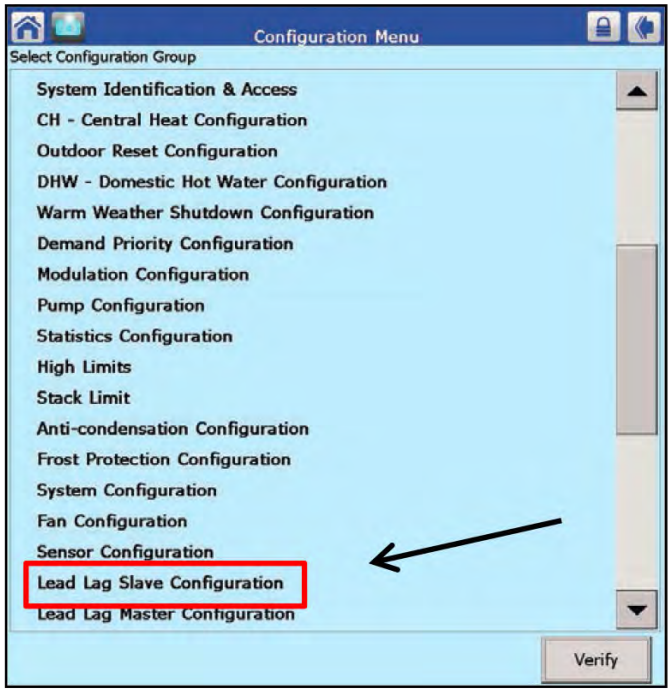

Scroll down and press 'Lead Lag Follower Configuration'

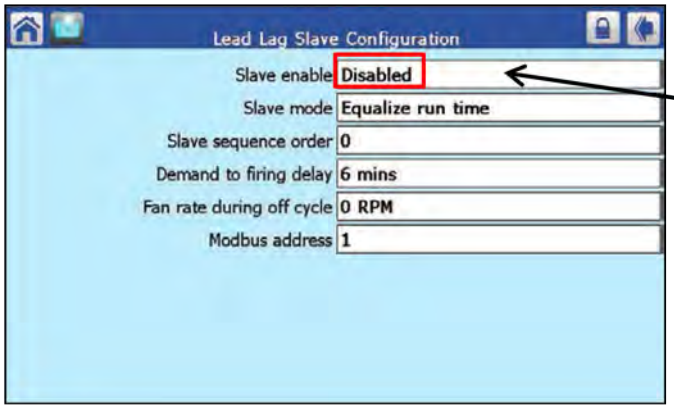

Press 'Disabled''

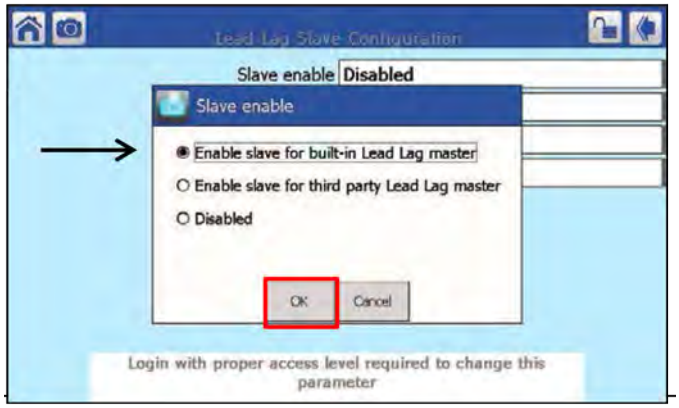

Choose 'Enable Follower for built-in Lead Lag Master' Then press 'OK'.

The lead boiler (Master control) is now configured.

9.G.18.a About Lead Lag Operation

You can cascade up to eight (150 - 850 MBH) boilers or water heaters.

For wiring connections to Lead Lag, see Figure 34 on page 48

About Lead Lag Operation -

If an installation includes two or more boilers, they may be set up for "Lead Lag" operation. One boiler will be set up as the "Leader", and the others will operate as "Followers." Figure 41 shows an installation with the Lead Lag Maximum of eight (150-850 MBH) boilers. The boiler controllers are connected in a "daisy chain" using a Modbus connection.

A single System sensor is used to monitor the demand for heat. The input from this sensor is used by the Leader controller to control the modulation rates of all of the operating boilers.

Lead Lag Modulation Cycle -

Note - We will explain the modulation cycle here, in case you need to understand how the Lead Lag system actually operates. If you are installing the unit(s) and want to skip this section, just remember that, as the heating demand increases, the Lead Lag system puts more boilers on-line. As the heating demand is reduced, the Lead Lag system shuts off some of the boilers.

The signal from the System sensor is sent to the unit operating as the Lead Lag Leader. A Run sequence is initiated when the system temperature falls to the Lead Lag Central Heat setpoint. (Actually this is the LL CH setpoint less the On Hysteresis value. The default setting for On Hysteresis is 5°F, but this is adjustable.)

Notice that, when a boiler is operating as part of a Lead Lag system, it does not use the normal CH setpoint – it uses the special LL CH setpoint on the Lead Lag Leader.

The unit acting as the Lead Lag Leader decides which boiler is assigned to start first. This assignment is rotated across all of the available boilers so that any one boiler does not run significantly longer than the others. The Lead Lag controller tracks the run times for all of the boilers, and uses this to calculate the starting order for the boilers. This means that each time the system starts up, a different boiler may start first.

> ⚠ Caution
>
> You should set the Modbus addresses before you connect the Modbus wiring. If the wiring is attached before the Modbus addresses on the controls are changed, there will be multiple controls with the same address, and the system will not work.

> ⚠ WARNING
>
> If the Modbus addresses are not assigned properly, the system could fail to operate correctly, or it might operate in an unsafe manner. This could lead to property damage, personal injury or death.

- When the Run sequence is initiated, the boiler with the least amount of runtime will fire.
- If the heating demand increases so that the firing rate of that first boiler rises to your boiler configurations Base Load Value **(see Figure 40 or Figure 42)**, the next boiler in the sequence will start up and begin firing at 20 to 35% fan speed (depending on your configuration). After this, the entire configuration of boilers will modulate up or down together, in reaction to the changes in demand.

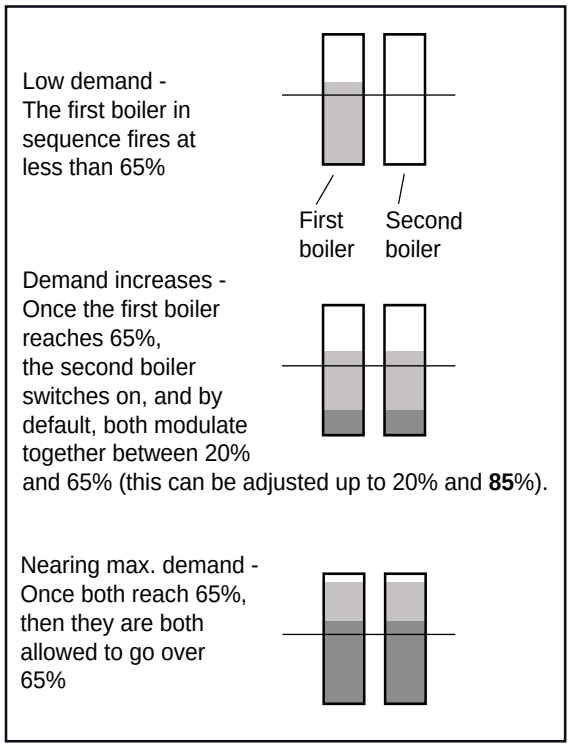

Figure 40. Lead Lag Operation, 2 boilers.

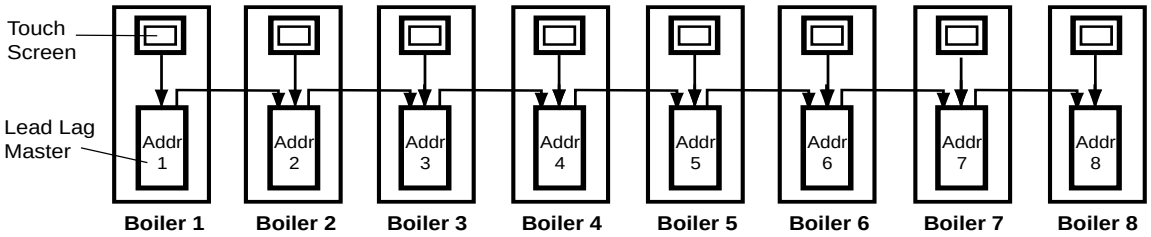

Figure 41. "Lead Lag" Operation in a System with Eight Boilers. Note: The Displays on Boilers 2 through 8 will display information pertaining only to that specific boiler.

Number of boilers installed	Base load value
1	NA
2	65%
3	50%
4	35%
5	35%
6	35%
7	35%
8	35%

Figure 43. Base Load Settings

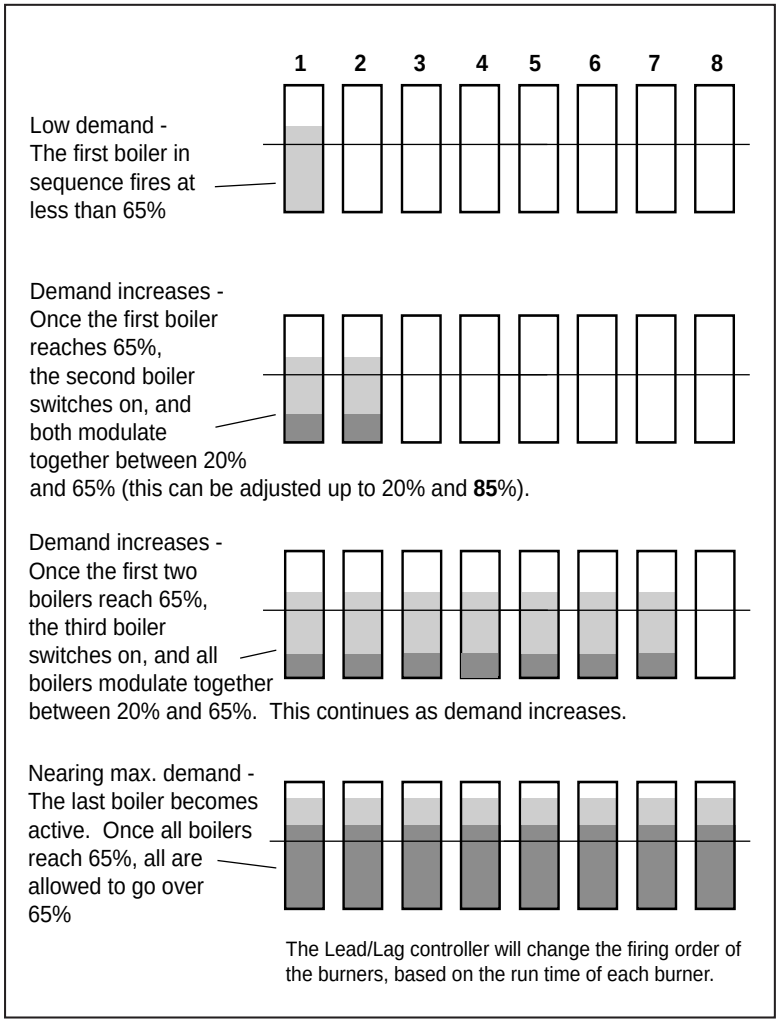

Figure 42. Lead Lag Operation, 3 or more boilers

Control Settings for Lead Lag System - Part 1

1. Power up all of the boilers in the system.
2. In an installation with several boilers, you must give each boiler a different name, sot that the controller of the Lead Lag Leader can communicate with the other units. All of the units come from the factory with a Modbus address of "1," so you will need to change some of these addresses. On each unit, go to the screen for "System ID and Access," and enter a unique name.
3. The unit operating as the Lead Lag Leader must be 'Leader Enabled' first and then set up address "1," and the other boilers should each be 'Follower Enabled' and have unique Modbus address numbers typically 2 through X (total number of boilers)

9.H Configure for a Building Automation System

These units can be controlled and monitored through the included Modbus ports. If communication protocols are desired, manufacturer offers the Gateway Control to allow BACnet, LON, and other communications protocols.
The Modbus Connections must be completed as shown in Figure 33 on page 46, and Figure 34 on page 48.

And you must set up your CH Configuration for SetPoint and Modulation as shown on Menu 18 on page 59. For additional information on setting up Modbus and other communication protocols, contact the factory.

Menu 19. Home Screen

Starting at the Home Screen, tap onto the Display Setup button on the bottom right of the lead boilers screen.

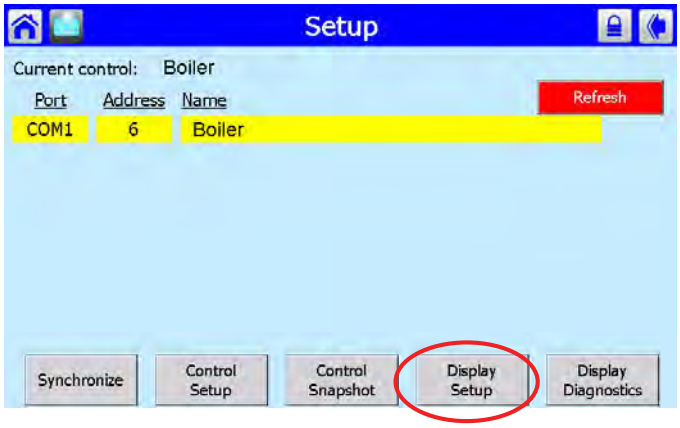

Menu 20. Setup Menu

From the Setup menu, tap the Display Setup button.

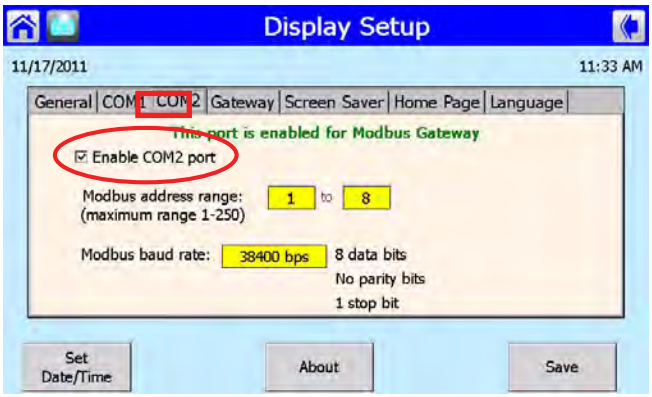

Menu 21. Display Setup -COM2

Select the COM2 tab and make sure that the COM2 port is enabled.

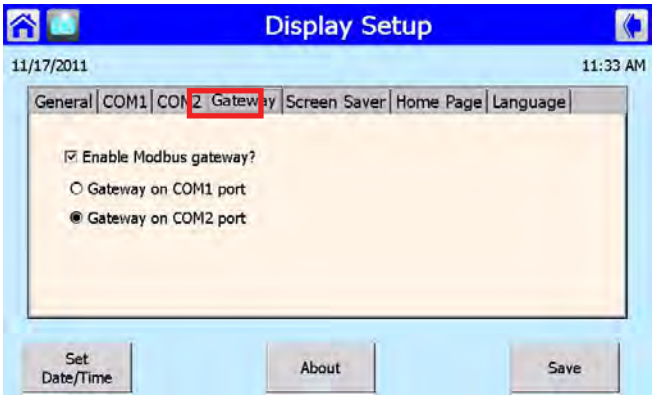

Menu 22. Display Setup -Gateway

Select the Gateway tab and make sure that the Gateway on COM2 port is enabled. Then return to the Homescreen.

9.I Combustion Setup

In this section, we will explain how to adjust the gas valve so the unit will run efficiently at both the High Fire and Low Fire conditions.

Required tools: Screwdrivers, Torx bits, Allen Wrench Set, Combustion Analyzer

> **⚠ WARNING**
> Improper adjustment may lead to poor combustion quality, increasing the amount of carbon monoxide produced. Excess carbon monoxide levels may lead to personal injury or death.

1. On the Gas Valve, locate the adjustments for High Fire, and Low Fire. See Figure 44 on page 74 thru Figure 46 on page 76.

   Refer to Table 18 on page 74 and Table 19 on page 75 for appropriate CO2 ranges.

2. Press the Control Icon at the center of the Home Screen.

Menu 23. 'Home' screen

3. The system will present the Status Summary screen.

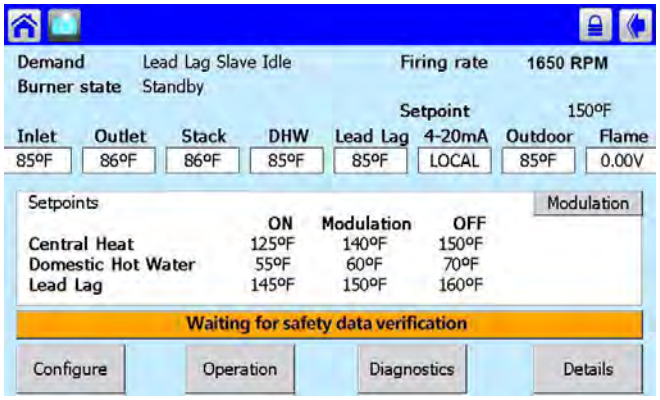

Menu 24. Status Summary Screen

4. Press the 'Diagnostics' button in the lower right corner.

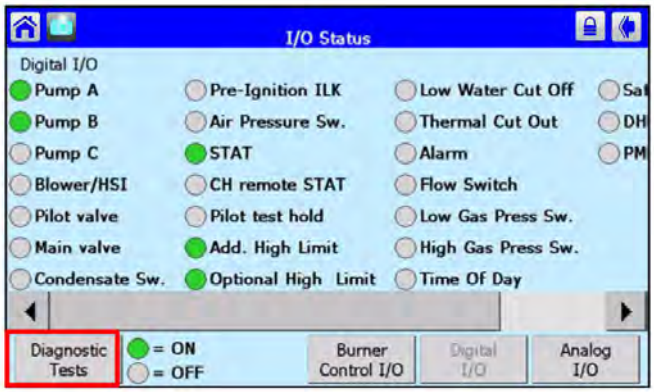

Menu 25. I/O Status Menu

5. Press the 'Diagnostics Test' button.

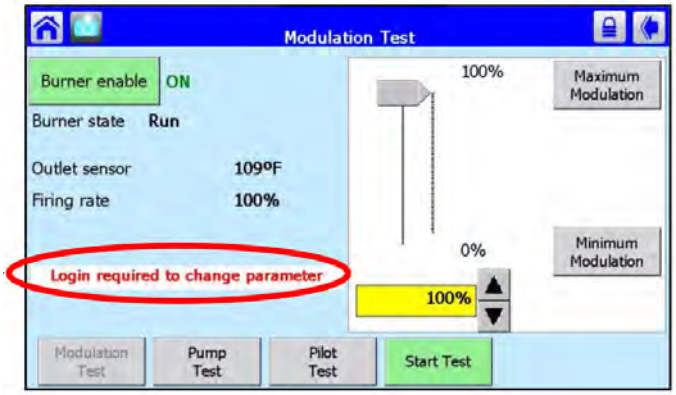

Menu 26. Modulation Test Menu

6. Make sure you are logged in and the padlock symbol is unlocked.

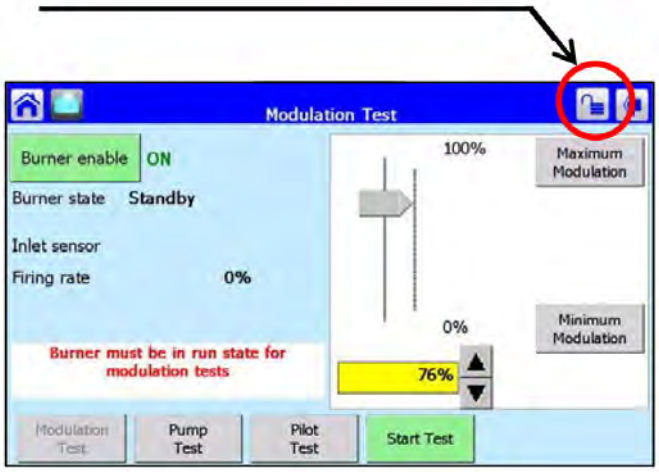

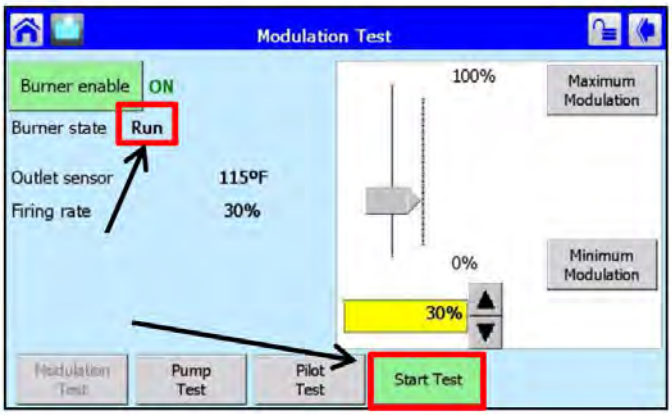

7. Confirm that the boiler is running and then press 'Start Test'

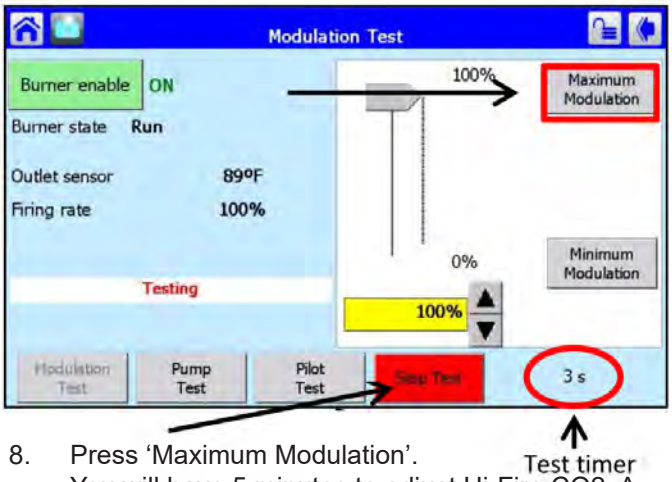

8. Press 'Maximum Modulation'.
   You will have 5 minutes to adjust Hi-Fire CO2. A test timer will appear on the bottom right corner of the screen counting up to 5 to 5 minutes.

   Be sure to give your combustion analyzer time to get a stable reading after making the Hi-Fire adjustment at the gas valve.

9. Once Hi-Fire CO2 is within an acceptable range, press 'Stop Test'.

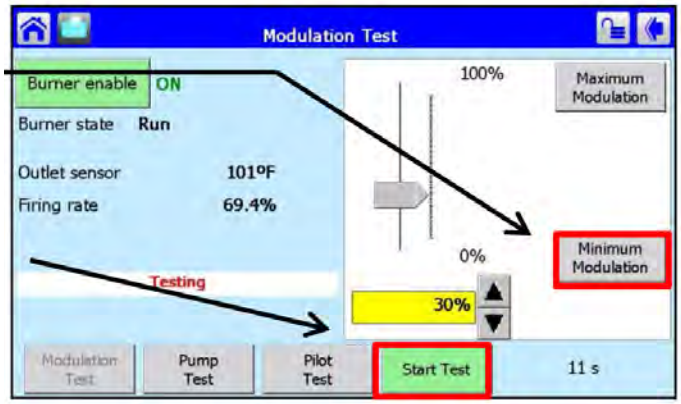

10. Press 'Minimum Modulation'

11. Press 'Start Test'. You will have 5 minutes to adjust Low-Fire CO2. Press 'Stop Test' when done.

12. Repeat steps 6 through 11 a few times to confirm that both Hi-Fire and Low-Fire are within the acceptable levels for your unit.

    See Figure 44 thru Figure 46.

9.J Adjusting CO_2

These units use 3 different gas valves depending on the the size of the model. All of them have a Hi-Fire and Low-Fire adjustment.

See page 74 for models 150-285,

See page 75 for models 399-500, and

See page 76 for models 600-850.

The Gas Valve in the 150 thru 285 is at the front of the unit and can be reached after the front panel is pulled forward and then off.

Always be patient with your combustion analyzer when making adjustments to the valve at both Hi-Fire and Low-Fire.

Be sure to put the cap back onto the valve when you are done making your adjustments at the gas valve.

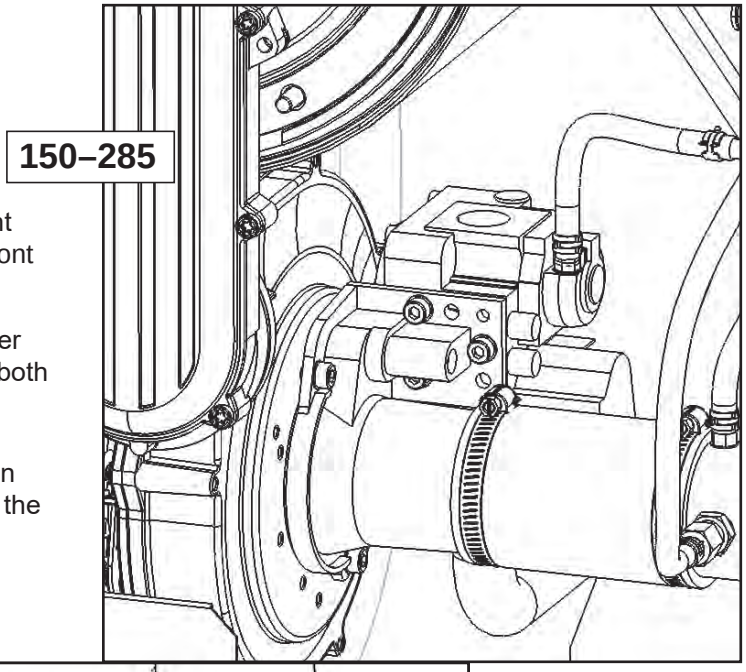

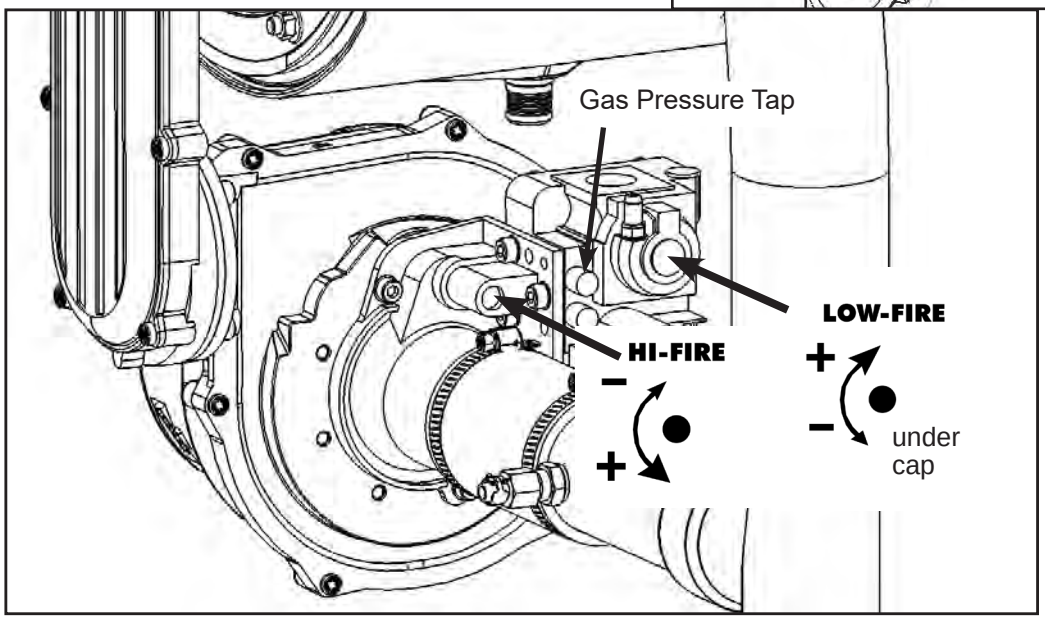

Figure 44. Gas Valve 150 - 285 Mbtu

GAS TYPE	HIGH FIRE, CO_2	LOW FIRE, CO_2	DIFFRNTL PRESSURE (**inches wc**)
Natural	8.8 to 9.8%	0.5% lower than high fire setting	3.6” to 3.9”
Propane	9.8 to 10.2%		

Table 18. Residential, sizes 150 - 285 Mbtu CO_2 Range and Differential Pressure

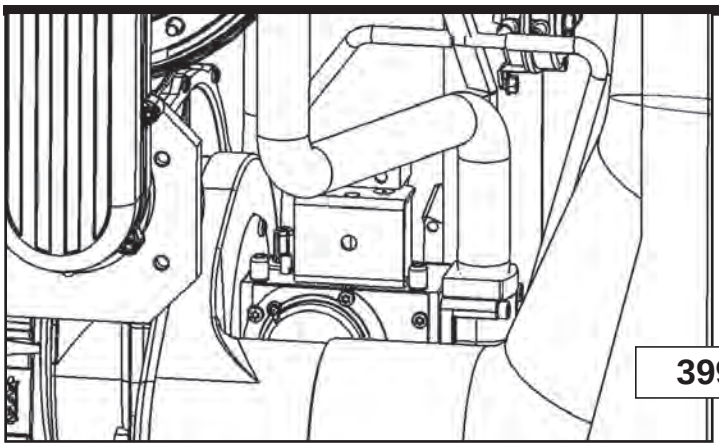

The Gas Valve in the **399 and 500** is at the front of the unit and can be reached after the front panel is pulled forward and then off.

Always be patient with your combustion analyzer when making adjustments to the valve at both Hi-Fire and Low-Fire.

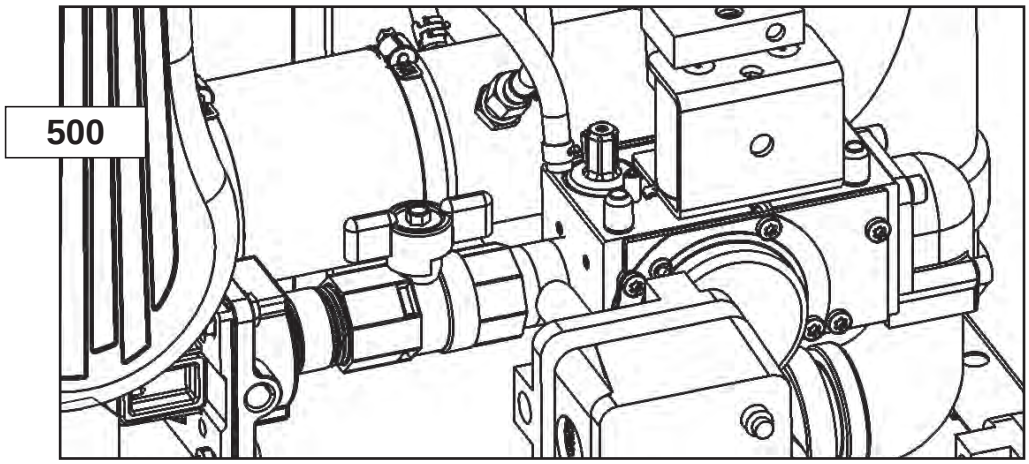

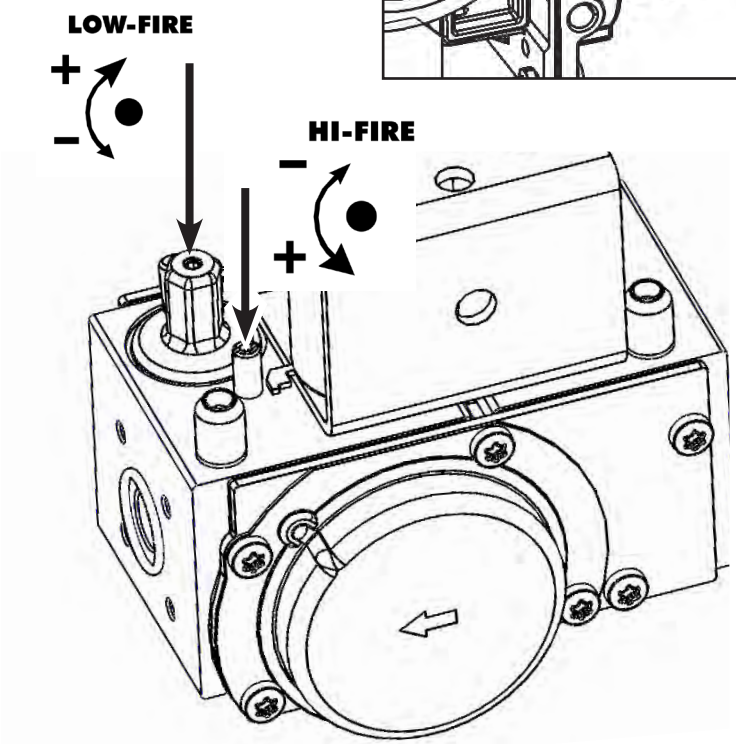

Figure 45. Gas Valve 399 - 500 Mbtu

GAS TYPE	HIGH FIRE, CO_2	LOW FIRE, CO_2	MANIFOLD PRESSURE
Natural	8.8 to 9.0%	0.5% lower than high fire setting	-.005” to -.015” wc
Propane	9.8 to 10.0%		

Table 19. Commercial, sizes 399 - 850 Mbtu CO_2 Range and Manifold Pressure

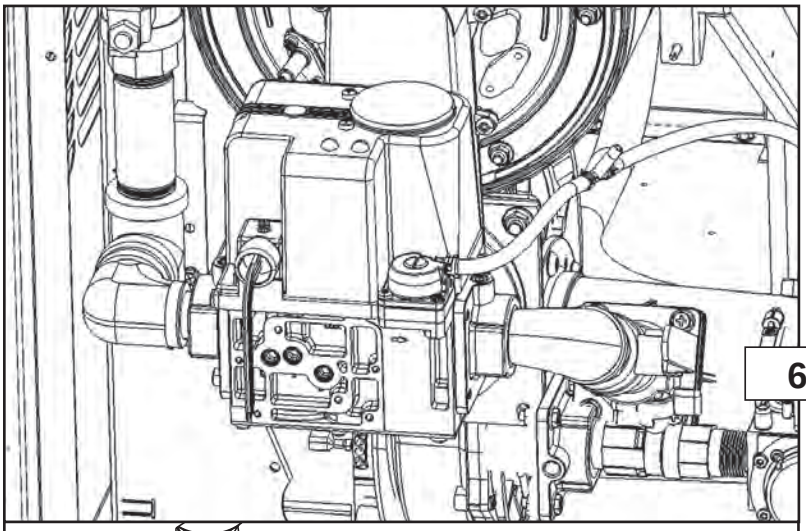

600

The Gas Valve in the **600** is at the front of the unit and can be reached after the front panel is pulled forward and then off.

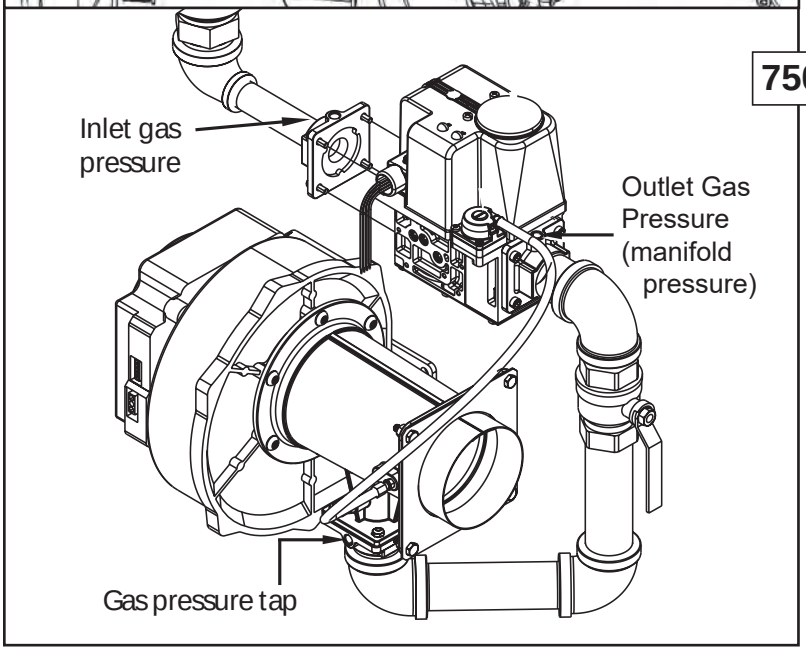

750, 850

The Gas Valve in the **750 and 850** models can only be reached by removing the top panel of the unit. It cannot be accessed from the front like the smaller units.

Always be patient with your combustion analyzer when making adjustments to the valve at both Hi-Fire and Low-Fire.

Be sure to put the cap back onto the valve when you are done making your adjustments at the gas valve.

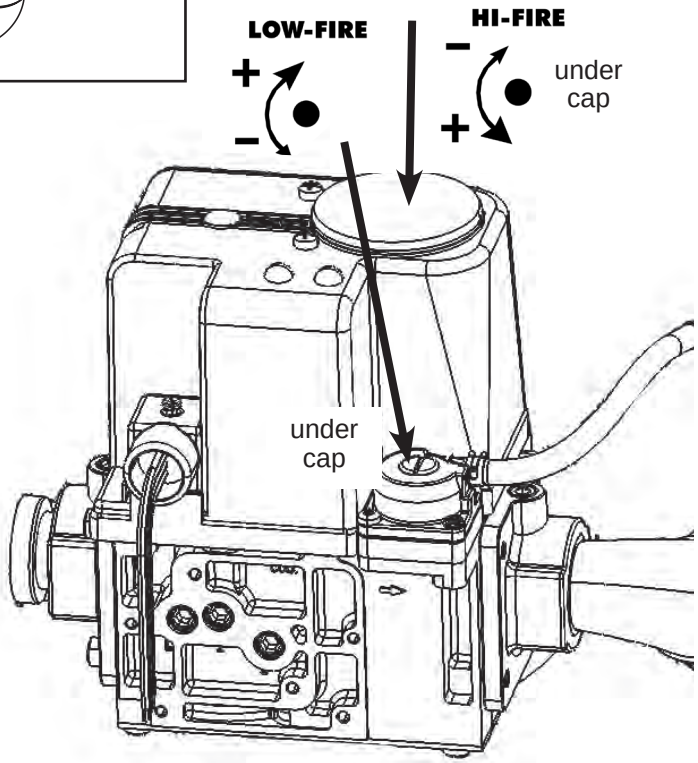

Figure 46. Gas Valve 600 - 850 Mbtu

SECTION 10 FIRST START UP AND ADJUSTMENT

10.A Filling the Boiler System

1. Ensure the system is fully connected. Close all bleeding devices and open the make-up water valve. Allow the system to fill slowly.
2. If a make-up water pump is employed, adjust the pressure switch on the pumping system to provide a minimum of 12 psi (81.8 kPa) at the highest point in the heating loop.
3. If a water pressure regulator is provided on the make-up water line, adjust the pressure regulator to provide at least 12 psi (81.8 kPa) at the highest point in the heating loop.
4. Open all of the bleeding devices on all radiation units at the high points in the piping throughout the system, unless automatic air bleeders are provided at these points.

   Note - There is an air bleed (air vent with slotted top) located on the left side of heat exchanger, on top of the water manifold.
5. To remove all air from the heat exchanger, cycle

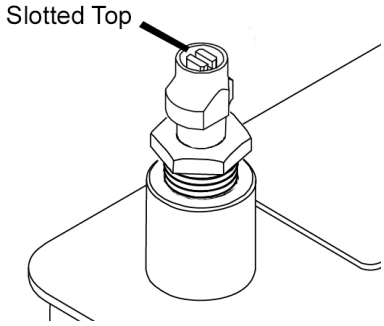

Figure 47. Air Vent

the boiler pump on and off 10 times, 10 seconds on and 10 seconds off, . Then run the system and appliance pumps for a minimum of 30 minutes with the gas shut off.

⚠ WARNING

Failure to remove all air from the heat exchanger could lead to property damage, severe injury or death.

6. Open all strainers in the circulating system, check the operation of the flow switch (if equipped), and check for debris. If any debris is present, clean it out to ensure proper circulation.
7. Recheck all air bleeders as described in Step 4.
8. Start up the boiler according to the procedure listed in this manual. Operate the entire system, including the pump, boiler, and radiation units for one hour.
9. Shut down the entire system and vent all radiation units and high points in the system piping, as described in Step 4.
10. Close the make-up water valve and check the strainer in the pressure reducing valve for sediment or debris from the make-up water line. Reopen the make-up water valve.
11. Check the gauge for correct water pressure and also check the water level in the system. If the height indicated above the boiler insures that water is at the highest point in the circulating loop, then the system is ready for operation.
12. Prime the condensate trap with water. (This is not required for Boiler 600, 750, and 850 units.)
13. Refer to local codes and the make-up water valve manufacturer's instructions as to whether the make-up water valve should be left open or closed.
14. After placing the unit in operation, the ignition system safety shutoff device must be tested.

    First, shut off the manual gas valve, and call the unit for heat. The main gas terminals will be energized, and attempt to light, for four seconds, and then will de-energize. The unit will go into lockout after the required number of trial for ignition periods.

    Next, turn the power Off, and then On again. Press the manual reset button on the boiler control, open the manual gas valve, and allow the unit to light. While the unit is operating, close the manual gas valve and ensure that power to the main gas valve has been cut.
15. Within three days of start-up, recheck all air bleeders and the expansion tank as described in Step 4.

Important Note: The installer is responsible for identifying to the owner/operator the location of all emergency shutoff devices.

⚠ WARNING

Do not use this appliance if any part has been under water. Manufacturer requires boilers and water heaters to be replaced, not repaired, if they have been partially or completely submerged.

10.B First Operation

⚠ Caution

The initial setup must be checked before the unit is put in operation. Problems such as failure to start, rough ignition, strong exhaust odors, etc. can be due to improper setup. Damage to the boiler resulting from improper setup is not covered by the limited warranty.

REQUIRED TOOLS: differential pressure gauge capable of reading negative 0.01 inches W.C. (0.002kPa), screw drivers, Torx bits, combustion analyzer.

1. Using this manual, make sure the installation is complete and in full compliance with the instructions and all local codes.
2. Determine that the appliance and system are filled with water and all air has been bled from both. Open all valves.
3. Observe all warnings on the Operating Instructions label and turn on the gas and main electrical power (circuit breaker) to the unit.
4. If the unit has the optional gas pressure switches, the low pressure gas switch will need to be reset.

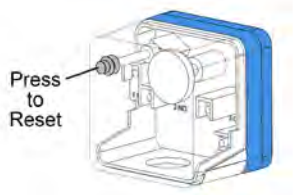

5. Turn the unit on at the On/Off switch.
6. The unit will begin the start sequence. The blower and pump will energize for the pre-purge period, then the ignition sequence will start.
   Note, prepurge and postpurge is a higher RPM than ignition.
   After all safety devices have been verified, the gas valve will open. If ignition doesn't occur, turn off the unit, and check that there is proper gas supply. Wait 5 minutes before restarting.
7. Follow 9.J on page 74 for set up of Combustion Mixture.
8. **After placing the appliance in operation, the Burner Safety Shutoff Device must be tested**:
   - Close the gas shutoff valve with the burner operating.
   - The flame will go out and the blower will continue to run for the post purge cycle. One or three additional attempts to light will follow. Each cycle will include pre-purge, ignitor on, valve/flame on, and post purge. Ignition will not occur because the gas is off. The ignition control will lockout after a single try or a third try depending on the controller model.
   - Open the gas shutoff valve. Reset the boiler control by pressing the Reset button on the control or on the display. If the unit has the optional gas pressure switches, you will need to reset the low pressure switch. Find the low pressure switch and press the reset button. Restart the appliance. The ignition sequence will start again and the burner will start. The appliance will return to its previous mode of operation.

⚠ WARNING

If you detect any odor of gas, or if the gas burner does not appear to be functioning in a normal manner, CLOSE THE MAIN SHUTOFF VALVE. Do not shut off the switch. Contact your heating contractor, gas company, or factory representative.

10.C Shutting Down the Unit

1. Turn off the main electrical disconnect switch.
2. Close all manual gas valves.
3. If you think the unit might freeze, drain it. All water must be removed from the heat exchanger, or damage from freezing may occur. Also be sure to protect the piping in the building from freezing.

⚠ Caution

This step must be performed by a qualified service person.

10.D Restarting the Unit

If the unit has been drained, see Section 9.1 in this manual for instructions on filling and purging the unit properly, before continuing.

1. Turn off the main electrical disconnect switch.
2. Close all manual gas valves.
3. **WAIT FIVE (5) MINUTES.**
4. Set the aquastat or thermostat to its lowest setting.
5. Open all manual gas valves.
6. Reset all safety switches (low pressure gas switch, manual reset high limit, etc.).
7. Set the temperature controller to the desired temperature setting, and switch on electrical power.
8. The burner will go through a prepurge period followed by ignition.

SECTION 11 MAINTENANCE

WARNING

Disconnect all power to the appliance before attempting any service. Contact with electricity can result in severe injury or death.

11.A System Maintenance

Do the following once every 6 months.

1. On Outdoor models only as needed per air quality, remove and inspect the air filter. Clean with soapy water if needed. Be sure that filter is dry before re-inserting back into air filter box. Replace air filter if damaged. .

Do the following once every year:

1. Lubricate all the pumps in the system, per the instructions on the pump.
2. Inspect the venting system for obstruction or leakage. Periodically clean the screens in the vent terminal and combustion air terminal (when used).
3. Remove and inspect the air filter. Clean with soapy water if needed. Be sure that filter is dry before re-inserting back into air filter box. Replace air filter if damaged.
4. Keep the area around the unit clear and free of combustible materials, gasoline, or other flammable vapors or liquids.
5. If the unit is not going to be used for extended periods in locations where freezing normally occurs, it should be isolated from the system and completely drained of all water.
6. Low water cutoffs, if installed, should be checked every year on commercial units. Residential models need to be checked every 5 years. Float type low water cutoffs should be flushed periodically.
7. Inspect and clean the condensate collection, float switch and disposal system yearly.
8. When a means is provided to neutralize condensate, ensure that the condensate is being neutralized properly.
9. Inspect the flue passages, and clean them using brushes or vacuums, if necessary. Sooting in flue passages indicates improper combustion. Determine the cause of the problem and correct it.
10. Inspect the vent system and air intake system, and ensure that all joints are sealed properly. If any joints need to be resealed, completely remove the existing sealing material, and clean with alcohol. Apply new sealing material, and reassemble.
11. The Pressure Relief Valve should be inspected and tested every year.

Caution

Label all wires prior to disconnection when servicing controls. Wiring errors can cause improper and dangerous operation. Verify proper operation after servicing.

Avertissement

Tous les fils avant la déconnexion lors de l'entretien des contrôles. Les erreurs de câblage peut causer le mauvais et de danger-uo opération. Vérifier le fonctionnement correct après l'entretien.

11.B Appliance Maintenance and Component Description

Use only genuine replacement parts.

The gas and electric controls in the unit are engineered for long life and dependable operation, but the safety of equipment depends on their proper functioning. Only a qualified service technician should inspect the basic items listed below every year:

a. Appliance control
b. Automatic gas valve
c. Air filter
d. Pressure switches
e. Blower
f. Pump
g. Flow switch
h. Low water cutoff
i. Burner
j. Heat exchanger
k. Ignitor

Burner

Check the burner for debris. Remove the blower arm assembly to access the burner. Remove the four bolts connecting the blower to the arm. (See Figure 47.) Remove the five bolts which hold the burner arm in place. Pull the burner up and out. Clean the burner, if necessary, by blowing compressed air from the outside of the burner into the center, and wipe the inside clean with glass cleaner. A dirty burner may be an indication of improper combustion or dirty combustion air. Determine the cause of this, and correct it. If the burner gasket is damaged, replace it when replacing the burner.

When Re-Installing the Burner Door, ensure all gaskets are properly seated and the mating surfaces are clear and properly aligned. Any leakage of heat and flue products will cause deformation and deterioration of the metals which may result in permanent damage to the heat exchanger assembly.

When mounting the burner door to the heat exchanger first finger tighten each of the flange nuts using a star pattern to ensure the door is properly aligning with mounting surface. Continue to snug nuts using the star pattern and a standard wrench. Finally using a torque wrench tighten the nuts down to 44in. lbs. (5Nm).

See Figure 48 on page 80

Figure 48. Torque Pattern

When mounting the Flapper, adapter or air channel to the door use the same star pattern method to ensure proper fit. Using a torque wrench ensure fasteners are tightened to 44in. lbs. (5Nm).

NOTE: When installing the burner, make sure the flange is aligned with the mating surface, as each is keyed to control the fit.

Modulating Gas Valve / Venturi

The modulating gas valve consists of a valve body that incorporates the On/Off gas flow control and a negative pressure regulator. It provides the air/gas ratio control in combination with the Venturi to the unit. It is designed to operate with a gas supply pressure between 4 and 13 inches w.c. To remove the gas valve and/or Venturi, shut off the 120 Volt power supply to the boiler. Turn off all manual gas valves connecting the boiler to the main gas supply line. Remove the front door of the boiler to gain access to the gas valve and Venturi. Disconnect the four flange bolts connecting the gas manifold pipe to the gas valve. Remove the electrical connections to the gas valve. Remove the bolts connecting the Venturi flange to the blower. This allows the entire gas valve and Venturi assembly to be removed to facilitate inspection and cleaning.

Reassemble the valve/Venturi assembly in reverse order, making sure to include all gaskets and O-rings. Turn on the manual gas valves and check for gas leaks. Turn on the 120 Volt power. Place the unit in operation following the instructions in Section 9. Once the boiler is operating. check for leaks again and confirm that all fasteners are tight.

Check the appliance setup according to Section 9.

Appliance Control

The unit has an integrated control that incorporates manual reset high limit control, operating temperature control, modulating control, ignition control, outdoor reset control, pump control and many other features. If any of these features are thought to be defective, please consult the factory for proper trouble shooting practices prior to replacing the control. If control replacement is required, turn off all power to the appliance and shut off all manual

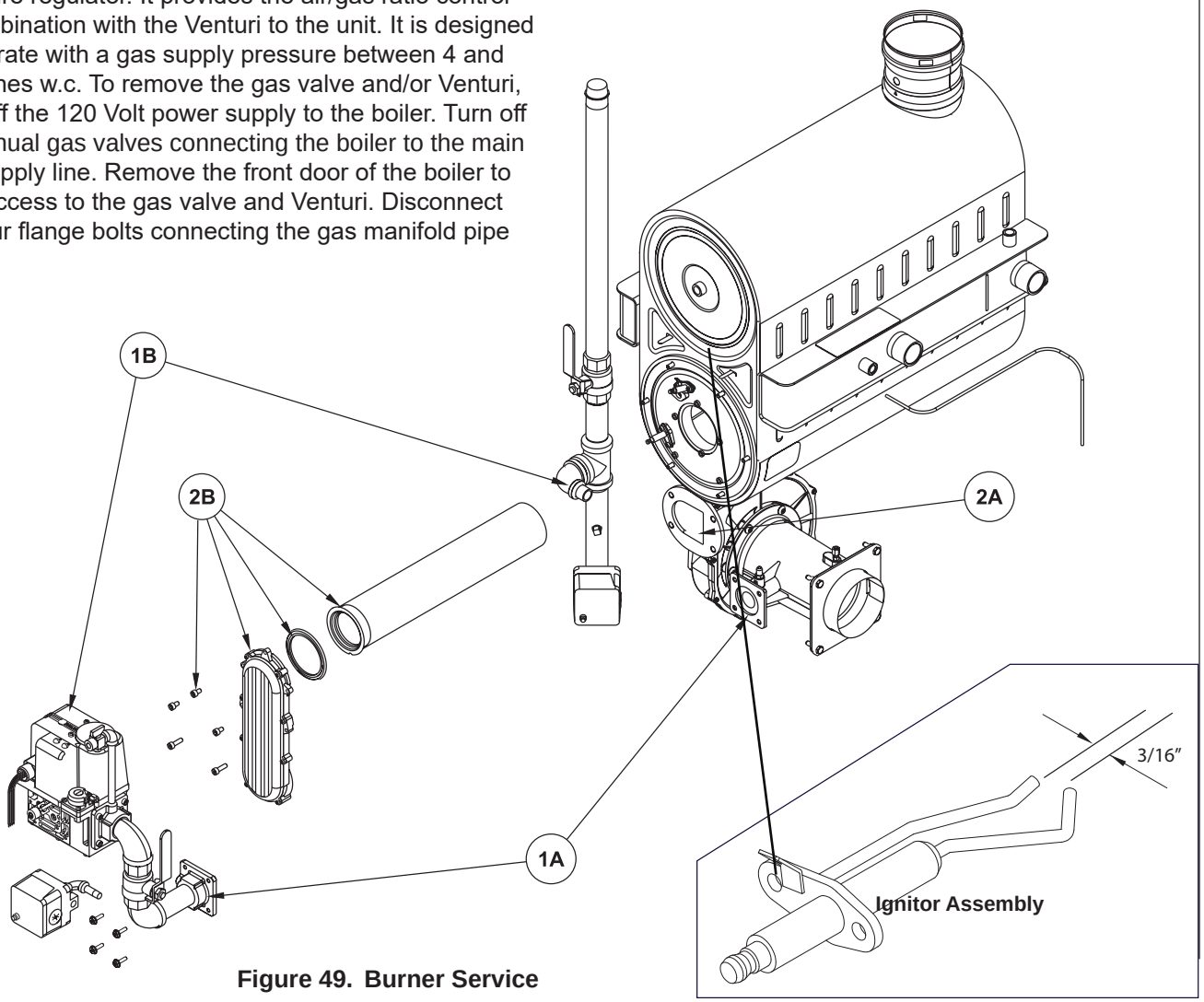

Figure 49. Burner Service

gas valves to the appliance. Remove the front door to the appliance and the plastic bezel and the control panel. Remove all wire connections from the control board. The control board connections are keyed to only allow connection in the proper location, but proper handling techniques should be used to avoid damage to the wiring or connectors. To remove the control, push in on the two tabs on the left side of the board to unlatch the clips from the control panel. Rotate the control around the fastening points on the right side of the control to remove the hooks from the control panel. To replace the control, repeat the steps listed above in the reverse orders making sure to connect all wires in the proper locations. Place the appliance in operation following the steps outlined in Section 9.

Ignitor Assembly

The ignitor assembly is a two rod system that consists of a ground rod and a spark rod (See Figure 47). To remove the ignitor assembly, shut off the 120 Volt power supply to the appliance. Turn off all manual gas valves connecting the appliance to the main gas supply line. Remove the front door of the boiler to gain access to the ignitor assembly. Remove the two wires connected to the assembly. Then remove the two bolts connecting the ignitor assembly to the burner door. If the old ignitor assembly is determined to be defective, install a new ignitor assembly (check that the spark gap is 3/16”). Replace the gasket if necessary.

Flame Sensor

The flame sensor is a single rod system. To replace the flame sensor electrode, shut off the 120 Volt power supply to the boiler. Turn off all manual gas valves connecting the boiler to the main gas supply line. Remove the front door of the boiler to gain access to the flame sensor electrode. Remove the flame sensor wire from the electrode. Remove the two bolts fastening the electrode to the burner doors. Remove and replace the old flame sensor gasket. If the old electrode is determined to be defective, install a new flame sensor electrode in the reverse order.

⚠ Caution

The ignitor and sensor may be hot, and can cause burns or injury.

Transformer with Integral Circuit Breaker

The appliance has a 24Vac transformer with integral 4 amp circuit breaker installed to supply the control voltage required for the appliance. The transformer is sized to provide power for the unit only, and should not be used to supply power to additional field devices. If additional loads are added, or a short occurs during installation, the integral circuit breaker may trip. If this happens, be sure to reset the circuit breaker before replacing the transformer.

The transformer is mounted underneath the control panel. If the transformer must be replaced, turn off the 120Vac power to the appliance. Remove the transformer wires from the terminal blocks. Remove the fasteners holding the transformer, then remove the transformer. Replace with a new transformer in the reverse order.

If the transformer is replaced with a part other than the OEM transformer, be sure to add circuit protection if it is not integral to the new transformer.

⚠ WARNING

Failure to include proper circuit protection may lead to premature component failure, fire, injury or death.

Blower

The combustion air blower is a high-pressure centrifugal blower with a variable speed motor. The speed of the motor is determined by the control logic. 120 Volt power remains on to the blower at all times. If the blower must be changed, turn off the 120 Volt power and gas supply to the unit. Take the front panel off. Disconnect the 120 Volt and control signal connections from the blower. Disconnect the bolts connecting the Venturi to the blower housing. Disconnect the fan outlet bolts from the burner door blower arm. If the fan is determined to be defective, replace the existing fan with a new one, reversing the steps listed above. Be sure to install all of the required O-rings and gaskets between the blower arm and the blower and blower face and venturi flange.

Heat Exchanger Coils

Black carbon soot buildup on the heat exchanger is caused by one or more of the following; incomplete combustion, combustion air problems, venting problems, or heater short cycling. Soot buildup or other debris on the heat exchanger may restrict the flue passages.

If black carbon soot buildup on the heat exchanger is suspected, disconnect the electrical supply to the unit, and turn off the gas supply by closing the manual gas valve on the unit. Access the heat exchanger through the burner door at the front of the boiler, and inspect the tubing using a flashlight. If there is a buildup of black carbon soot or other debris on the heat exchanger, clean using this procedure:

⚠ WARNING

Black carbon soot buildup on a dirty heat exchanger can be ignited by a random spark or flame. To prevent this from happening, dampen the soot deposits with a wet brush or fine water spray before servicing the heat exchanger.

NOTE: The Warranty does not cover damage caused by lack of required maintenance, lack of water flow, or improper operating practices.

⚠ WARNING

Failure to rinse the debris from the heat exchanger and temporary drain line may lead to clogged condensate lines, traps and neutralizers. Condensate pumps (if used) may also be damaged by the debris left behind, possibly causing property damage.

1. Shut off the 120 Volt power supply to the boiler
2. Turn off all manual gas valves connecting the boiler to the main gas supply line.
3. For size 600 models only:
   (All other sizes please skip to step four)

   size 600 models will require the gas valve to be removed in order to remove the burner door. To do this, remove the wiring connections from the gas valve. Remove the flange bolts from the gas supply pipe connected to the gas valve (1B). Remove the flange bolts connecting the gas train to the Venturi (1A). Remove the gas train assembly, and keep the gaskets and O-rings.
4. Remove the four bolts connecting the blower flange to the burner door arm.
5. Remove the nuts located on the outside diameter of the burner door to the heat exchanger.
6. Remove the burner door and burner assembly from the heat exchanger.
7. Disconnect the condensate drain line.
8. Attach a longer hose to the drain and run it to a bucket.
9. Clean the heat exchanger by brushing away any light accumulations of soot and debris. Use a brush with soft bristles (non metallic) to avoid damaging the surfaces of the heat exchanger tubes.
10. Once the tubes have been brushed clean, rinse the tubes and combustion chamber with a small amount of water to rinse all of the debris out of the bottom of the flue collector and into the longer condensate trap line. This will be diverted into the separate container.
11. Install all components removed in the reverse order to place the appliance back in operation. Be sure all gaskets are in place as the components are installed. Replace any damaged gaskets. Do ***not*** reuse damaged gaskets.
12. Place the appliance in operation according to the instructions in Section 10. Check all gas connections for leaks. Confirm that all fasteners are tight.

Optional Gas Pressure Switches

The high and low gas pressure switches are 24V manual reset switches that act to cut power to the gas valves if the gas pressure is too low or too high for proper operation.

If your boiler is equipped with the Optional Gas Pressure Switches, then the Low Pressure Switch will need to be reset.

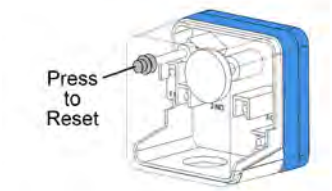

The gas pressure switches used are integrally vent limited, and do not require venting to atmosphere. To remove a switch, remove the screw on the plastic housing and pull the clear cover off. Disconnect the two wires from the screw terminals. Twist the switch off the pipe nipple. Reassemble in reverse order. For natural gas, set the low gas pressure switch to 3” w.c. For propane, set the low gas pressure switch to 5” w.c. For natural and propane, set the high gas pressure switch to 14”.

11.C Battery Backup for Date & Time

The touchscreen does have an internal battery for back-up of the date and time settings. To access the battery, the front panel and the touch screen display must be removed so that the small plastic door on the back of the touchscreen can be accessed.

The battery is a CR2032 ‘coin type’ battery and has an expected service life of 10 years. If the battery needs to be replaced, find the small plastic door on the back of the Touchscreen Display, remove the old battery and insert the new battery.

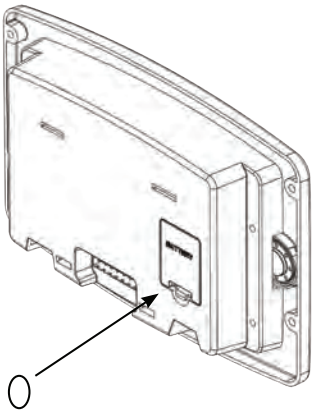

11.D Gas Conversion

These units can easily be converted from natural to propane gas or from propane to natural gas in the field. Some units require the addition of a gas orifice along with proper gas valve adjustment. Other units require no additional parts - only proper gas valve adjustment. Please contact the manufacturer for specific information regarding the gas conversion of a particular appliance. If a gas conversion is performed, the unit must be identified with the appropriate gas labels and a conversion sticker to allow technicians performing maintenance in the future to properly identify the type of gas being used in the appliance.

size (mbtu)	Kit number
150	CA006203
199	CA006204
285	CA006205
399	CA008600
500	CA008600
600	CA008600
750	CA008600
850	CA008600

Table 16a - Propane Gas Conversion Kits

size (mbtu)	Kit number
150	CA006206
199	CA006206
285	CA006206
399	CA008600
500	CA008600
600	CA008600
750	CA008600
850	CA008600

Table 16b - Natural Gas Conversion Kits

Section 11
TROUBLESHOOTING

11.A Lockouts, Holds, and Alerts

The control system responds to three kinds of trouble indications:

- **LOCKOUT:** A "lockout" is caused by a serious problem that might involve a safety issue. Once the controller enters a lockout, the burners will shut down, and will not be allowed to run again until the cause of the problem is corrected, and the control is manually reset. The controller will also lockout if you change a safety-related parameter, and the unit will require 'Safety Verification' before the control will be allowed to operate. (For more information on verification, see Section 9) During a lockout condition, the image of the affected controller on the 'home' screen will appear in red. A bell symbol will appear in the upper left-hand corner of the control screen. The system maintains a "history" of the 15 most recent lockouts.
- **HOLD:** The system may enter a "hold" for a period of time before locking out. This allows the controller to see if the error becomes resolved prior to the hard lockout. Holds may also show during ignition sequence and normal operation, as the control moves from one task to another.
- **ALERT:** An "alert" indicates that some feature of the control system's operation was not correct, delayed or waiting for a response. This indicates a change in state of the control system and doesn't necessarily mean there is a problem. For example, Alerts occur as the fan speed transitions from the pre-purge to the startup. This indicates that the control system is waiting for a condition to be satisfied. No Reset is required to recover from an alert. The system maintains a "history" of the 15 most recent alerts. Sometimes it can be helpful to check this list as a troubleshooting aid.

11.A.1 Responding to a Lockout, Hold, or Alert

1. If a problem occurs while the system is starting up, the system will declare a Hold. A brief explanation of the cause of the Hold will appear in an orange bar across the bottom of the screen. If you tap the orange bar, the system will present more information about the Hold.

   Correct the cause of the problem, and press the button on the screen to clear the Hold.
2. If a serious problem continues, the system will Lockout. A brief explanation of the cause of the Lockout will appear in an orange bar across the bottom of the screen. If you tap the orange bar, the system will present more information about the Lockout.

   Correct the cause of the problem, and press the Reset button.
3. If an Alert occurs while the system is running, the system will present a note across the bottom of the screen. If you tap the orange bar, the system will present more information about the Alert. Press the OK button to indicate that you have seen the Alert.
4. If an audible alarm on the display is active, you can use the Silence button to stop it.

11.A.2 Viewing the Lockout and Alert Histories

If your boiler is in a Lockout status, the Home Screen will be look like Menu 1

1. To view the Lockout/Alert history, start at the 'home' screen Menu 1.

Menu 1. 'Home' screen (shown in Lockout)

2. Touch the Control Icon in the center of the screen and the Status Summary Screen will appear.

Menu 2. Status Summary Menu

3. Press the long Yellow Alert or Yellow Lockout Bar (the long bar will be a long Grey '**History'** Bar if not currently in Alert or Lockout).

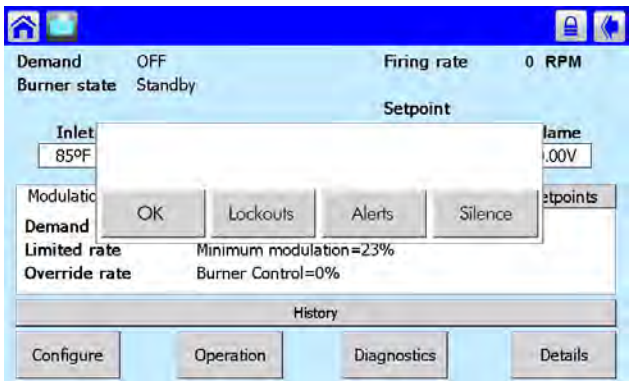

Menu 3. OK, Lockouts, Alerts, or Silence.

Choose which history list you would like to see.

OK: brings you back to the status summary screen.

LOCKOUTS brings you to a list of the last 15 lockout events.

ALERTS brings you to a list of the last 15 alerts.

SILENCE allows you to silence an alarm.

From here you can select 'OK' to back out of current screen or 'Lockouts' to bring up a list of the last 15 Lockout occurances. Press 'Alerts' to bring up a list of the last 15 Alerts, and 'Silence Alarm' in the event of a lockout condition. By silencing the alarm, the audible alert has been disabled. However, the Lockout is still active. Reset of the control is needed once the condition has been repaired.

If you choose 'ALERTS', this menu will appear.

Menu 4. Alert History

If you choose 'LOCKOUTS', this menu will appear.

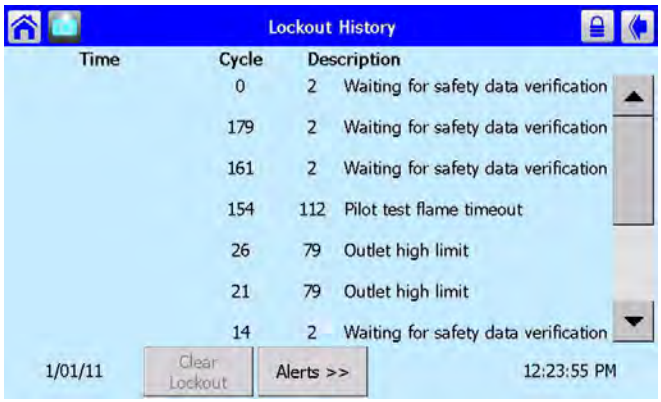

Menu 5. Lockout History

4. You can see more detailed information of an alert or lockout by touching the special entry on the screen.

Menu 6. Lockout History (showing selected)

Note: The most recent Lockout or Alert will be at the top of the menu list.

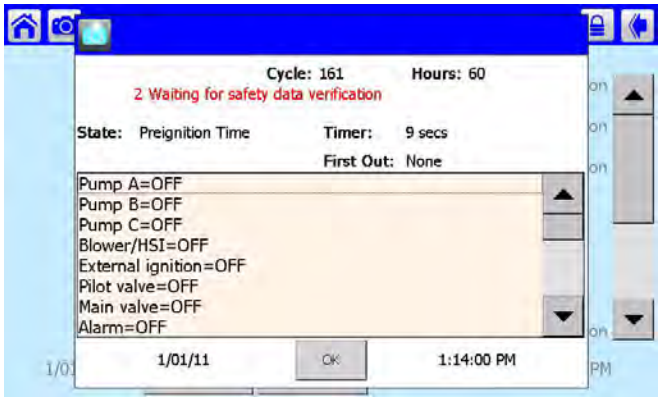

Menu 7. Lockout Detail

Return back to the Status Summary Menu by pressing the 'Back' arrow.

11.B Troubleshooting Table

This table includes a listing of the fault codes that may be displayed. Some of these can be corrected by changing a parameter, while other conditions are more complicated, and will require a service technician.

The first column lists the code number that will appear at the beginning of the Lockout or Hold message in the orange bar at the bottom of the screen. The second column lists the text as it will appear on the Touch Screen. The third column shows whether the condition will cause a Hold, or Lockout, or both. The fourth column lists some suggestions for corrective action.

Code	Description	Lockout or Hold	Procedure
1	Unconfigured safety data	L	1. New device, complete device configuration and safety verification. 2. If fault repeats, replace module
2	Waiting for safety data verification	L	1. Device in Configuration mode and safety parameters need verification and a device needs reset to complete verification. 2. Configuration ended without verification, re enter configuration, verify safety parameters and reset device to complete verification. 3. If fault repeats, replace module.
3	Internal fault: Hardware fault	H	Internal fault 1. Reset module 2. If fault repeats, replace module.
4	Internal fault: Safety Relay key feedback error	H	
5	Internal fault: Unstable power (DC DC) output	H	
6	Internal fault: Invalid processor clock	H	
7	Internal fault: Safety relay drive error	H	
8	Internal fault: Zero crossing not detected	H	
9	Internal fault: Flame bias out of range	H	
10	Internal fault: Invalid burner control state	L	
11	Internal fault: Invalid burner control state flag	L	
12	Internal fault: Safety relay drive cap short	H	
13	Internal fault: PII (Pre-Ignition Interlock) shorted to ILK (Interlock)	H or L	
15	Internal fault: Safety relay test failed due to feedback ON	L	

Code	Description	Lockout or Hold	Procedure
16	Internal fault: Safety relay test failed due to safety relay OFF	L	Internal fault 1. Reset module 2. If fault repeats, replace module.
17	Internal fault: Safety relay test failed due to safety relay not OFF	L	
18	Internal fault: Safety relay test failed due to feedback not ON	L	
19	Internal fault: Safety RAM write	L	
20	Internal fault: Internal fault: Flame ripple and overflow	H	
21	Internal fault: Flame number of sample mismatch	H	
22	Internal fault: Flame bias out of range	H	
23	Internal fault: Bias changed since heating cycle starts	H	
24	Internal fault: Spark voltage stuck low or high	H	
25	Internal fault: Spark voltage changed too much during flame sensing time	H	
26	Internal fault: Static flame ripple	H	
27	Internal fault: Flame rod shorted to ground detected	H	
28	Internal fault: A/D linearity test fails	H	
29	Internal fault: Flame bias cannot be set in range	H	
30	Internal fault: Flame bias shorted to adjacent pin	H	
31	Internal fault: SLO electronics unknown error	H	
32-46	Internal fault: Safety Key 0 through 14	L	
47	Flame Rod to ground leakage	H	
48	Static flame (not flickering)	H	

Code	Description	Lockout or Hold	Procedure
49	24 VAC voltage low/high	H	1. Check the module and display connections. 2. Check the module power supply and make sure that frequency, voltage and VA meet the specifications.
50	Modulation fault	H	Internal sub-system fault. 1. Review alert messages for possible trends. 2. Correct possible problems.
51	Pump fault	H	Internal sub-system fault. 1. Review alert messages for possible trends. 2. Correct possible problems.
52	Motor tachometer fault	H	Internal sub-system fault. 1. Review alert messages for possible trends. 2. Correct possible problems.
53	AC input phases reversed	L	1. Check the module and display connections. 2. Check the module power supply and make sure that both frequency and voltage meet the specifications. 3. On 24 VAC applications, assure that J4 terminal 10 and J8 terminal 2 are connected together.
59	Internal Fault: Mux pin shorted	L	Internal Fault. 1. Reset module. 2. If fault repeats, replace module.
61	Anti short cycle	H	Will not be a lockout fault. Hold Only.
62	Fan speed not proved	H	
63	Rollout switch, is regarding the **SAFETY CHAIN** (OFF) Could be one of the following: Flow Switch (Standard Equipment Sizes 399 and Up) Additional High Limit (Field Supplied) Optional Pressure Switch (Size 399 Only) Low Water Cut Off (Standard Equipment on All CSD-1 Models) Low Gas Pressure Switch – Inlet Side of Gas Valve (Standard Equipment on All CSD-1 Models) High Gas Pressure Switch – Outlet Side of Gas Valve (Standard Equipment on All CSD-1 Models) Condensate Level Switch – All Models	H	1. Reset the low gas pressure valve and the high gas pressure valve. 2. Check for power at Terminal Block 8 (TB8 for the 'Safety Chain' components. 3. Check wiring and correct any faults. 4. Check all safety interlocks connected to the safety circuit to assure proper function. 5. If code persists, contact Tech Support.

Code	Description	Lockout or Hold	Procedure
64	PII (Pre-Ignition Interlock) OFF	H or L	1. Check wiring and correct any faults. 2. Check Preignition Interlock switches to assure proper functioning. 3. Check the valve operation. 4. Reset and sequence the module; monitor the PII status. 5. If code persists, replace the module.
67	ILK (Interlock) OFF	H or L	1. Check wiring and correct any possible shorts. 2. Check Interlock (ILK) switches to assure proper function. 3. Verify voltage through the interlock string to the interlock input with a voltmeter. 4. If steps 1-3 are correct and the fault persists, replace the module.
68	ILK (Interlock) ON	H or L	
70	Wait for leakage test completion	H	1. Internal Fault. Reset module. 2. If fault repeats, replace module.
78	Demand Lost in Run	H	1. Check wiring and correct any possible errors. 2. If previous steps are correct and fault persists, replace the module.
79	Outlet high limit	H or L	1. Check wiring and correct any possible errors. 2. Replace the outlet high limit. 3. If previous steps are correct and fault persists, replace the module.
80	DHW (Domestic Hot Water) high limit	H or L	1. Check wiring and correct any possible errors. 2. Replace the DHW high limit. 3. If previous steps are correct and fault persists, replace the module.
81	Delta T limit	H or L	1. Check inlet and outlet sensors and pump circuits for proper operation. 2. Recheck the Delta T Limit to confirm proper setting. 3. If previous steps are correct and fault persists, replace the module.
82	Stack limit	H or L	1. Check wiring and correct any possible errors. 2. Replace the Stack high limit. 3. If previous steps are correct and fault persists, replace the module.
91	Inlet sensor fault	H	1. Check wiring and correct any possible errors. 2. Replace the Inlet sensor. 3. If previous steps are correct and fault persists, replace the module.

Code	Description	Lockout or Hold	Procedure
92	Outlet sensor fault	H	1. Check wiring and correct any possible errors. 2. Replace the Outlet sensor. 3. If previous steps are correct and fault persists, replace the module.
93	DHW (Domestic Hot Water) sensor fault	H	1. Check wiring and correct any possible errors. 2. Replace the DHW sensor. 3. If previous steps are correct and fault persists, replace the module.
94	Header sensor fault	H	1. Check wiring and correct any possible errors. 2. Replace the header sensor. 3. If previous steps are correct and fault persists, replace the module.
95	Stack sensor fault	H	1. Check wiring and correct any possible errors. 2. Replace the stack sensor. 3. If previous steps are correct and fault persists, replace the module.
96	Outdoor sensor fault	H	1. Check wiring and correct any possible errors. 2. Replace the outdoor sensor. 3. If previous steps are correct and fault persists, replace the module.
97	Internal Fault: A2D mismatch.	L	Internal Fault. 1. Reset module. 2. If fault repeats, replace module.
98	Internal Fault: Exceeded VSNSR voltage tolerance	L	
99	Internal Fault: Exceeded 28V voltage tolerance	L	
100	Pressure Sensor Fault	H	1. Verify the Pressure Sensor is a 4-20 ma source. 2. Check wiring and correct any possible errors. 3. Test Pressure Sensor for correct operation. 4. Replace the Pressure sensor. 5. If previous steps are correct and fault persists, replace the module.
105	Flame detected out of sequence	H or L	1. Check that flame is not present in the combustion chamber. Correct any errors. 2. Make sure that the flame detector is wired to the correct terminal. 3. Make sure the F & G wires are protected from stray noise pickup. 4. Reset and sequence the module, if code reappears, replace the flame detector. 5. Reset and sequence the module, if code reappears, replace the module.

Code	Description	Lockout or Hold	Procedure
106	Flame lost in MFEP	L	1. Check main valve wiring and operation - correct any errors. 2. Check the fuel supply. 3. Check fuel pressure and repeat turndown tests. 4. Check ignition transformer electrode, flame detector, flame detector siting or flame rod position. 5. If steps 1 through 4 are correct and the fault persists, replace the module.
107	Flame lost early in run	L	
108	Flame lost in run	L	
109	Ignition failed	L	
110	Ignition failure occurred	H	Hold time of recycle and hold option. Will not be a lockout fault. Hold Only. Internal hardware test. Not a lockout.
111	Flame current lower than weak threshold (min flame current 0.8mA).	H	Hold time of recycle and hold option. Will not be a lockout fault. Hold Only. Internal hardware test. Not a lockout.
113	Flame circuit timeout	L	Flame sensed during Initiate or off cycle, hold 240 seconds, if present after 240 seconds, system will lockout.
119	Control Interaction Fault	H	Flap valve identifications configured incorrectly.
122	Lightoff rate proving failed	L	1. Check wiring and correct any potential wiring errors. 2. Check the VFDs (Variable-speed Fan Drive) ability to change speeds. 3. Change the VFD 4. If the fault persists, replace the module.
123	Purge rate proving failed	L	
128	Fan speed failed during prepurge	H or L	
129	Fan speed failed during preignition	H or L	
130	Fan speed failed during ignition	H or L	
131	Fan movement detected during standby	H	
132	Fan speed failed during run	H	
137	ILK (Interlock) failed to close	H	1. Check wiring and correct any possible shorts. 2. Check Interlock (ILK) switches to assure proper function. 3. Verify voltage through the interlock string to the interlock input with a voltmeter. 4. If steps 1-3 are correct and the fault persists, replace the module.
149	Flame detected	H or L	Holds if flame detected during Safe Start check up to Flame Establishing period.
150	Flame not detected	H	Sequence returns to standby and restarts sequence at the beginning of Purge after the HF switch opens if flame detected during Safe Start check up to Flame Establishing period.
154	Purge Fan switch On	H or L	1. Purge fan switch is on when it should be off. 2. Check wiring and correct any errors. 3. Inspect the Purge Fan switch J6 terminal 3 and its connections. Make sure the switch is working correctly and is not jumpered or welded. 4. Reset and sequence the relay module. 5. If the fault persists, replace the relay module.

Code	Description	Lockout or Hold	Procedure
155	Purge fan switch OFF	H or L	1. Purge fan switch is off when it should be on. 2. Check wiring and correct any errors. 3. Inspect the Purge Fan switch J6 terminal 3 and its connections. Make sure the switch is working correctly and is not jumpered or welded. 4. Reset and sequence the relay module. 5. If the fault persists, replace the relay module.
156	Combustion pressure and flame ON	H or L	1. Check that flame is not present in the combustion chamber. Correct any errors. 2. Make sure that the flame detector is wired to the correct terminal. 3. Make sure the F & G wires are protected from stray noise pickup. 4. Reset and sequence the module, if code reappears, replace the flame detector. 5. Reset and sequence the module, if code reappears, replace the module.
157	Combustion pressure and flame OFF	L	
158	Main valve ON	L	1. Check Main Valve terminal wiring and correct any errors. 2. Reset and sequence the module. If fault persists, replace the module.
159	Main valve OFF	L	
160	Ignition ON	L	1. Check Ignition terminal wiring and correct any errors. 2. Reset and sequence the module. If fault persists, replace the module.
161	Ignition OFF	L	
164	Block intake ON	L	1. Check wiring and correct any errors. 2. Inspect the Block Intake Switch to make sure it is working correctly. 3. Reset and sequence the module. 4. During Standby and Purge, measure the voltage across the switch. Supply voltage should be present. If not, the Block Intake Switch is defective and needs replacing. 5. If the fault persists, replace the relay module.
165	Block intake OFF	L	
172	Main relay feedback incorrect	L	Internal Fault. 1. Reset module. 2. If fault repeats, replace module.
174	Safety relay feedback incorrect	L	
175	Safety relay open	L	
176	Main relay ON at safe start check	L	
178	Safety relay ON at safe start check	L	
565	Control looking for outdoor sensor	H	Ensure Outdoor Sensor is properly connected.
981	Display not communicating with control		Refer to wire diagram (7G) to ensure display and control are wired properly.

11.C Diagnostic Tests and Input/ Output Indicators

Two kinds of screens are grouped together in this section:

- Detailed indications of the input and output signals
- Diagnostic tests of the pumps and burner modulation

Note that these functions apply to just one selected controller.

To access the diagnostic functions, from the home screen, touch the control icon, then touch the 'Diagnostics' button.

1. The buttons at the bottom of the screen select the types of inputs and outputs displayed. The Burner Control I/O button leads to Menu 8

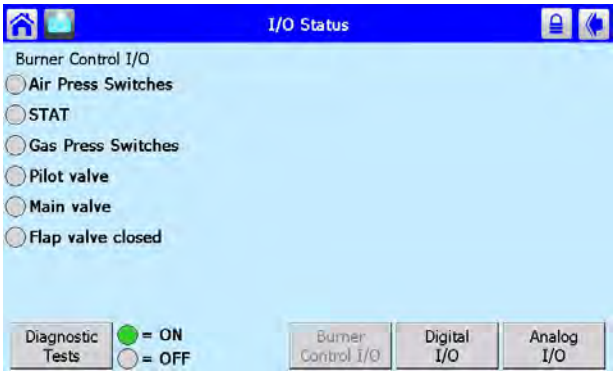

Menu 8. Burner Control I/O Screen

A green dot indicates a function that is "on."

2. Press the Digital I/O button to see parameters with the functions that are either "on" or "off." See Menu 9.

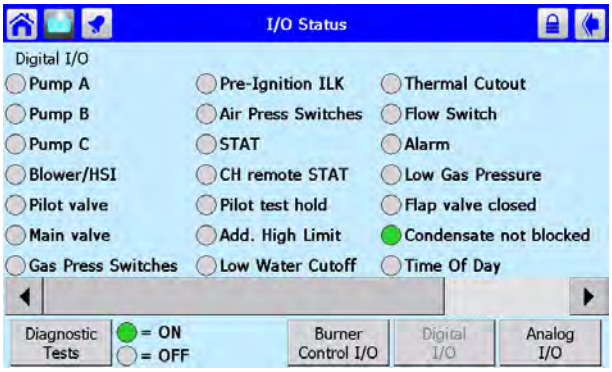

Menu 9. Digital I/O Screen

3. The button for Analog I/O displays items that change continuously between two limits. See Menu 10

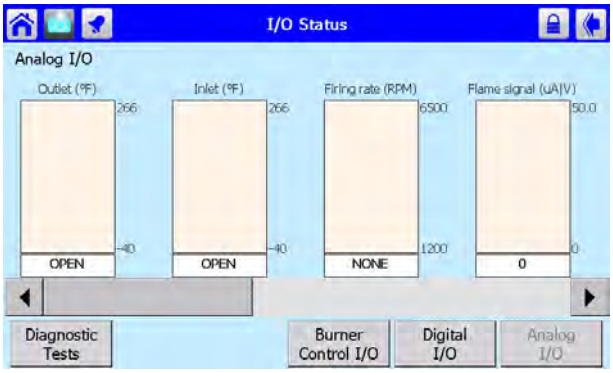

Menu 10. Analog I/O Screen

4. Press the button for Diagnostic Tests. The Modulation test allows you to change the rate at which the burner fires, and watch the results. See Menu 11

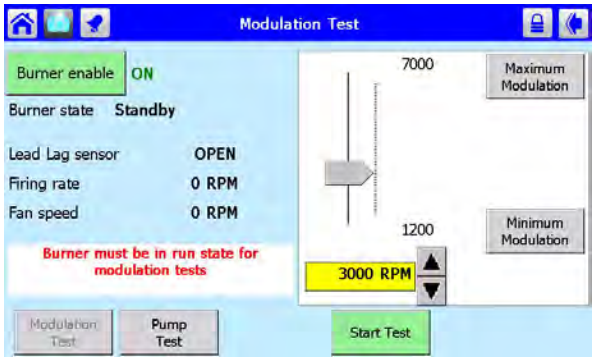

Menu 11. Modulation Test

5. Press the Pump Test button. The Pump test shows detailed information about the three pumps that may be used by the system.

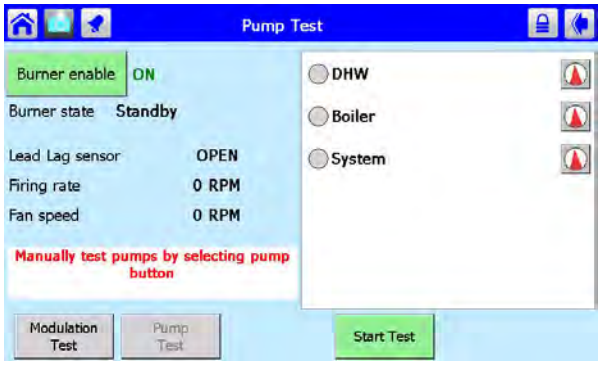

Menu 12. Pump Test

11.D Lead/Lag Slave Diagnostics

The control system includes a diagnostic screen that lists some information on the Lead/Lag slaves in the system. See Menu 13

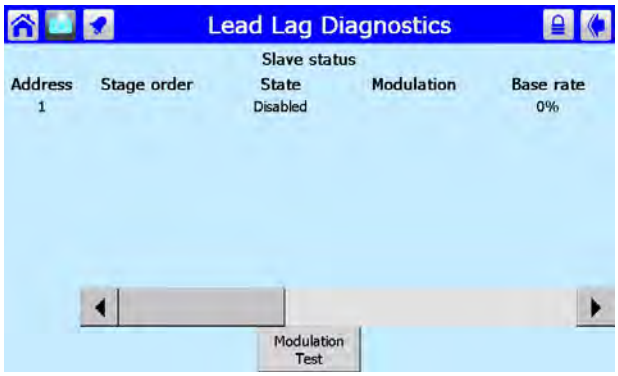

Menu 13. Lead/Lag Diagnostics

Use the left- and right-arrows to see all of the columns in the display.

11.E Statistics

The controller can present some summary information about the operation of the system – number of pump cycles, number of burner cycles, etc.

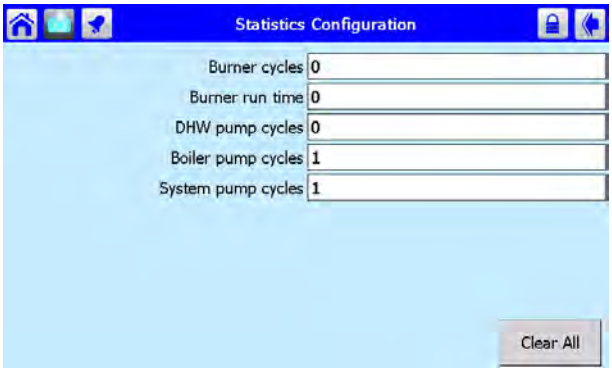

Menu 14. Statistics Configuration Screen

11.F Analysis

The control system includes an Analysis branch that can display the behavior over a period of time for several different parameters: fan speed, outlet temperature, inlet temperature, etc.

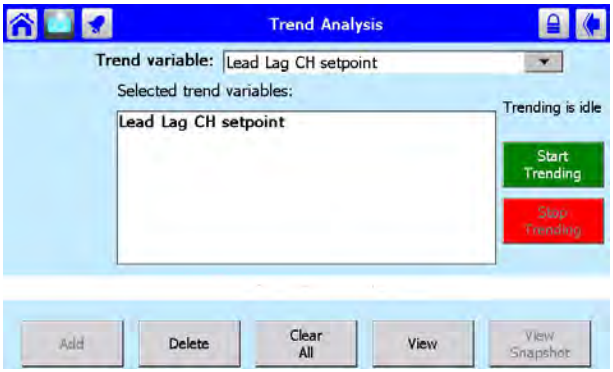

Menu 15. Analysis Setup Screen

To use this function, select the parameter you want to track from the pull-down list. The system will present a graph that tracks that variable.

To see the graph for the currently-selected function, press the View button.

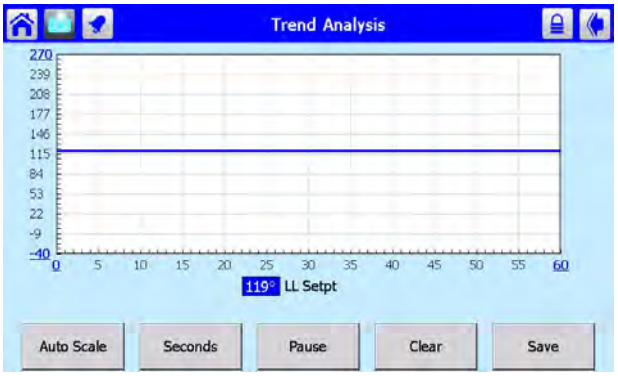

Menu 16. Trend Analysis Graph

The time scale can be adjusted by pressing the Seconds button in the lower left-hand corner.

11.G Control Snapshot

The software allows you to take a “snapshot” of the current state of the controller, including setup information and operating information. This information can be helpful during troubleshooting.

Menu 17 shows the Control Snapshot screen.

Menu 17. Control Snapshot List Screen

Select one of the controllers listed on the right side of the screen. Press one of the buttons below the right column to see the snapshot. See Menu 18.

Menu 18. Typical Control Snapshot

The Show Status button captures the current status of the I/O of the control only. Show Configuration captures the current parameter settings and the control setup. You can save the snapshot, give it a name, or send a copy to the USB port.

11.H Operating Sequence

When there is a call for heat, the unit will close pump contacts to energize the customer supplied relay/ contactor to start water flow. Once the LCI circuit (flow switch, gas pressure switches, LWCO, and High Limit aquastats) are completed the unit will start the blower and begin the ignition sequence. The unit is equipped with a low and high fire air pressure switch. The unit will pre-purge at 65% fan for 30 seconds and prove fan through the blocked intake switch. Once fan is proven, the blower will proceed to 24% and the 10 second Pre-ignition timer will begin to make the ignitor spark.
Once the Pre-ignition timer has expired the control will open the Pilot solenoid and the Pilot Flame Establishing Period (PFEP) will start for 10 seconds to establish flame. Once flame has been established and the 10 second timer has expired the control will open the main valve and the Main Flame Establishing Period will begin for a period of 5 seconds. If flame is established within those 5 seconds then unit will proceed to Run, if flame does not establish the unit will post-purge to 100% for 30 seconds and the sequence for ignition will begin again. For Non CSD-1 units retry for ignition is 3 times before Lockout 109 (Ignition Failure) occurs. For CSD-1 units there is a single retry before Lockout 109 occurs.

Section 12 - REPLACEMENT PARTS

Use only genuine replacement parts.

12.A General Information

To order or purchase parts, contact your nearest manufacturer's dealer or distributor. If they cannot supply you with what you need, contact Customer Service. (See the back cover for the address, telephone and fax numbers.)

12.B Parts List

ITEM	SIZE DESCRIPTION	SIZE --- HEATER150	SIZE --- HEATER 199	SIZE --- HEATER 285	SIZE BOILER 399 HEATER 399	SIZE BOILER 500 HEATER 500	SIZE BOILER 600 HEATER 600	SIZE BOILER 750 HEATER 750	SIZE BOILER 850 HEATER 850
Jacket Components – *See Parts Illustration 2*									
1	Front Panel Assembly	R60D3200	R60D3200	R60D3200	R60D3201	R60D3202	R60D3202	R60D3202	R60D3202
2	Front Panel Handle	R50D3204	R50D3204	R50D3204	R50D3204	R50D3204	R50D3204	R50D3204	R50D3204
3	Front Panel (outdoor)	85D3200	85D3200	85D3200	85D3200	85D3200	85D3200	85D3200	85D3200
4	Hasp (outdoor)	1-546	1-546	1-546	1-546	1-546	1-546	1-546	1-546
12	Front Bezel	R50D7121	R50D7121	R50D7121	R50D7121	R50D7121	R50D7121	R50D7121	R50D7121
13	Touchscreen Display	E2339800	E2339800	E2339800	E2339800	E2339800	E2339800	E2339800	E2339800
Internal Components – *See Parts Illustration 4* and Parts Illustration 5									
20	Base Assembly	R15D1100	R15D1100	R30D1100	R40D1100	R50D1100	60D1100	75D1100	85D1100
21	Left Rear Support Stanchion	R50D1001	R50D1001	R50D1001	R50D1001	R50D1001	R50D1001	R50D1001	R50D1001
22	Left Front/Right Rear Support Stanchion	R50D1002	—	R50D1002 (2)	R50D1002 (2)	R50D1002 (2)	R50D1002 (2)	R50D1002 (2)	R50D1002
23	Cantilevered Base Stanchion	R15D1002	R40D1001	R40D1001	R40D1001	R40D1001	R50D1003	75D1002	75D1002
24	Brace, Front, HX Stanchion	20D1005	20D1005	85D1005	85D1005	85D1005	60D1005	85D1005	85D1005
24A	Brace, Rear, HX Stanchion	20D1007	20D1007	R50D1005	85D1005	85D1005	85D1005	85D1005	85D1005
25	Mounting Rail	R15D1004 (2)	R30D1004 (2)	R30D1004 (2)	40D1004 (2)	R50D1004 (2)	R50D1004 (2)	75D1004 (2)	85D1004 (2)
26A	Diagonal Brace	—	—	—	—	—	—	75D1006	75D1006
27	Condensate Trap Assy	R20D4020	R20D4020	R50D4020	R50D4020	R50D4020	R2075701	R2075701	R2075701
28	Heat Exch. Rail Clip	—	—	R50D1006 (2)	—	—	—	—	—
30	PVC Reducer	RP2053000	RP2053000	RP2052900	RP2052800	50D4027	RP2052800	RP2052800	RP2052800
30a	CPVC Reducer or Coupling	RP2065600	RP2065600	—	—	—	—	—	—
30b	2" Dia. Pipe, CPVC	RD2010213	RD2010213 Heater RD2010213 Boiler	—	—	—	—	—	—
31	Hose Barbed Adapter	RP2056100	RP2056100	RP2056100	—	—	—	—	—
33	Air Inlet/Exhaust Bracket	R20D3120	R20D3120	30D3505	40D3005	85D3005	85D3005	85D3005	85D3005
Parts Illustration 1. Gas Train Components – *See Parts Illustration 6 and Parts Illustration 7*									
40	Combustion Air Blower	RA2107500	RA2114200	RA2114200	RA2113100	RA2113100	R2012101	R2012101	R2012101
41	Gas Valve/Venturi	RV2017902	RV2017903	RV2017904	—	—	—	—	—
42	Gas Valve	—	—	—	RV2019200	V2019600	V2019700	V2019700	V2019700

ITEM	DESCRIPTION	SIZE --- HEATER 150	SIZE --- HEATER 199	SIZE --- HEATER 285	SIZE BOILER 399 HEATER 399	SIZE BOILER 500 HEATER 500	SIZE BOILER 600 HEATER 600	SIZE BOILER 750 HEATER 750	SIZE BOILER 850 HEATER 850
43	Gas/Air Venturi	—	—	—	—	RA2116700	A2115000	A2115000	A2115000
44	Manual Gas Valve	—	—	—	RV2000200	V2003000 (2)	V2003000	V2003200	V2003200
44A	Manual Gas Valve	—	—	—	—	RV2000200	—	V2003000	V2003000
45	Gas Valve Flange Kit	—	—	—	—	RP2050100	RP2050100	RP2050100	RP2050100
46	Gas Valve/Venturi Cork Gasket	—	—	—	—	RS2104900	RS2104900	RS2104900	RS2104900
47	Gas Valve O-Ring	R30-227	R30-227	R30-227	—	—	—	—	—
48	Venturi O-Ring	—	—	—	RS2105200	RS2105200	RS2105200	RS2105200	RS2105200
49	High Gas Pressure Switch	—	—	—	—	R50D5014	R50D5013	R75D5014	R75D5014
50	Low Gas Pressure Switch	—	—	—	—	R50D5015	R50D5012	R75D5015	R75D5015
51	Duct/Venturi Transition	R10D5021	R10D5013	R30D5013	—	R50D5017	R60D5052	R60D5052	R85D5052
52	Gas Supply Pipe	RP2051400	RP2051400	RP2051500	P2054300	P2054300	P2054300	P2064200	P2064200
53	Gas Pipe, 3/4" NPT Formed Nipple	—	—	—	RP2056500	—	—	—	—
54	On/Off Module	E2324300	E2324300	E2324300					
55	Air Inlet Flex Hose	RD0091403	D0091401	D0091401	RD0091202	D0091301	RD0091201	RD0091203	RD0091203
56	Air Inlet Collector	—	—	—	RV2019400	—	—	—	—
57	Electrical Connector w/Cable	—	—	—	RE2331700	RE2331700	—	—	—
58	Elbow Adapter	—	—	—	RV2019300	RV2019300	—		
59	Blower Gasket w/Fasteners	—	—	—	—	—	RS2107500	RS2107500	RS2107500
Heat Exchanger Components – *See Parts Illustration 8*									
60	Heat Exchanger, Boiler	—	—	—	RS2111200	RS2111300	RS2111300	RS2111400	RS2111500
	Heat Exchanger, Heater	RS2105800	RS2111000	RS2111100	RS2111200	RS2111300	RS2111310	RS2111400	RS2111500
	Pump (Optional), Boiler (Not Shown)	—	—	—	A2114400	A2135410	A2133621	A2133621	A2133621
	Pump (Optional), Heater (Not Shown)	A2135600	A2135700	A2135500	A2135420	A2135420	A2133616	A2133616	A2133616
62	Low Water Cutoff Switch	CA004805	CA004805	CA004804	CA015604	RE2076500	RE2076500	RE2076500	RE2076500
63	Inlet Water Temp Sensor	RE2320600	RE2320600	RE2320600	RE2320600	RE2320600	RE2320600	RE2320600	RE2320600
64	Duplex Outlet Water Temperature Sensor	RE2319900	RE2319900	RE2319900	RE2319900	RE2319900	RE2319900	RE2319900	RE2319900
65	Duplex Stack Temperature Sensor	RE2319700	RE2319700	RE2319800	RE2319800	RE2319800	RE2319800	RE2319800	RE2319800
66	Pressure Relief Valve, Boiler	— —	— —	— —	RA2138800 (75 PSI)	RA2138800 (75 PSI)	RA2138800 (75 PSI)	RA2138800 (75 PSI)	RA2138800 (75 PSI)
	Pressure Relief Valve, Heater	RA2138900 (125 PSI)	RA2138900 (125 PSI)	RA2138900 (125 PSI)	RA2138900 (125 PSI)	RA2138900 (125 PSI)	RA2138900 (125 PSI)	RA2138900 (125 PSI)	RA2138900 (125 PSI)
67	Air Vent	R1-592	R1-592	R1-592	R1-592	R1-592	R1-592	R1-592	R1-592
68	Burner Door w/gasket	RS2112801	RS2112801	RS2112801	RS2112801	RS2112801	RS2112801	RS2115301	RS2115301
68A	Gasket-only (rubber only)	R2069400	R2069400	R2069400	R2069400	R2069400	R2069400	R2077400	R2077400
69	Burner Gasket	RS2108500	RS2108500	RS2108500	RS2108500	RS2108500	RS2108500	S2113000	S2113000
69A	Gasket Set (burner gasket, ignitor gasket, sensor gasket & rubber door gasket)	RS2109100	RS2109100	RS2109100	RS2109100	RS2109100	RS2109100	R2077600	R2077600
70	Front Refractory Tile	RT2109001	RT2109001	RT2109001	RT2109001	RT2109001	RT2109001	T2110300	T2110300
71	Rear Refractory Tile	R50D2021	R50D2021	R50D2021	R50D2021	R50D2021	R50D2021	R50D2021	R50D2021
72	Main Burner w/gasket	R2069103	R2069104	R2069105	R2069106	R2069106	R2069107	R2069108	R2069109

ITEM	DESCRIPTION	SIZE --- HEATER 150	SIZE --- HEATER 199	SIZE --- HEATER 285	SIZE BOILER 399 HEATER 399	SIZE BOILER 500 HEATER 500	SIZE BOILER 600 HEATER 600	SIZE BOILER 750 HEATER 750	SIZE BOILER 850 HEATER 850
73	Flame Sensor w/gasket	R2069200	R2069200	R2069200	R2069200	R2069200	R2069200	R2071400	R2071400
74	Ignitor w/gasket	R2069300	R2069300	R2069300	R2069300	R2069300	R2069300	R2071500	R2071500
74A	Ignitor Gasket	RW2013300	RW2013300	RW2013300	RW2013300	RW2013300	RW2013300	RW2013300	RW2013300
74B	Screw, Ignitor/ Flame Sensor	m4-.7X8mm S2112700	m4-.7X8mm S2112700	m4-.7X8mm S2112700	m4-.7X8mm S2112700	m4-.7X8mm S2112700	m4-.7X8mm S2112700	m4-.7X8mm S2112700	m4-.7X8mm S2112700
74C	Flame/Sensor Gasket	RW2013400	RW2013400	RW2013400	RW2013400	RW2013400	RW2013400	RW2013400	RW2013400
75	Air/Gas Channel (80-600)	RS2108600	RS2108700	RS2108700	RS2108700	RS2108801	RS2108801	—	—
	Air Adapter (750-850)	—	—	—	—	—	—	RS2115400	RS2115400
75A	Screw, Air/Gas Channel	RS2109400 (5)	RS2109400 (5)	RS2109400 (5)	RS2109400 (5)	RS2109400 (5)	RS2109400 (5)	RF2029200 (5)	RF2029200 (5)
76	Drain	R10-143	R10-143	R10-143	R10-143	R10-143	R10-143	R10-143	R10-143
77	Sight Glass	R50D2020	R50D2020	R50D2020	R50D2020	R50D2020	R50D2020	R50D2020	R50D2020
Electrical Components – *See Parts Illustration 9*									
80	Control Panel Enclosure	R50D7001	R50D7001	R50D7001	R50D7001	R50D7001	R50D7001	R50D7001	R50D7001
81	Transformer	RE2108700	RE2108700	RE2108700	RE2108700	RE2108700	RE2108700	RE2108700	RE2108700
82	High Voltage Shield	R50D7002	R50D7002	R50D7002	R50D7002	R50D7002	R50D7002	R50D7002	R50D7002
83	Top Panel Bracket	R50D7003	R50D7003	R50D7003	R50D7003	R50D7003	R50D7003	R50D7003	R50D7003
84	Control								
NTH	Standard	RXD7198	RXD7198	RXD7234	RXD7202	RXD7203	RXD7204	RXD7204	RXD7205
NTH	CSD-1	---	---	---	---	RXD7206	RXD7207	RXD7207	RXD7208
NTV	Standard	RXD7200	RXD7201	RXD7234	RXD7202	RXD7203	RXD7204	RXD7204	RXD7205
NTV	CSD-1	---	---	---	---	RXD7206	RXD7207	RXD7207	RXD7208
85	Rocker Switch	RE2322700	RE2322700	RE2322700	RE2322700	RE2322700	RE2322700	RE2322700	RE2322700
86	On / Off (outdoor)	E2349900	E2349900	E2349900	E2349900	E2349900	E2349900	E2349900	E2349900
87	Wire Harness	R50D7412	R50D7414	R50D7408	R50D7406	R50D7402	R50D7410	R50D7409	R50D7409
89	Air Pressure Switch	RE2334700	RE2334701	RE2334700	—	RE2334700	RE2334700	RE2334701	RE2334700
90	Water Flow Switch	—	—	—	R2008400	R2008400	R2008400	R2008400	R2008400
91	Thermo Switch			RE2353601	RE2353601	RE2353601	RE2353601	RE2353601	RE2353601
92	Thermo Fuse (back)			RE2354000	RE2354000	RE2354000	RE2354000	RE2354000	RE2354000

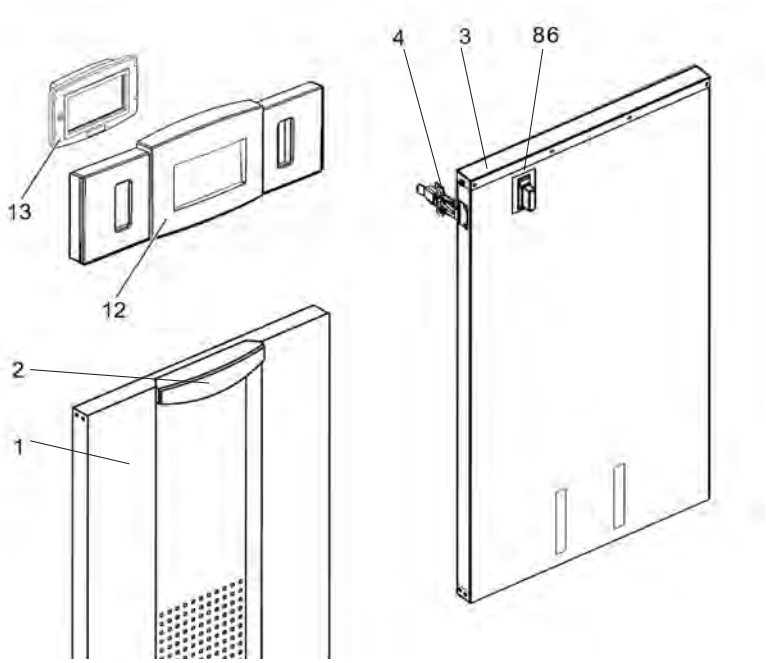

Parts Illustration 2. Jacket Components

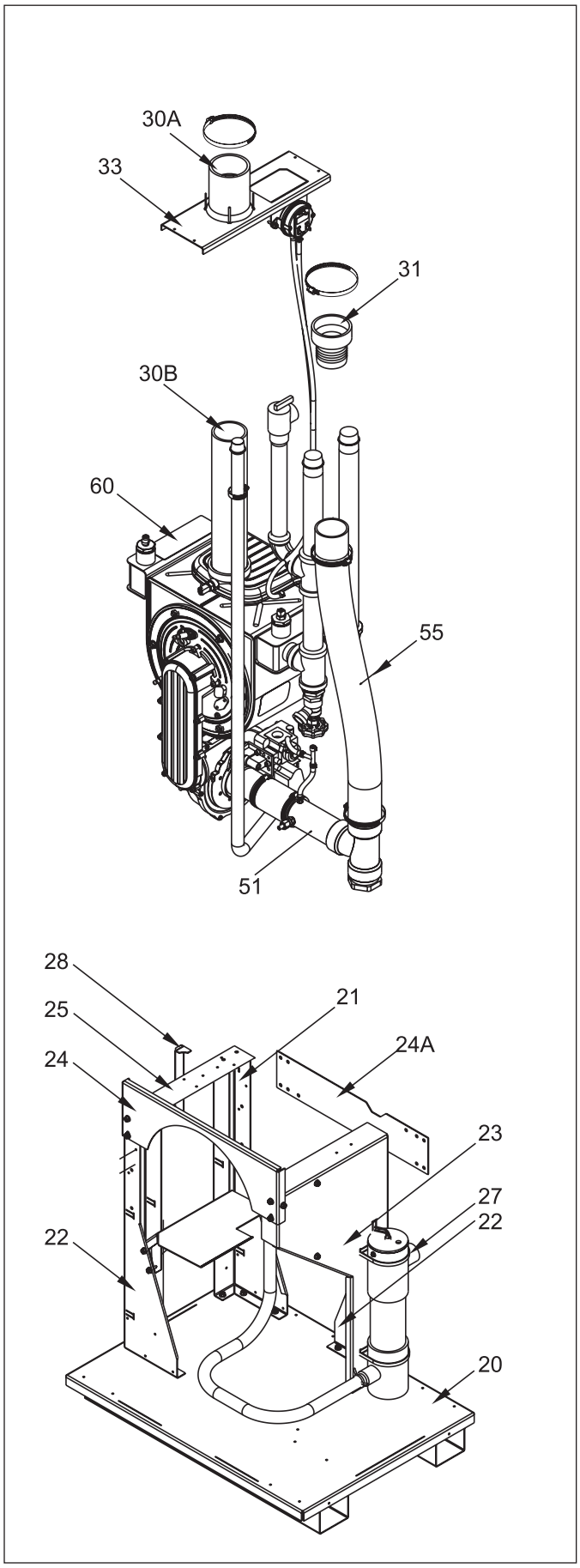

Parts Illustration 3. Internal Components, Sizes 150–199

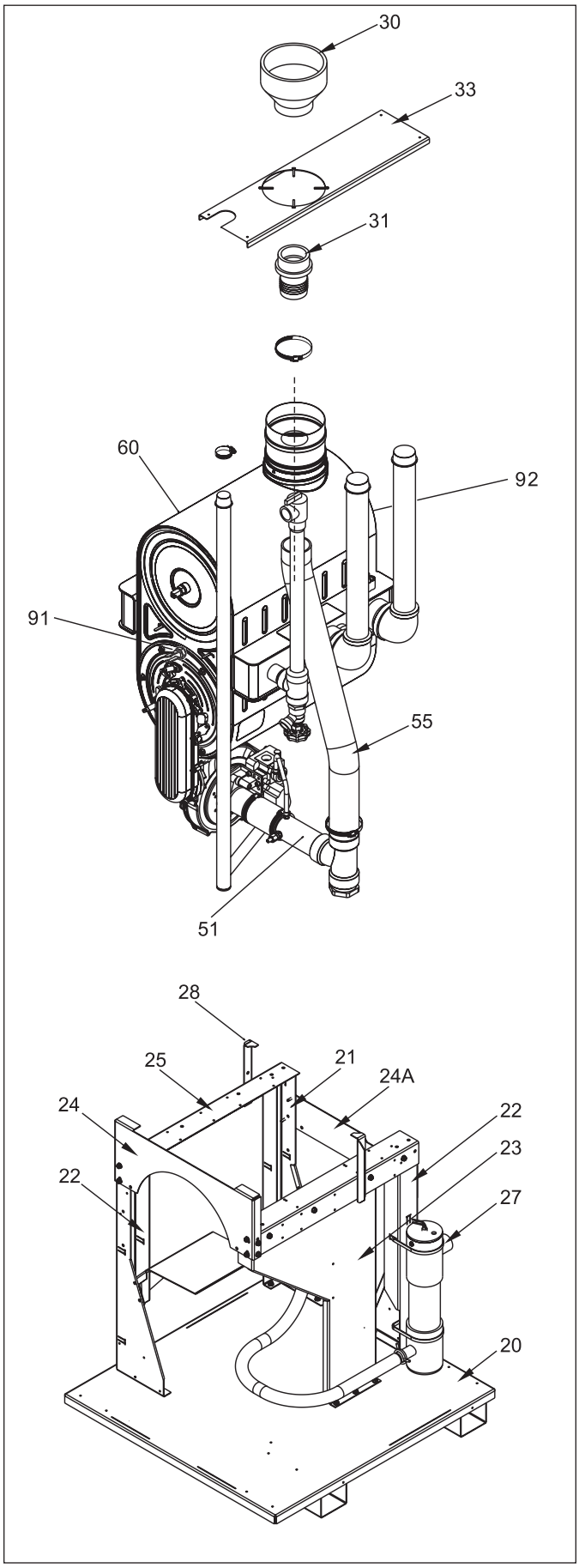

Parts Illustration 4. Internal Components, Sizes 285–600

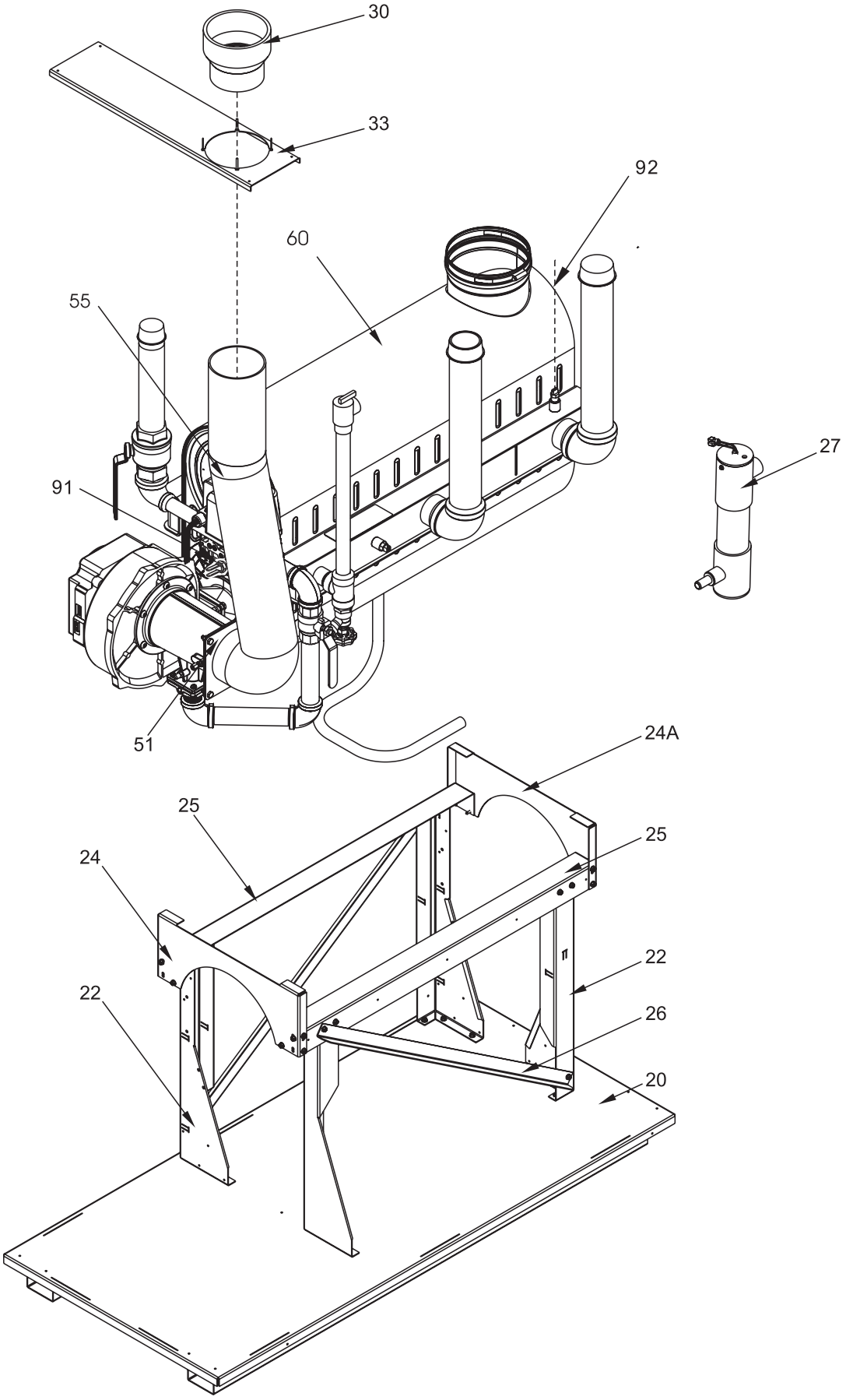

Parts Illustration 5. Internal Components, Sizes 750-850

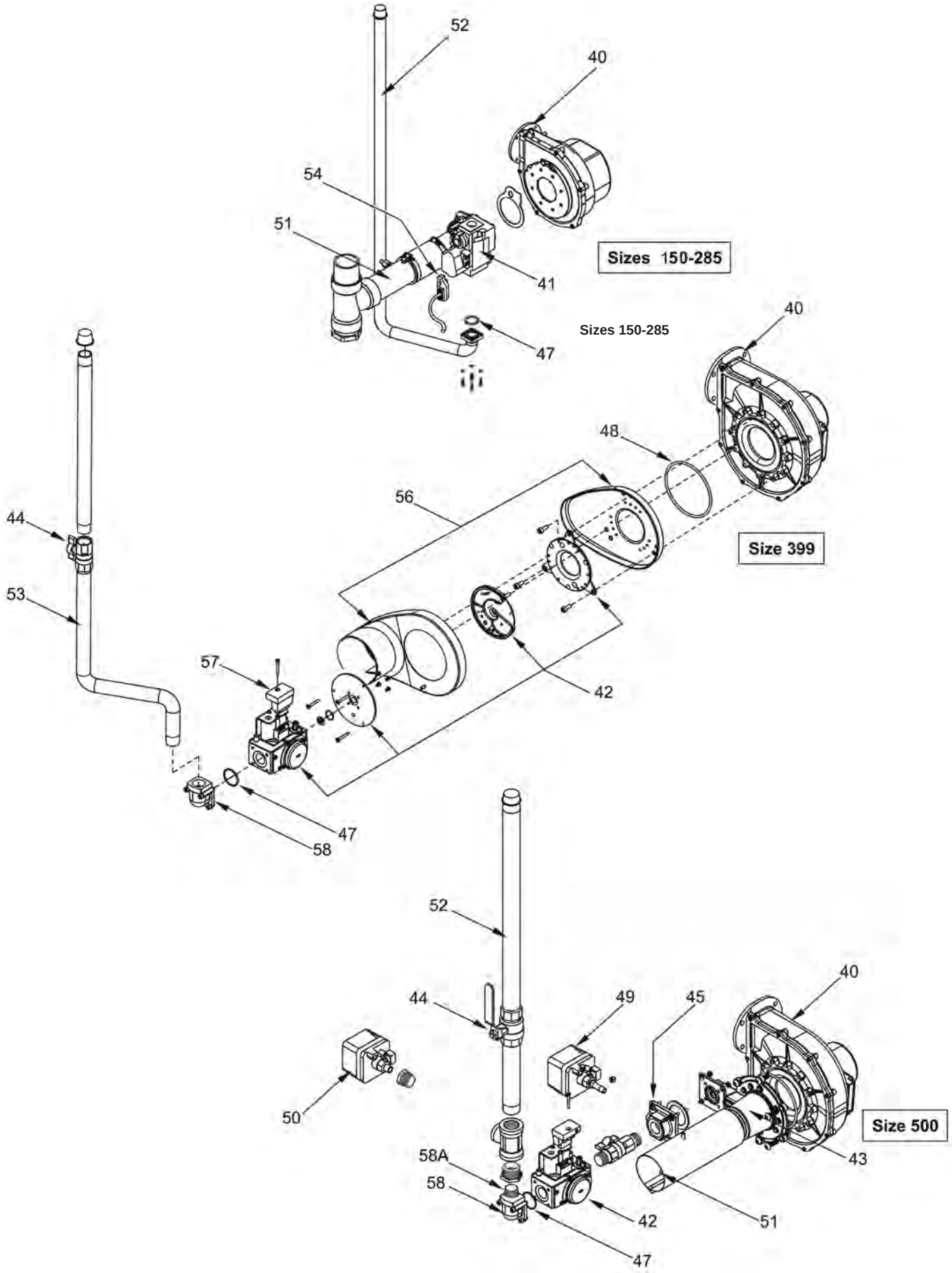

Parts Illustration 6. Gas Train Components, Sizes 150-500

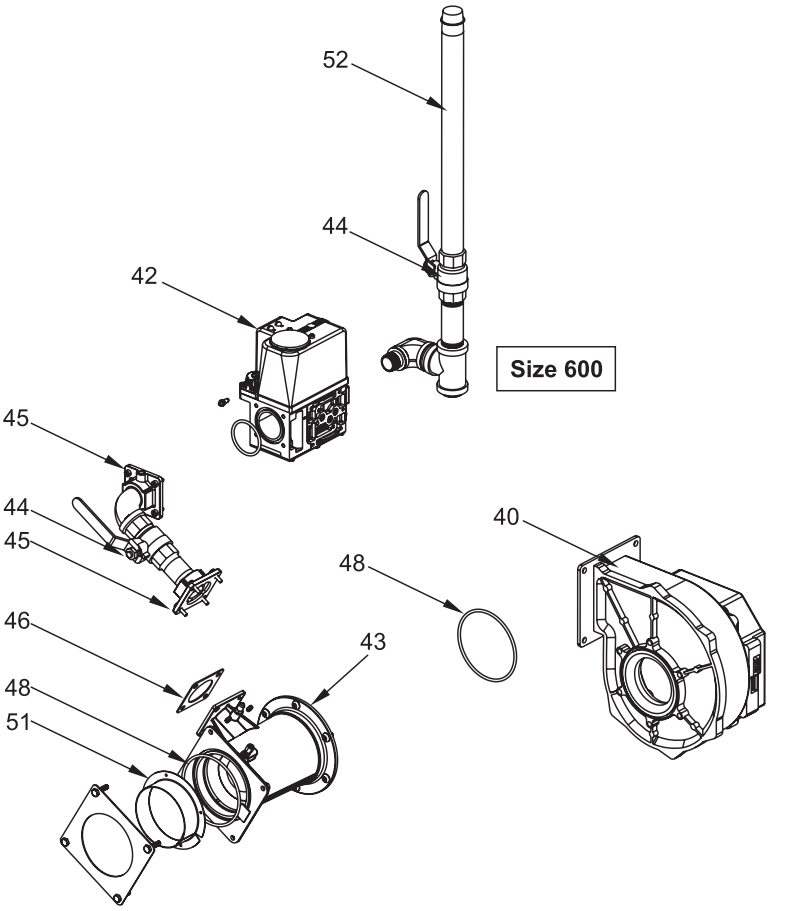

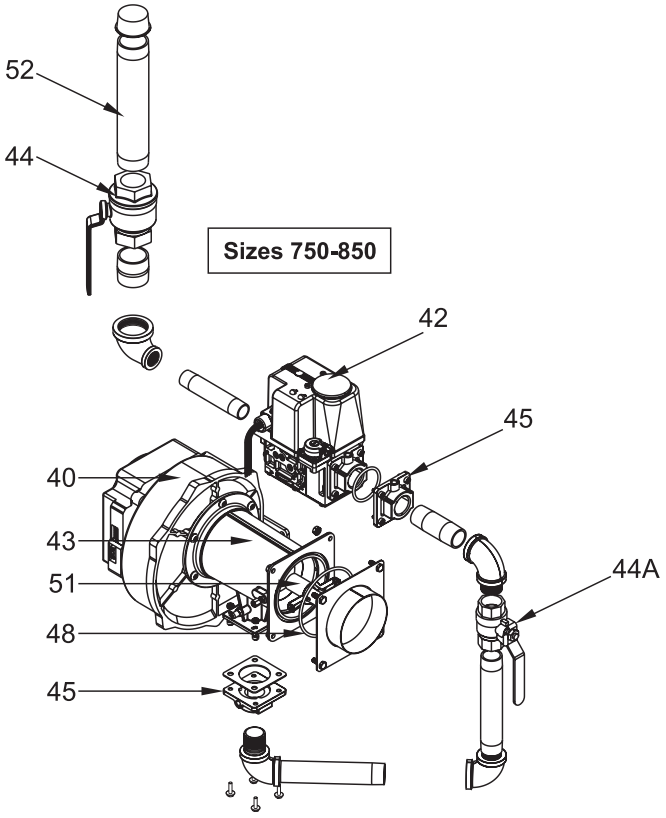

Parts Illustration 7. Gas Train Components, Sizes 600-850

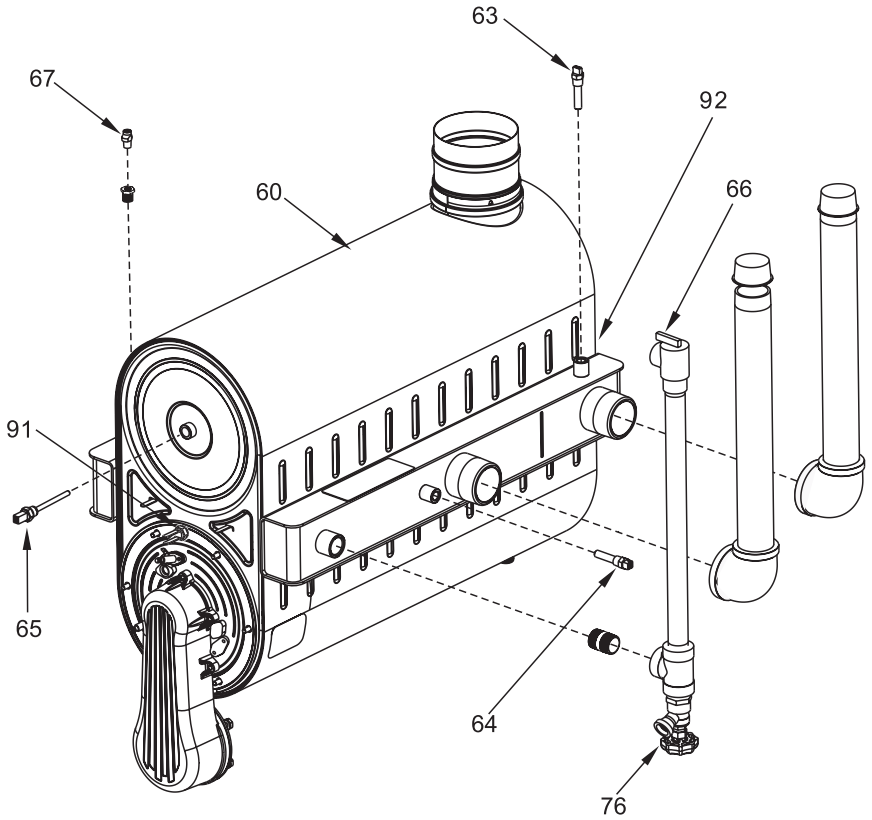

Sizes 285 -

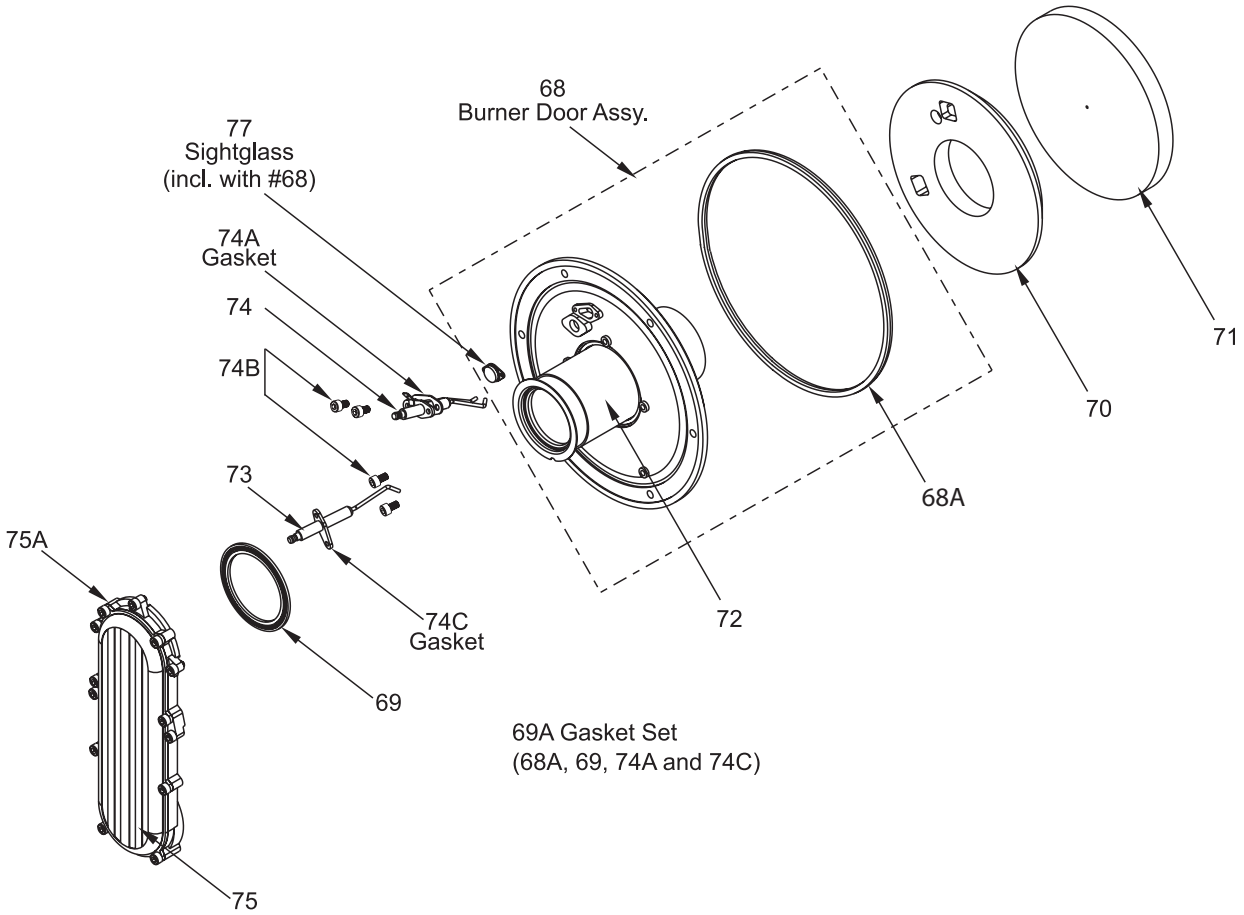

Parts Illustration 8. Heat Exchanger Components

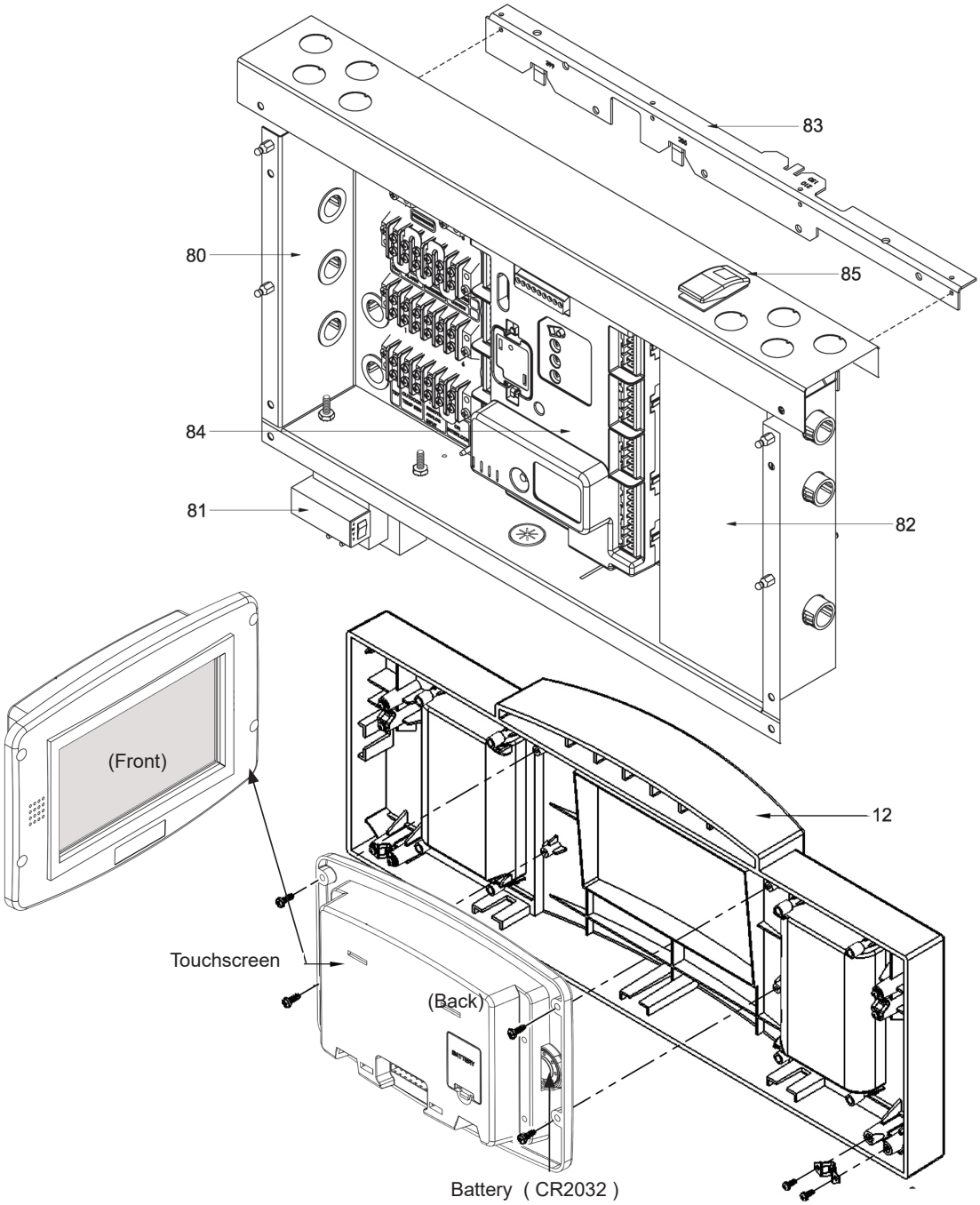

All Manuals (Install & Operate, Start Up, and Service Manuals) can be downloaded at

www.laars.com

For LAARS Product and Service VIDEOS

https://www.youtube.com/user/LaarsHeating

Parts Illustration 9. Electrical Components

Dimensions and specifications subject to change without notice in accordance with our policy of continuous product improvement.

Low Lead Content NSF/ANSI 372

H

HLW

H2374100K

LAARS Heating Systems Company

Customer Service and Product Support: **800.900.9276 • Fax 800.559.1583**

Headquarters: **20 Industrial Way, Rochester, NH, USA 03867 • 603.335.6300 • Fax 603.335.3355**

9 Brigden Gate, Halton Hills, Ontario, Canada L7G 0A3 (905) 203-0600 Fax: (905) 636-0666

www.Laars.com

Printed in U.S.A. © Laars Heating Systems 23-06 Document 1330K